Phaser® 6510, WorkCentre® 6515
Service Manual

Xerox Internal-Use Only

Xerox Phaser 6510 Color Printer/WorkCentre 6515 Color Multifunction Printer

Service Documentation

Phaser 6510 Color Printer/WorkCentre 6515 Color Multifunction Printer Service Manual

705P01382

Initial Issue - Xerox Internal Use Only

11/2016

Xerox Corporation

Digital, Creative, and Language Services

26600 Parkway - Bldg. 60

P.O. Box 1000, M/S 7060-355

Wilsonville, OR 97070-1000

NOTICE: All service documentation is supplied to Xerox external customers for informational purposes only. Xerox service documentation is intended for use by certified, product trained service personnel only. Xerox does not warrant or represent that such documentation is complete, nor does Xerox represent or warrant that it will notify or provide to such customer any future changes to this documentation. Customer performed service of equipment, or modules, components or parts of such equipment may affect the warranty offered by Xerox with respect to such equipment. You should consult the applicable warranty for its terms regarding customer or third party provided service. If the customer services such equipment, modules, components or parts thereof, the customer releases Xerox from any and all liability for the customer actions, and the customer agrees to indemnify, defend and hold Xerox harmless from any third party claims which arise directly or indirectly from such service.

Unpublished rights reserved under the copyright laws of the United States. Contents of this publication may not be reproduced in any form without permission of Xerox Corporation.

Copyright protection claimed includes all forms of matters of copyrightable materials and information now allowed by statutory or judicial law or hereinafter granted, including without limitation, material generated from the software programs which are displayed on the screen such as styles, templates, icons, screen displays, looks, etc.

Xerox technical training materials and service manuals are intended for use by authorized Xerox service technicians and service partners only and are not for resale. These materials may not be distributed, copied or otherwise reproduced without prior written consent from Xerox Corporation.

© 2016 Xerox Corporation. All rights reserved. Unpublished rights reserved under the copyright laws of the United States. Contents of this publication may not be reproduced in any form without permission of Xerox Corporation. Copyright protection claimed includes all forms of matters of copyrightable materials and information now allowed by statutory or judicial law or hereinafter granted, including without limitation, material generated from the software programs which are displayed on the screen such as styles, templates, icons, screen displays, looks, and so on.

XEROX® and XEROX and design®, PhaserSMART®, DocuCard®, DocuSP®, FreeFlow® CentreWare®, infoSMART®, Made For Each Other®, PagePack™, ProfitAccelertor™, WorkCentre™, and Walk-Up™ are trademarks of Xerox Corporation in the United States and/or other countries.

Other company trademarks are also acknowledged.

As an ENERGY STAR® partner, Xerox Corporation has determined that this product meets the ENERGY STAR guidelines for energy efficiency. The ENERGY STAR name and logo are registered U.S. marks.

Introduction

About This Manual iii
How To Use This Manual iii
Service Safety Summary iv
Symbols Used on the Product vi
Voltage Measurement and Specifications vii
Health and Safety Incident Reporting viii
Regulatory Specifications ix
Translation of Warnings x
Overviews xii
Options xviii
Configurations xviii
Consumables and Maintenance xix

About This Manual

The Phaser 6510 Printer (SFP) and WorkCentre 6515 Multifunction Printer (MFP) Service Manual is part of a multinational service documentation system delivered in the standard Xerox EDOC service manual format. This manual is the primary document used for diagnosing, repairing, maintaining, and troubleshooting these systems. The Service Manual is the controlling publication for a service call. To ensure product understanding, complete the Xerox Service Training Program for this printer.

Organization

Section titles and the information contained in each is presented in the following paragraphs:

Section 1 Service Call Procedures

This section is used to start and complete a service call. The procedures in this section will either direct you to a Repair Analysis Procedure (RAP), or identify a faulty component or subassembly.

Section 2 Status Indicator Repair Analysis Procedures

This section contains the Repair Analysis Procedures (RAPs) and checkouts necessary to diagnose, isolate and repair faults other than image quality faults.

Section 3 Image Quality

This section contains the Image Quality Repair Analysis Procedures (IQ RAPs), checkouts and setup procedures necessary to diagnose, isolate and repair image quality faults.

Section 4 Repairs/Adjustments

This section contains the instructions for removal, replacement, and adjustment of parts.

Section 5 Parts List

This section contains the illustrated spare parts list. Any part that is spared or that must be removed to access a spared part is illustrated.

Section 6 General Procedures / Information

This section contains all other procedures, product specifications and general information.

Section 7 Wiring Data

This section contains the wiring diagrams.

Section 8 Principles of Operation

This section contains details of printer operation and component locations.

Component Names

Names of parts that appear in the disassembly procedures may not be exactly the same as the names that appear on the part or listed in the Parts List. For example; a part called the Registration Chute Assembly may appear on the Parts List as Assembly, Chute REGI.

How To Use This Manual

Always start with the Service Call Procedures, Section 1. Perform Initial Actions and verify the problem, then follow the directions given.

How to Differentiate Between Machine Variants

The machines will be identified in this manual by the model identifier 6510N/DN/DNI or 6515N/DN/DNI.

When a procedure, parts list description or other reference is unique amongst different models of machine, the appropriate model designator is indicated. Any artwork is also specific. The Phaser 6510 and WorkCentre 6515 models may also be referred to as SFP and MFP respectively.

NOTE: *This manual services all configurations of the machine. Ignore references to options not installed on the machine.*

Warnings, Cautions and Notes

WARNING

A warning is used whenever an operating or maintenance procedure, practice, condition or statement, if not strictly observed, could result in personal injury.

A translated version of all warnings is in Translation of Warnings.

CAUTION

A caution is used whenever an operation or maintenance procedure, practice, condition or statement, if not strictly observed, could result in damage to the equipment.

NOTE: *A note appears to highlight a procedure, practice, condition or statement.*

Service Acronyms

While using this service documentation, you may encounter acronyms that are unfamiliar.

To find definitions for Xerox acronyms, go to the following page in your web browser, then enter the acronym and click Search:

https://open.xerox.com/Services/acronym

Service Safety Summary

General Guidelines

For qualified service personnel only: Refer also to the section Electrical Safety.

Avoid servicing alone: Do not perform internal service or adjustment of this product unless another person capable of rendering first aid or resuscitation is present.

WARNING

While the printer is on, never touch live parts if not required. Power is supied to the AC inlet, LVPS Board (PL 18.1 Item 16/PL 18.5 Item 16), and ESS MFP/ESS SFP Boards (PL 18.1 Item 5/PL 18.5 Item 5) even while the printer is off. Never touch these live components.

Use care when servicing with power applied: Dangerous voltages may exist at several points in this product. To avoid personal injury, do not touch exposed connections and components while power is on. Disconnect power before removing the power supply shield or replacing components.

Do not wear jewelry: Remove jewelry prior to servicing. Rings, necklaces and other metallic objects could come into contact with dangerous voltages and currents.

Electrical Safety

- Use the Power Cord supplied with the printer.
- Plug the Power Cord directly into a properly grounded electrical outlet.
- Do not use a ground adapter plug to connect the printer to an electrical outlet that does not have a ground connection terminal.
- Do not use an extension cord or power strip.
- Do not place the system in an area where people might step on the power cord.
- Do not place objects on the power cord.
- Do not block ventilation openings. These openings prevent printer overheating.
- Do not drop paper clips or staples into the printer.

Operational Safety

The printer and supplies were designed and tested to meet strict safety requirements. These include safety agency examination, approval, and compliance with established environmental standards.

Pay attention to these safety guidelines to ensure the continued, safe operation of the printer.

- Use the supplies specifically designed for your system. The use of unsuitable materials may cause poor performance and a possible safety hazard.
- Follow all warnings and instructions marked on, or supplied with, the system, options and supplies.

NOTE: *The Total Satisfaction Guarantee is available in the United States and Canada. Coverage may vary outside these areas; please contact your local representative for details.*

Maintenance Safety

- Do not attempt maintenance not specifically described in the printer documentation.
- Do not use aerosol cleaners. The use of supplies that are not approved may cause poor performance and could create a hazardous condition.
- Do not burn any consumables or routine maintenance items. For information on Xerox supplies recycling programs, go to www.xerox.com/gwa.

Safety Labels

Read and obey all posted caution, warning, and danger labels. Throughout the printer, these safety labels are displayed on potentially dangerous components. As you service the printer, check to make certain that all safety labels remain in place.

- Caution: An unapparent hazard exists that may cause personal injury or damage to the equipment. For example, a panel may cover the hazardous area.
- Warning: An unapparent hazard exists that may cause serious personal injury.
- Danger: An unapparent hazard exists that may cause serious personal injury or death.

Safety Interlocks

Use caution so that the safety devices for preventing accidents (interlocks switches, fuses, thermostats, etc.) and the protective parts for users (covers, control panel, etc.) can function as intended. Make sure all covers are in place and all interlock switches are functioning correctly after you have completed a service call. If you bypass an interlock switch, use extreme caution when working on or around the printer. Figure 1 and Figure 2 show the interlock switch locations and circuitry.

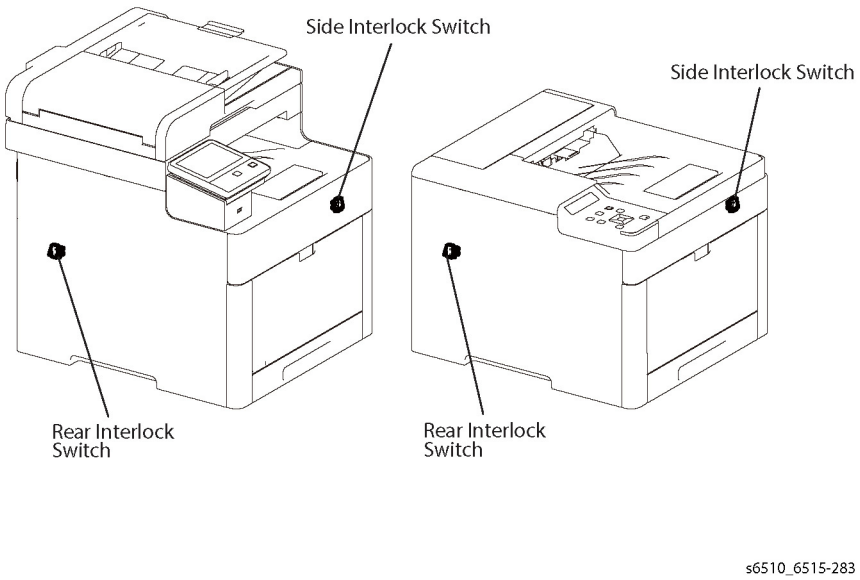

Figure 1 Safety Interlock Switch Locations

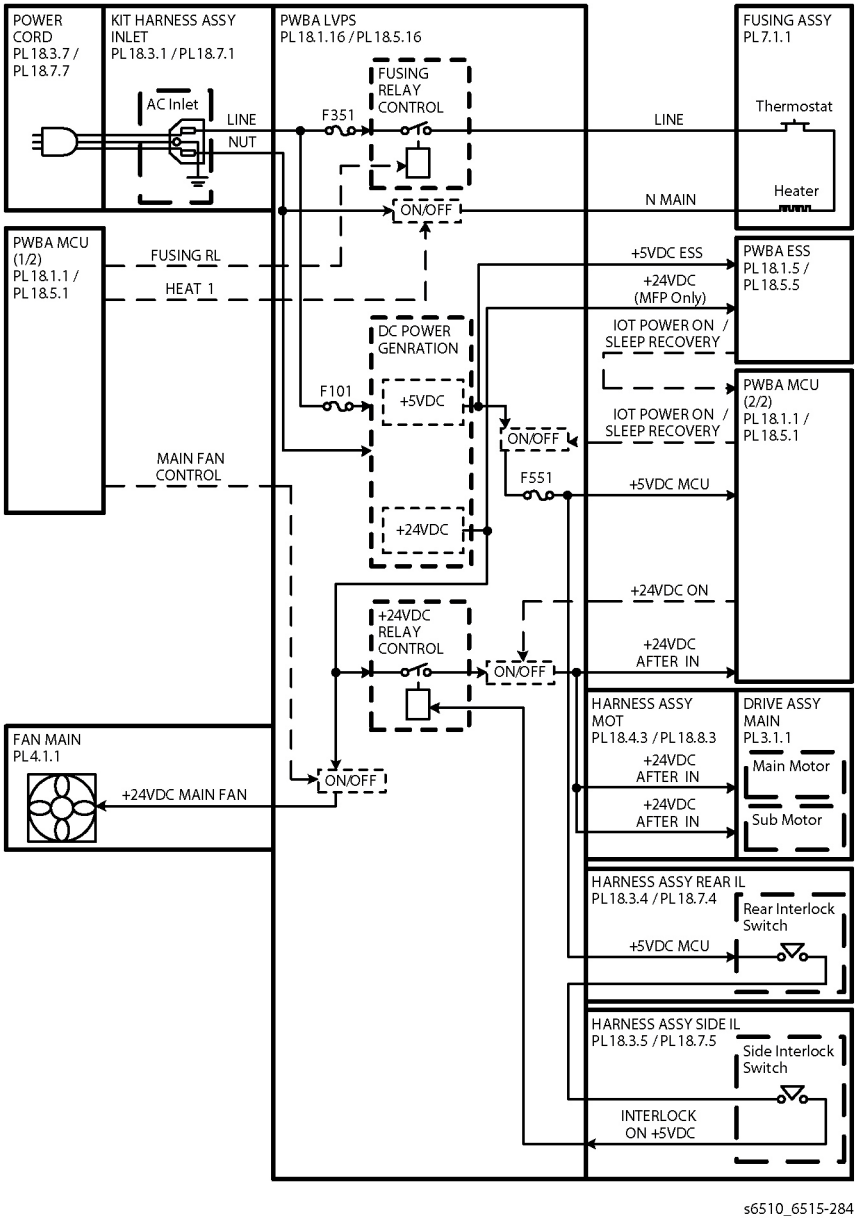

Figure 2 Safety System Schematic

Drive Units

When servicing gears or other driving units, be sure to turn off the power switch and unplug the power cord. Drive them manually when required.

High-Temperature Units

When servicing high-temperature units (securing unit, etc.), be sure to turn them off to prevent burns, injuries and other troubles. Remove the power plug and and wait 40 minutes before starting service processes so they have cooled down sufficiently.

Routing Wire Harnesses

Before starting the service operation, carefully check how the harness wires are routed. When routing them, check that they are routed in the same way as they were before the servicing, and that they are not pinched or do not interfere with the corners or edges of any operating components.

Battery

A lithium battery is used on the ESS Board.

WARNING

To avoid the possibility of fire or explosion, always replace the battery with the same type, and dispose of old batteries as required by local regulations.

Symbols Used on the Product

The following precautionary symbols may appear on the machine.

Figure 1 indicates Danger High Voltage.

Figure 1 High Volta ge symbol

Figure 2 is the Protective Ground (Earth) symbol.

Figure 2 Protective Ground (Earth) symbol

Figure 3 is the symbol indicating a hot surface. Use caution to avoid personal injury.

Figure 3 Hot Surface symbol

Figure 4 is the symbol indicating that the surface is hot while the printer is running. After turning off the power, wait 30 minutes.

Figure 4 Wait 30 Minutes symbol

Figure 5 is the symbol indicating where to avoid pinching fingers in the printer. Use caution to avoid personal injury.

Figure 5 Pinch Injury symbol

Figure 6 is the symbol to use caution (or draws attention to a particular component). Refer to the manual(s) for information.

Figure 6 Use Caution symbol

Figure 7 is the symbol indicating that the item is sensitive and should not be touched.

Figure 7 Do Not Touch symbol

Figure 8 is the symbol indicating the item is sensitive to sunlight, and exposure to it will reduce its life span.

Figure 8 No Sunlight symbol

Figure 9 is the symbol indicating the item is sensitive to any light, and exposure to it will reduce its life span.

Figure 9 No Light symbol

Voltage Measurement and Specifications

Table 1 shows the voltages present in the WorkCentre 6515. Measurements of DC voltage must be made with reference to the specified DC Common, unless some other point is referenced in a diagnostic procedure. All measurements of AC voltage should be made with respect to the adjacent return or ACN wire.

Table 1 Voltage Measurement and Specifications

Voltage	Specification
Input Power 220 V	198 VAC TO 254 VAC
Input Power 100 V	90 VAC TO 135 VAC
Input Power 120 V	90 VAC TO 135 VAC
+5 VDC	+4.75 VDC TO +5.25 VDC
+24 VDC	+23.37 VDC TO +27.06 VDC

Logic Voltage Levels

Table 2 show the logic levels present in the WorkCentre 6515. Measurements of logic levels must be made with reference to the specified DC Common, unless some other point is referenced in a diagnostic procedure.

Table 2 Logic Levels

Voltage	H/L Specification
+5 VDC	H = +3.00 V or greater L = below 0.8 V
+3.3V	H = +2 V or greater L =below 0.8 V

DC Voltage Measurement in RAPs

The RAPs have been designed so that when it is required to use the DMM to measure a DC voltage, the first test point listed is the location for the red (+) meter lead and the second test point is the location for the black meter lead. For example, the following statement may be found in a RAP.

There is +5 VDC from P/J7 to P/J68.

In this example, the red meter lead would be placed on P/J7 and the black lead on P/J68.

If a second test point is not given, it is assumed that the black meter lead may be attached to chassis ground.

Health and Safety Incident Reporting

I. Summary

This section defines requirements for notification of health and safety incidents involving Xerox products (equipment and materials) at customer locations.

II. Scope

Xerox Corporation and subsidiaries worldwide.

III. Objective

To enable prompt resolution of health and safety incidents involving Xerox products and to ensure Xerox regulatory compliance.

IV. Definitions

Incident:

An event or condition occurring in a customer account that has resulted in injury, illness or property damage. Examples of incidents include machine fires, smoke generation, physical injury to an operator or service representative. Alleged events and product conditions are included in this definition.

V. Requirements

Initial Report:

1. Xerox organizations shall establish a process for individuals to report product incidents to Xerox Environment Health & Safety within 24 hours of becoming aware of the event.
2. The information to be provided at the time of reporting is contained in Appendix A (Health and Safety Incident Report involving a Xerox product).
3. The initial notification may be made by any of the following methods:
   - For incidents in North America and Developing Markets West (Brazil, Mexico, Latin American North and Latin American South):
     - Phone* Xerox EH&S at: 1-800-828-6571.
     - Electronic mail to Xerox EH&S
     - FAX Xerox EH&S at: 1-585-422-6449 [intelnet 8*222 6449].
   - For incidents in Europe and Developing Markets East (Middle East, Africa, India, China and Hong Kong):
     - Phone* Xerox EH&S at: +44 (0) 1707 353434.
     - Electronic mail Xerox EH&S at: Elaine.Grange@xerox.com.
     - FAX Xerox EH&S at: +44 (0) 1707 353914 [intelnet 8*668 3914].

   *Initial notification made by phone must be followed within 24 hours by a completed incident report and sent to the indicated electronic mail address or FAX number.

   NOTE: *If sending a FAX, please also send the original via internal mail.*

Responsibilities for resolution:

1. Business Groups/Product Design Teams responsible for the product involved in the incident shall:
   a. Manage field bulletins, customer correspondence, product recalls, safety retrofits.
   b. Fund all field retrofits.
2. Field Service Operations shall:
   a. Preserve the Xerox product involved and the scene of the incident inclusive of any associated equipment located in the vicinity of the incident.
   b. Return any affected equipment/part(s) to the location designated by Xerox EH&S and/or the Business Division.
   c. Implement all safety retrofits.
3. Xerox EH&S shall:
   a. Manage and report all incident investigation activities.
   b. Review and approve proposed product corrective actions and retrofits, if necessary.
   c. Manage all communications and correspondence with government agencies.
   d. Define actions to correct confirmed incidents.

Regulatory Specifications

Xerox has tested this product to electromagnetic emission and immunity standards. These standards are designed to mitigate interference caused or received by this product in a typical office environment.

United States (FCC Regulations)

The WorkCentre 6515 has been tested and found to comply with the limits for a Class A digital device pursuant to Part 15 of the FCC Rules. These limits are designed to provide reasonable protection against harmful interference in a commercial installation. This equipment generates, uses, and can radiate radio frequency energy. If it is not installed and used in accordance with these instructions, it may cause harmful interference to radio communications. Operation of Class A equipment in a residential area is likely to cause harmful interference in which case the user will be required to correct the interference at his/her own expense. There is no guarantee that interference will not occur in a particular installation.

If this equipment does cause harmful interference to radio or television reception, which can be determined by turning the equipment Off and On, the user is encouraged to try to correct the interference by one or more of the following measures:

- Reorient or relocate the receiver.
- Increase the separation between the equipment and receiver.
- Connect the equipment to a different electrical circuit.
- Consult the dealer or an experienced radio/television technician for help.

Any modifications not expressly approved by Xerox could void the user's authority to operate the equipment. To ensure compliance with Part 15 of the FCC rules, use shielded interface cables.

Canada (Regulations)

This Class A digital apparatus complies with Canadian ICES-003.

Cet appareil numérique de la classe A est conforme à la norme NMB-003 du Canada.

European Union

CE Mark

Figure 1 CE Symbol

The CE mark (Figure 1) applied to this product symbolizes Xerox's declaration of conformity with the following applicable Directives of the European Union as of the dates indicated:

February 26, 2014 , Low Voltage Directive 2014/35/EU

April 20, 2014, Electromagnetic Compatibility Directive 2014/30/EU

This product, if used properly in accordance with the user's instructions, is neither dangerous for the consumer nor for the environment.

To ensure compliance with European Union regulations, use shielded interface cables.

A signed copy of the Declaration of Conformity for this product can be obtained from Xerox.

Translation of Warnings

WARNING

Switch off the electricity to the machine. Disconnect the power cord from the customer supply while performing tasks that do not need electricity. Electricity can cause death or injury. Moving parts can cause injury.

DANGER: Mettez la machine hors tension. Déconnectez le cordon d'alimentation de l'alimentation du client lorsque vous réalisez des tâches qui ne nécessitent pas d'électricité. L'électricité peut être à l'origine de blessures, voire d'un accident mortel. Les pièces amovibles peuvent être à l'origine de blessures.

AVVERTENZA: Spegnere la macchina. Scollegare il cavo di alimentazione dall'alimentatore quando si eseguono attività che non richiedono elettricità. L'elettricità può causare morte o lesioni personali. Le parti in movimento possono causare lesioni personali.

VORSICHT: Schalten Sie die Stromversorgung der Maschine ab. Ziehen Sie das Stromkabel ab, wenn Sie Aufgaben ausführen, für die keine Stromversorgung benötigt wird. Stromschläge können Todesfällen oder Verletzungen verursachen. Bewegliche Teile können zu Verletzungen führen.

AVISO: Apague la electricidad de la máquina. Desconecte el cable de alimentación eléctrica de la toma de pared mientras esté realizando tareas que no necesiten corriente. La electricidad puede causar daños o la muerte. Las partes móviles pueden causar daños.

WARNING

Perform the steps in the following procedure carefully. Failure to follow this procedure carefully could result in electrical shock and personal injury.

DANGER: Faire très attention en effectuant les étapes de la procédure suivante. Si cette procédure n'est pas strictement respectée, il y a des risques d'électrocution et d'autres blessures.

AVVERTENZA: Si prega eseguire attentamente la seguente procedura. Omettere di eseguire attentamente la procedura indicata può provocare forti scosse e gravi ferite.

VORSICHT: Befolgen Sie die Schritte der folgenden Anleitung genau. Die Nichtbefolgung dieser Anweisungen kann elektrischen Schlag oder andere Körperverletzungen zur Folge haben.

AVISO: Lleve a cabo los pasos del procedimiento siguiente con mucho cuidado. No seguir este procedimiento cuidadosamente puede ocasionar una descarga eléctrica y lesiones personales

WARNING

Use extreme care when working in the following area. Some of the components are electrically energized and could cause electrical shock and personal injury if touched.

DANGER: Faire très attention en travaillant dans la zone suivante. Certains éléments portent une charge électrique et présentent un risque d'électrocution et de graves blessures s'ils sont touchés.

AVVERTENZA: Maneggiare la seguente area con la massima precauzione. Alcuni componenti sono carici di corrente elettrica e se toccati possono provocare scosse elettriche e lesioni.

VORSICHT: Bei Arbeiten in folgenden Bereichen besondere Vorsicht walten lassen. Einige der Komponenten sind elektrisch aufgeladen und können bei Berührung einen Stromschlag und körperliche Verletzung verursachen

AVISO: Tenga mucho cuidado al trabajar en el área siguiente. Algunos de los componentes están cargados eléctricamente y podrían producir descargas y lesiones, si se tocan

WARNING

Do not work in a confined space. 1 m (39 inches) space is needed for safe working.

DANGER : Ne pas travailler dans un espace restreint. 1 mètre d'espace est nécessaire pour un dépannage en toute sécurité.

AVVERTENZA: Non lavorare in uno spazio limitato; è necessario uno spazio di almeno un metro attorno alla macchina per la sicurezza dell'operatore.

VORSICHT: Nur mit ausreichendem Bewegungsspielraum (1 m) arbeiten.

AVISO: No trabaje en un espacio reducido. Se necesita 1 metro de espacio para trabajar con seguridad.

WARNING

Use safe handling procedures when removing the module. Refer to GP 16. The module is heavy.

DANGER: Conformez-vous aux procédures de manipulation de sécurité pour le retrait du module. Reportez-vous à GP 16. Le module est lourd.

AVVERTENZA: Utilizzare procedure di gestione sicure durante la rimozione del modulo. Vedere GP 16. Il modulo è pesante.

VORSICHT: Verwenden Sie sichere Vorgehensweisen zum Entfernen des Moduls. Siehe auch GP 16. Das Modul ist sehr schwer.

AVISO: Utilice los procedimientos de seguridad cuando elimine el módulo. Consulte el GP 16. El módulo es pesado.

WARNING

Follow the service procedure exactly as written. Use of controls or adjustments other than those specified in this manual, may result in an exposure to invisible laser radiation. During servicing, the invisible laser radiation can cause eye damage if looked at directly.

DANGER : Les procédures de dépannage doivent être suivies à la lettre. Si les réglages ou vérifications ne sont pas effectués suivant les instructions de ce manuel, il peut y avoir un risque d'exposition dangereuse au faisceau laser. Celui-ci peut provoquer des lésions oculaires s'il est observé directement.

AVVERTENZA: Eseguire le procedure di servizio esattamente come descritto. L'utilizzo di dispositivi di controllo o di registrazione diversi da quelli riportati in questo manuale potrebbe comportare un'esposizione a radiazioni laser invisibili. Tali radiazioni possono danneggiare gli occhi se si guarda direttamente il fascio laser durante gli interventi di servizio.

VORSICHT: Die Wartungsarbeiten genau den Anweisungen entsprechend durchführen. Der Umgang mit Steuer- oder Bedienelementen, deren Verwendung nicht ausdrücklich in diesem Handbuch angewiesen wurde, kann dazu führen, dass unsichtbare Laserstrahlung frei gesetzt wird. Direkter Blickkontakt mit dem Laserstrahl kann bleibende Augenschäden verursachen.

AVISO: Siga los procedimientos de mantenimiento tal como están descritos. El uso de controles o ajustes no especificados en este manual puede tener como resultado la exposición a radiación láser invisible. Durante las operaciones de mantenimiento, la radiación de láser invisible puede causar daños en los ojos si se mira directamente a ella.

WARNING

USA and Canada. Do not install this machine in a hallway or exit route that does not have 1.12 m (44 inches) of space additional to the normal space requirements in front of the machine. To conform with fire regulations this additional 1.12 m (44 inches) of space is needed in front of the machine in hallway and exit routes.

DANGER: États-Unis et Canada. Si cette machine est installée dans un couloir ou une voie de sortie, 1,12 m (44 pouces) d'espace supplémentaire à l'espace normal doit être disponible devant la machine conformément aux normes de sécurité d'incendie.

AVVERTENZA: N/A

VORSICHT: N/A

AVISO: Estados Unidos y Canadá. No instale esta máquina en un corredor o ruta de salida que no tenga 1.12 m (44 pulgadas) de ancho delante de la máquina, sin incluir el espacio que ocupe la máquina. Este espacio adicional de 1.12 m (44 pulgadas) delante de la máquina en corredores y rutas de salida es necesario para cumplir los requisitos de las normas sobre incendios.

WARNING

Use only Xerox materials and components. This product is safety certified using Xerox materials and components. The use of non Xerox materials and components may invalidate the safety certificate.

DANGER : N'utilisez que des matières premières et des composants Xerox. La sécurité du produit est assurée dans le cadre de son utilisation avec des matières premières et des composants Xerox. L'utilisation de matières premières et de composants autres que ceux de Xerox risque d'invalider le certificat de sécurité.

AVVERTENZA: Utilizzare solo materiali e componenti Xerox per avvalersi della certificazione di protezione. L'utilizzo di materiali e componenti non Xerox può rendere nulla la certificazione di protezione.

VORSICHT: Verwenden Sie nur Materialien und Komponenten von Xerox. Dieses Produkt besitzt die Sicherheitszertifizierung bei Verwendung von Xerox-Materialien und -Komponenten. Die Verwendung von Materialien und Komponenten anderer Hersteller setzt möglicherweise das Sicherheitszertifikat außer Kraft.

AVISO: Utilice solo los materiales y componentes Xerox. Este producto dispone de un certificado de seguridad si se utilizan los materiales y componentes Xerox. Este certificado de seguridad no será válido si se utilizan materiales y componentes que no sean de Xerox.

WARNING

Do not touch the Fuser while it is hot.

DANGER : Ne pas toucher au four pendant qu'il est encore chaud.

AVVERTENZA: Non toccare il fonditore quando è caldo.

VORSICHT: Fixierbereich erst berühren, wenn dieser abgekühlt ist.

AVISO: No toque el fusor mientras está caliente.

WARNING

Do not handle the Fuser components until they have cooled. Some Fuser components operate at hot temperatures and can produce serious personal injury if touched.

DANGER: Ne pas manipuler les éléments du four avant de les laisser refroidir. Certains éléments du four fonctionnent à des températures très élevées et peuvent causer de graves blessures s'ils sont touchés.

AVVERTENZA: Non maneggiare i componenti del fusore finché non sono raffreddati. Alcuni di questi componenti funzionano ad alte temperature e possono provocare gravi ferite se vengono toccati.

VORSICHT: Die Fixieranlage sollte erst gehandhabt werden, wenn diese genügend abgekühlt ist. Einige Teile der Fixieranlage erzeugen übermäßige Hitze und führen bei der Berührung zu schweren Verbrennungen.

AVISO: No manipule los componentes del fusor antes de que se enfríen. Algunos de los componentes del fusor funcionan a altas temperaturas y pueden ocasionar daños personales graves si se los toca.

WARNING

Do not attempt to remove or lift the following component with less than 2 people. The component is very heavy and requires at least 2 people to lift or remove it. Any attempt to remove or lift the component with less than 2 people could result in serious personal injury.

DANGER: Ne pas tenter d'enlever ou soulever l'élément suivant tout seul. Cet élément est très lourd; au moins 2 personnes doivent être présentes pour le soulèvement ou la dépose. Toute tentative d'enlever ou soulever cet élément sans la collaboration d'au moins 2 personnes peut causer de graves blessures.

AVVERTENZA: Non tentare di togliere o sollevare il componente seguente con meno di 2 persone. Il componente è molto pesante e richiede almeno 2 persone per sollevarlo o rimuoverlo. Tentare di rimuovere o sollevare questo componente con meno di 2 persone può provocare gravi ferite.

VORSICHT: Versuchen Sie keinesfalls, die folgende Komponente mit weniger als 2 Personen zu entfernen oder zu heben. Die Komponente ist sehr schwer, daher werden mindestens 2 Personen benötigt, um sie zu heben oder zu entfernen. Der Versuch, die Komponente mit weniger als 2 Personen zu entfernen oder zu heben, kann schwere Körperverletzung zur Folge haben.

AVISO: No intente levantar o retirar el componente siguiente usando menos de 2 personas. El componente es muy pesado, y se necesitan por lo menos 2 personas para levantarlo o retirarlo. Intentar retirar o levantar el componente usando menos de 2 personas puede resultar en lesionales personales serias.

Overviews

Technical Support Information

The Xerox Service Manual is the primary document used for repairing, maintaining, and troubleshooting the Phaser 6510 and WorkCentre 6515. To ensure complete understanding of these products, participation in Xerox Service Training is strongly recommended. To service these products, certification for these products is required.

For updates to the Service Manual, Service Bulletins, knowledge base, etc., go to:

- Xerox Global Service Net - https://www.xrxgsn.com/secure/main.

For further technical support, contact your assigned Xerox Technical Support representative.

Phaser 6510 Overview

The Phaser 6510 is a color LED printer. The Output Tray holds 250 20 lb sheets facedown. Phaser 6510 options add media capacity and wireless connectivity. A configuration with one additional 550-Sheet Feeder is supported. The following sections identify parts from the front, side, rear, and internal views.

Phaser 6510 Standard Orientation

Figure 1 shows the standard orientation for the Phaser 6510. Directional descriptions used in the procedures are defined as follows:

- Front: Direction toward you when facing the front of the printer.
- Rear: Direction opposite to the front when facing the front of the printer.
- Left: Left-hand direction when facing the front of the printer.
- Right: Right-hand direction when facing the front of the printer.

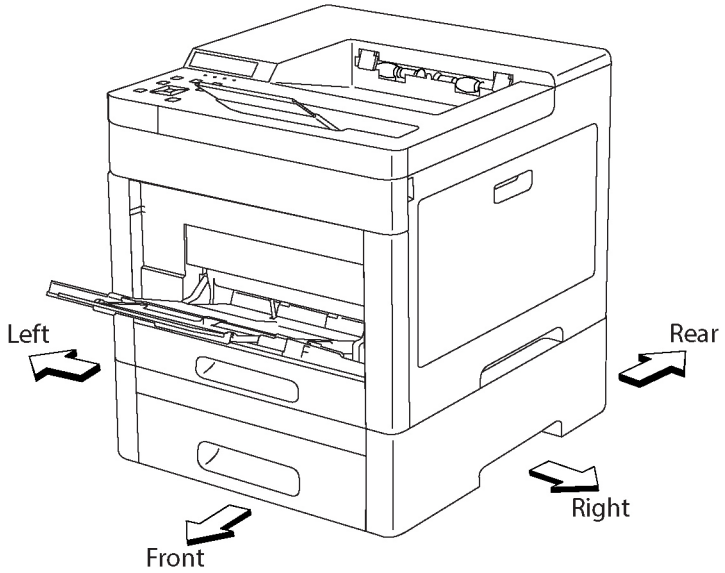

Figure 1 Phaser 6510 Standard Orientation

Parts of the Phaser 6510

Phaser 6510 Front and Right Side Views

Figure 2 shows the printer's front and right side views with parts identified in Table 1.

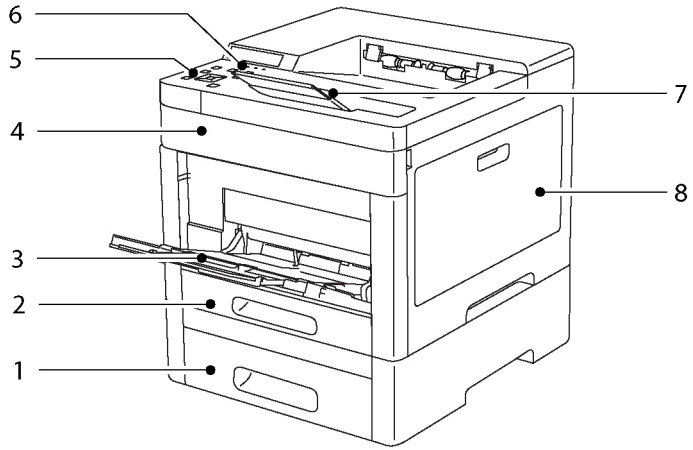

Figure 2 Phaser 6510 Front and Right Side Views

Table 1 Front and Right Side Parts Identification

1.	Tray 2, Optional 550-Sheet Feeder	5.	Control Panel
2.	Tray 1	6.	Power/Wake Button
3.	Bypass Tray	7.	Output Tray Extension
4.	Toner Cover	8.	Waste Cartridge Cover

Phaser 6510 Rear and Left Side Views

Figure 3 shows the printer's rear and left side views with parts identified in Table 2.

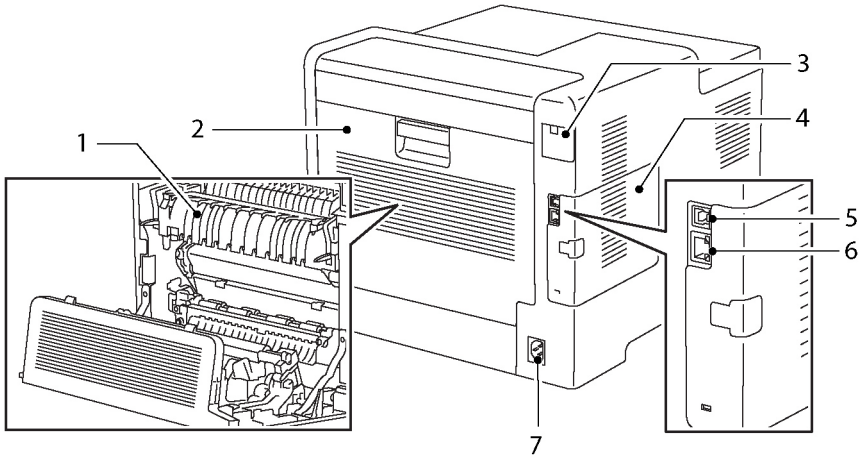

Figure 3 Phaser 6510 Rear and Left Side Views

Table 2 Rear and Left Side Parts Identification

1.	Fuser	5.	USB Port
2.	Rear Cover	6.	Ethernet Connection
3.	WIFI Cap	7.	AC Power Receptacle
4.	ESS Cover		

Phaser 6510 Internal Parts

Figure 4 shows the printer's front and right side internal views with parts identified in Table 3.

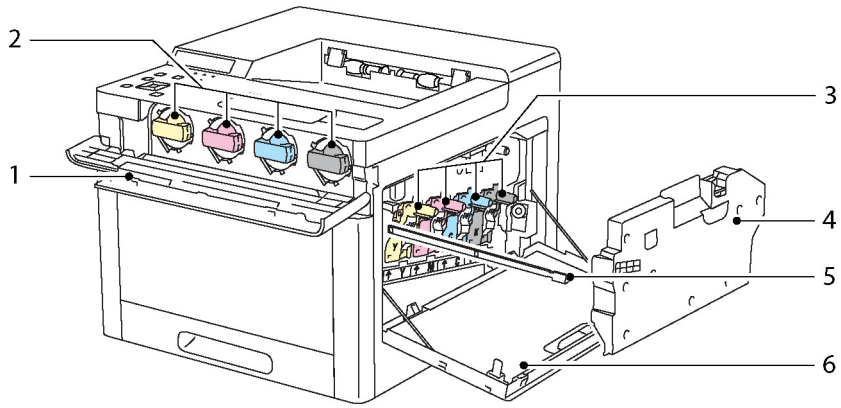

Figure 4 Phaser 6510 Internal Parts

Table 3 Internal Parts Identification

1.	Toner Cover	4.	Waste Cartridge
2.	Toner Cartridges (Y, M, C, K)	5.	LPH Cleaning Rod
3.	Drum Cartridges (Y, M, C, K)	6.	Waste Cartridge Cover

Control Panel Layout

The Phaser 6510 Control Panel (Figure 5) consists of a touchscreen, a keypad, and several buttons. These buttons are used to navigate the menu system, perform functions, and select operational modes. Table 4 lists the function of each control.

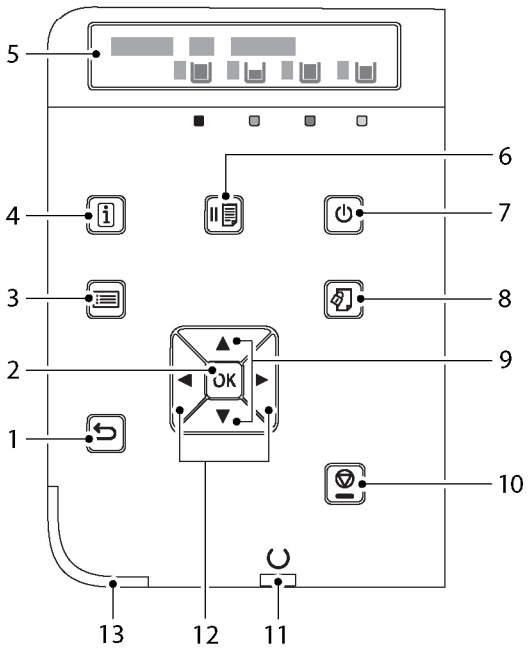

Figure 5 Phaser 6510 Control Panel

Table 4 Control Panel Parts Identification

1.	Back/Return button	8.	Print Menu
2.	OK/Accept	9.	Scroll Up and Down
3.	Menu	10.	Cancel Print Job
4.	Information	11.	Printer Ready or Processing Light
5.	Control Panel Display	12.	Scroll Left and Right
6.	User Mode: Pause Printing Diagnostics Mode: Online	13.	Status LED
7.	Power/Wake		

WorkCentre 6515 Overview

The WorkCentre 6515 is a color LED print engine with a Duplex Automatic Document Feeder (DADF). The Output Tray holds 250 20 lb. sheets facedown. WorkCentre 6515 options add media capacity and wireless connectivity. A configuration with one additional 550-Sheet Feeder is supported. The following subsections identify parts from the front, side, rear, and internal views.

WorkCentre 6515 Standard Orientation

Figure 6 shows the standard orientation for the WorkCentre 6515. Directional descriptions used in the procedures are defined as follows:

- Front: Direction toward you when facing the front of the printer.
- Rear: Direction opposite to the front when facing the front of the printer.
- Left: Left-hand direction when facing the front of the printer.
- Right: Right-hand direction when facing the front of the printer.

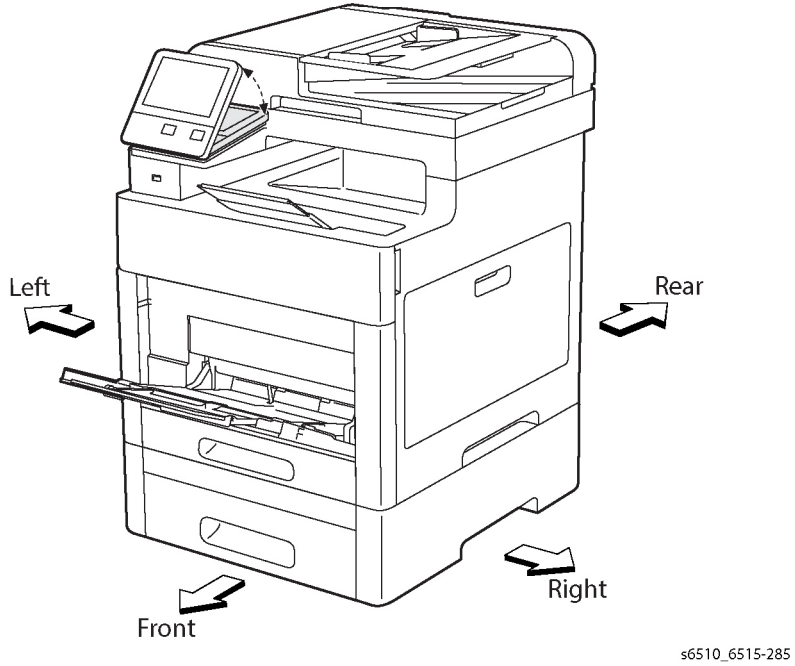

Figure 6 WorkCentre 6515 Standard Orientation

Parts of the WorkCentre 6515

WorkCentre 6515 Front and Right Side Views

Figure 7 shows the printer's front and right side views with parts identified in Table 5.

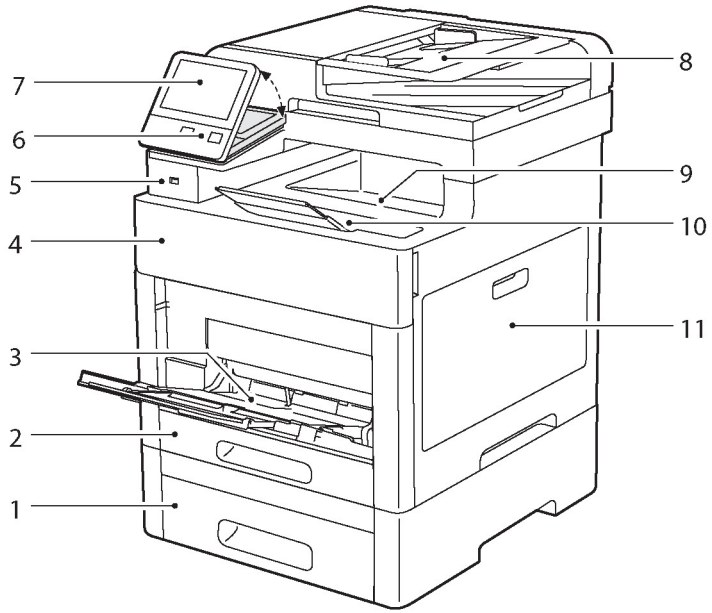

Figure 7 WorkCentre 6515 Front and Right Side Views

Table 5 Front and Right Side Parts Identification

1.	Tray 2, Optional 550-Sheet Feeder	7.	Touch Screen Display
2.	Tray 1	8.	Single-Pass Duplex Automatic Document Feeder (DADF)
3.	Bypass Tray	9.	Output Tray
4.	Toner Cover	10.	Output Tray Extension
5.	USB Memory Port	11.	Waste Cartridge Cover
6.	Power/Wake Button		

WorkCentre 6515 Rear and Left Side Views

Figure 8 shows the printer's rear and left side views with parts identified in Table 6.

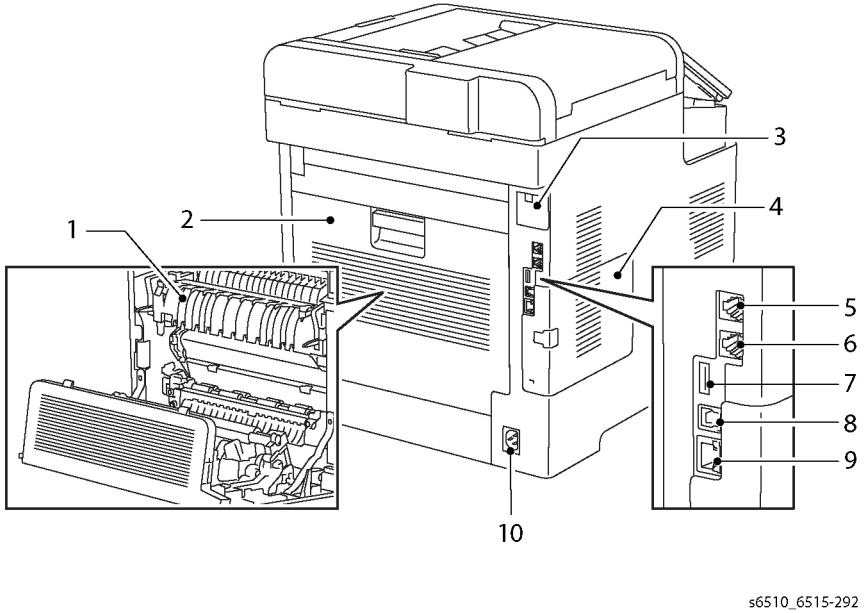

Figure 8 WorkCentre 6515 Rear and Left Side Views

Table 6 Rear and Left Side Parts Identification

1.	Fuser	6.	FAX Line Connector
2.	Rear Cover	7.	USB Port, Type A
3.	WIFI Cap	8.	USB Port, Type B
4.	ESS Cover	9.	Ethernet Connection
5.	Phone Connector	10.	AC Power Receptacle

WorkCentre 6515 Internal Parts

Figure 9 shows the printer's front and right side views with internal parts identified in Table 7.

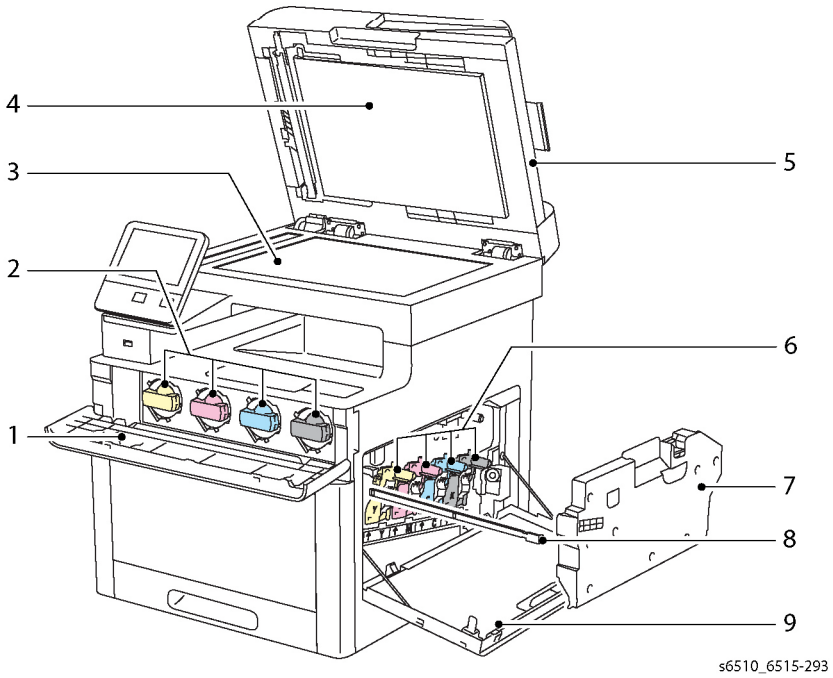

Figure 9 WorkCentre 6515 Internal Parts

Table 7 Internal Parts Identification

1.	Toner Cover	6.	Drum Cartridges (Y, M, C, K)
2.	Toner Cartridges (Y, M, C, K)	7.	Waste Cartridge
3.	Platen	8.	LPH Cleaing Rod
4.	Document Cover	9.	Waste Cartridge Cover
5.	Single-Pass Duplex Automatic Document Feeder (DADF)		

Control Panel Layout

The WorkCentre 6515 Control Panel (Figure 10) consists of a touchscreen, a keypad, and several buttons. These buttons are used to navigate the menu system, perform functions, and select operational modes. Table 8 lists the function of each control.

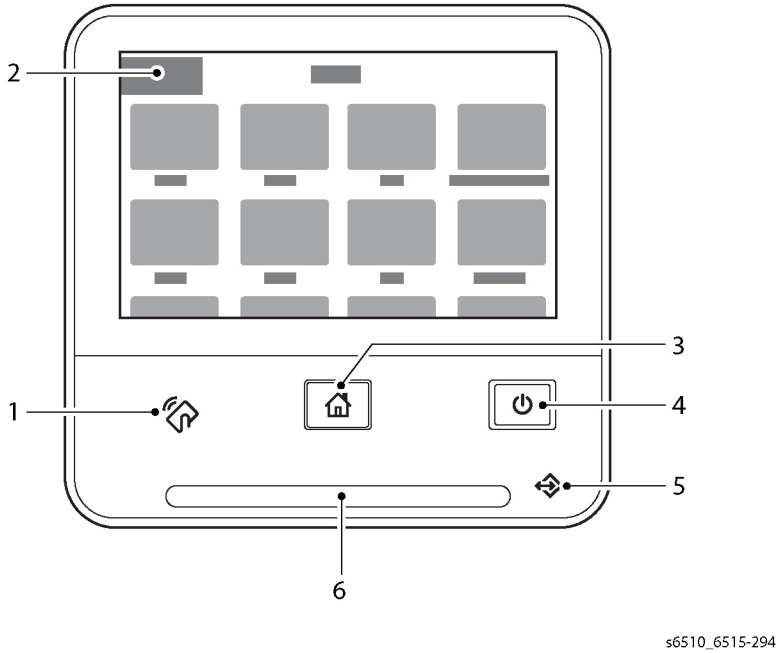

Figure 10 WorkCentre 6515 Control Panel

Table 8 Control Panel Parts Identification

1.	Near Field Communication (NFC) Area	4.	Power/Wake
2.	Touch Screen Display	5.	Status LED
3.	Home Button		

Options

Users can install the following options on the SFP and MFP:

- 550-sheet feeder
- Wi-Fi Module

550-Sheet Feeder

The optional 550-sheet feeder increases media storage. One additional tray is supported.

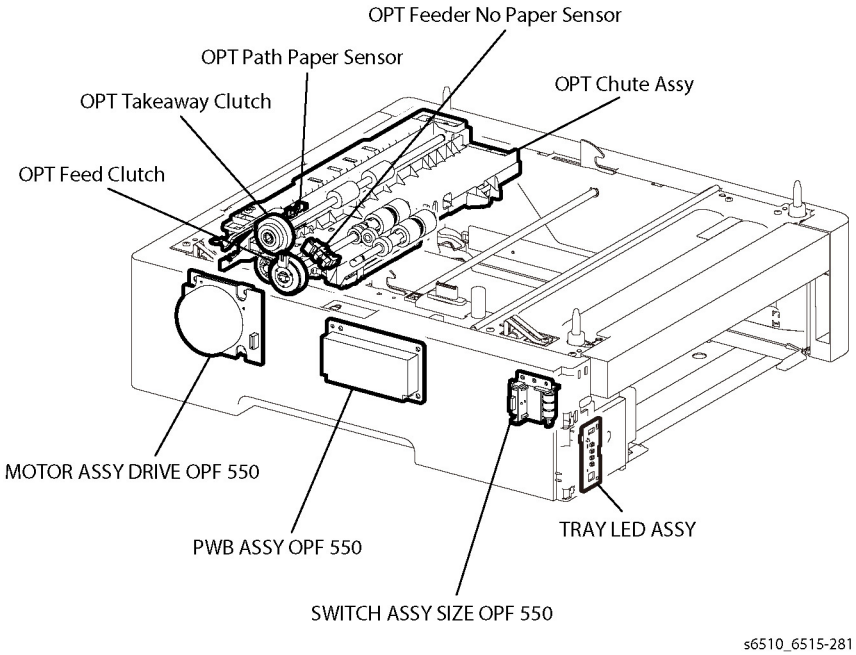

Figure 1 Option 550-Sheet Feeder

Configurations

The configurations for this printer are described in this section.

Basic Configuration

The printer has the following basic configurations (Figure 1) depending on the destination.

- Print engine main unit (MSI and 250 feeder unit as the standard paper feeding)
- Consumables (CRU)

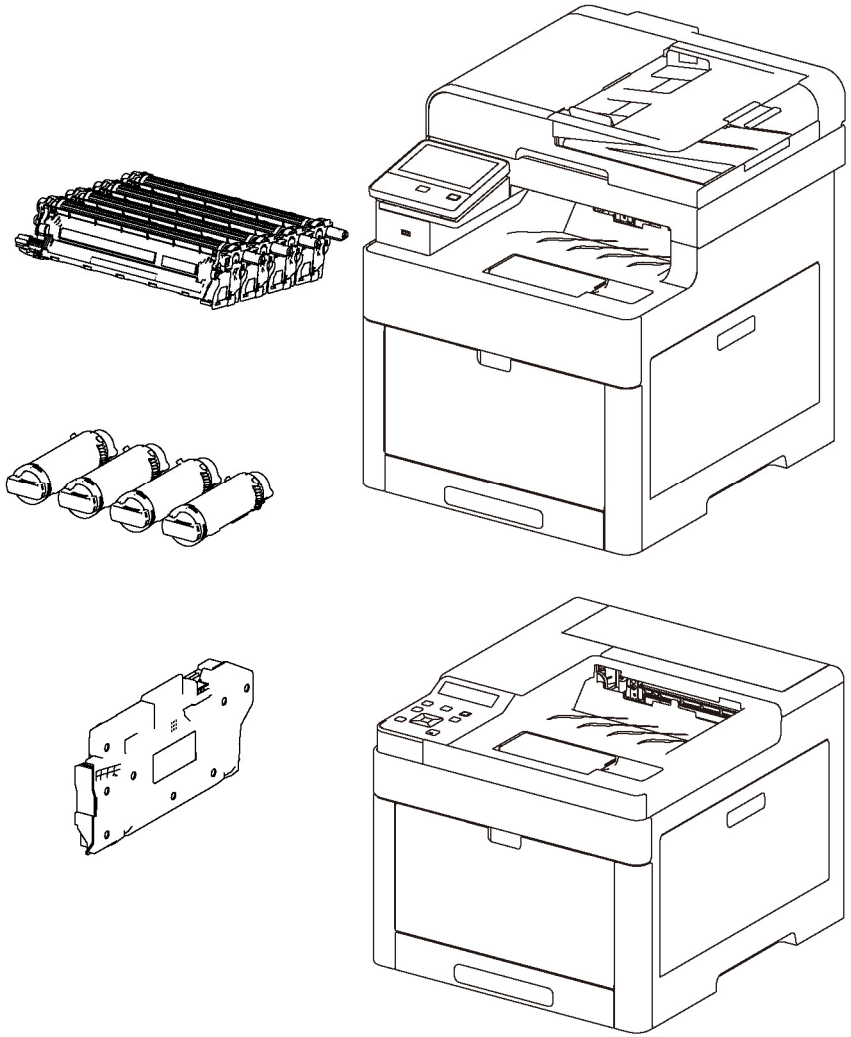

Figure 1 Basic Configuration

Functional Configuration

The functional configuration for this printer is shown in Figure 2.

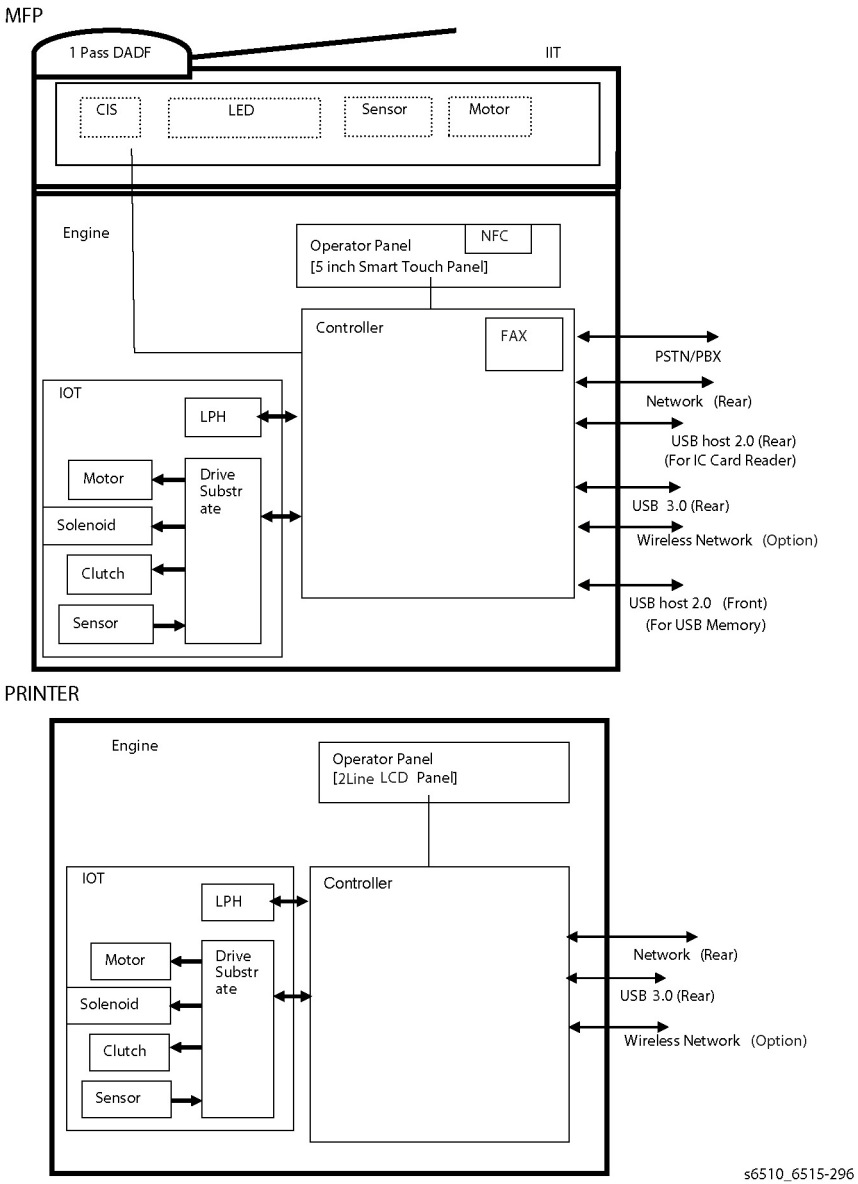

Figure 2 Functional Configuration

Consumables and Maintenance

Consumables consist of C, M, Y, and K Toner Cartridges, C, M, Y, and K Drum Cartridges, and the Waste Cartridge.

Dimensions and Mass of Consumables

The MFP and SFP contain the consumables shown in Table 1:

Table 1 Dimensions and Mass of Consumables

Consumable	Width (mm)	Depth (mm)	Height (mm)	Mass (g)
Toner Cartridges C,M,Y,K (Figure 1)	61.3	180	57.3	K: 100/120/140 C,M,Y: 90/110/120 (STD / HI / EX-HI)
Drum Cartridges C,M,Y,K (Figure 2)	77.3	335.4	78.5	720
Waste Cartridge (Figure 3)	357	176.3	33	250

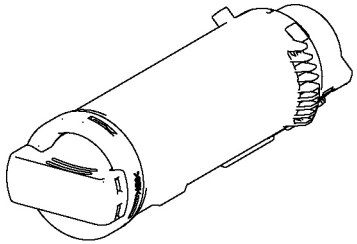

Figure 1 Toner Cartridge

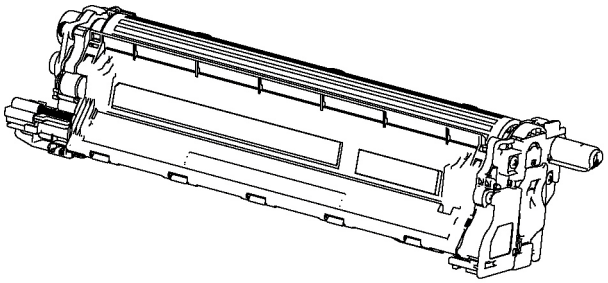

Figure 2 Drum Cartridge

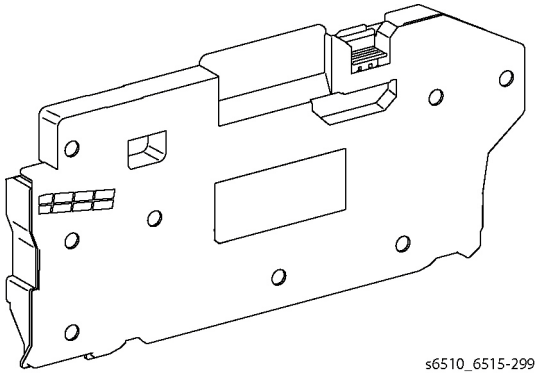

Figure 3 Waste Cartridge

Consumables Life Expectancies

Each Toner Cartridge (except starter cartridges) has a CRUM (Customer Replaceable Unit Monitor) to record regional and toner usage information. The CRUM maintains a count of the amount of toner consumed. When the count reaches set values, warning and error messages appear to notify the user when near and end of life status is reached.

Like the Toner Cartridges, each Drum Cartridge has a CRUM to maintain a page count. When the count reaches a set value, warning and error messages appear to notify the user that the Drum Cartridge has reached near or end of life status.

NOTE: *The specifications showing life ratings are correct at the time of product release. For the most current values, go to www.xerox.com.*

Life ratings are shown in Table 2.

Table 2 Life Expectancies for Consumables

Consumable		Capacity
CMYK Standard Capacity Toner Cartridges	starter cartridges	color: 1,000 black: 1,500
	sold cartridges	color: 1,000 black: 2,500
CMYK High Capacity/Extra High Capacity Toner Cartridges	sold cartridges	color: 2,500 / 4,500 black: 6,000 / N/A
	metered cartridges	color: 2,500 black: 6,000
Drum Cartridge (C,M,Y,K)		48,000
Waste Cartridge		30,000

Routine Maintenance Items

Figure 4 and Figure 5 show the routine maintenance items which are service parts:

- Fuser (110V / 220V): 100 kPV (life of machine)
- Transfer Belt unit + Transfer Roller unit: 100 kPV (life of machine)
- DADF Feed Rollers: 100 kPV (WorkCentre 6515 only) (life of machine)

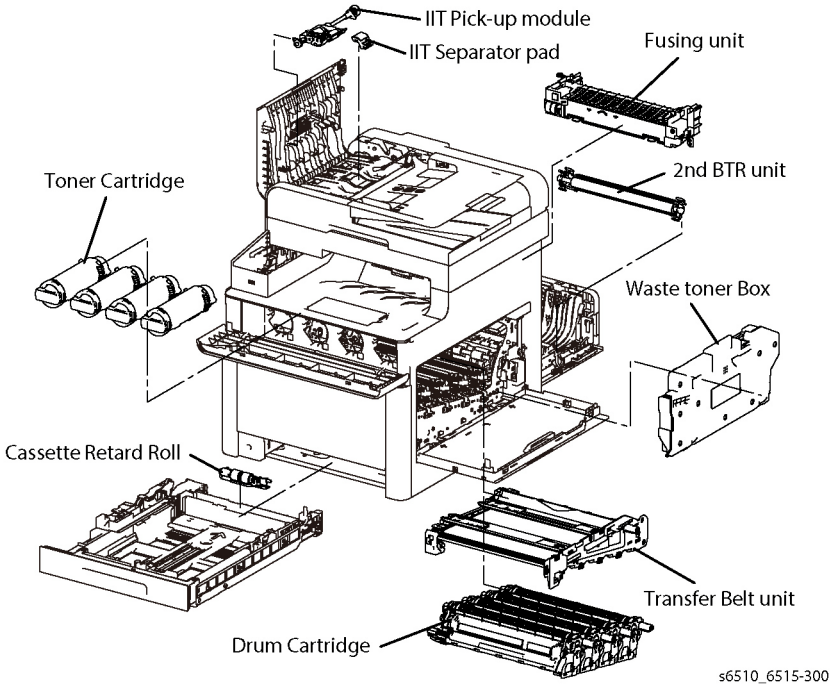

Figure 4 MFP Routine Maintenance Items

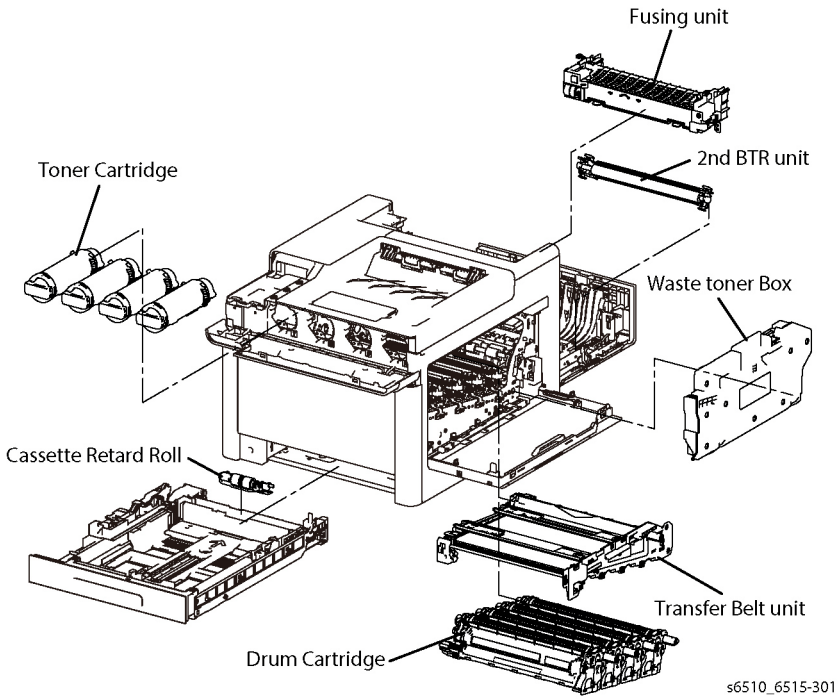

Figure 5 SFP Routine Maintenance Items

Hardware Kit

The spare parts available for repairs and maintenance includes a hardware kit. The kit contains miscellaneous screws and e-clips that can be used to replace hardware that is lost or damaged (see Table 3).

Since the 6510 and 6515 use various types of hardware (screws, e-clips), ensure that the correct hardware is used when installing parts. Use special caution not to confuse the screws used for plastic with those used for sheet metal. Using the wrong type of screw may result in damage to the screw threads or other problems.

Table 3 Hardware Kit 6510 and 6515

Type	Shape	PL Number	Size	Part Number (Qty)
Screw for plastic Silver, tapping	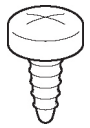	ST20	M3x8mm	115W27878 (10)
		ST21	M3x6mm	826E49690 (2)
Screw for sheet metal Silver	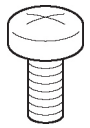	SM3	M4x6mm	113W35688 (5)
		SM18	M3x6mm	116W27678 (10)
Screw for sheet metal Silver, with washer and plane washer	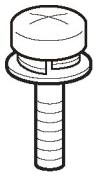	SM20	M3x8mm	112W27898 (2)
E-ring	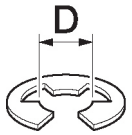	E2	D4	354W027278 (2)
		E6	D6	354W024278 (2)

1 Service Call Procedures

Service Call Procedures 1-3
SCP 1 Initial Actions 1-4
SCP 2 First Call Actions 1-4
SCP 3 Normal Call Actions 1-5
SCP 4 Fault Analysis 1-5
SCP 5 Subsystem Maintenance 1-6
SCP 6 Final Actions 1-7
SCP 7 Configurations and Options 1-7

Service Call Procedures

This section provides an overview of the steps a service technician should take to service the printer and attached options. The printer's diagnostic routines report problems using error messages and fault codes displayed on the Control Panel, logged in the Service Usage Profile, or by flashing LEDs. These error indications serve as the entry point into the troubleshooting process. System problems not directly indicated by or associated with an error message or fault code are covered in Section 6, General Procedures. Print-quality problems are covered in Section 3, Image Quality

The steps listed here are a guide for performing any service on this printer. If you choose not to use these steps, it is recommended that you start at the appropriate troubleshooting procedure and proceed from there. When servicing the printer, follow the safety measures detailed in the Service Safety Summary section.

1. Identify the problem.
   - Verify the reported problem does exist.
   - Check for any error codes and write them down.
   - Print normal customer prints and service test prints.
   - Make note of any print-quality problems in the test prints.
   - Make note of any mechanical or electrical abnormalities present.
   - Make note of any unusual noise or smell coming from the printer.
   - Print a Usage Profile, if the printer is able to print.
   - View the Engine Error and Jam Histories under the Tools menu.
   - Verify the AC input from the wall outlet is within specifications.
2. Inspect and clean the printer.
   - Follow the cleaning instructions.
   - Verify that the power cord is in serviceable condition.
   - Restart the printer to check if the error reoccurs.
3. Find the cause of the problem.
   - Use the troubleshooting procedures to find the root cause of the problem.
   - Use Service Diagnostics to check the printer and optional components.
   - Use the Wiring Diagrams and Plug/Jack Locator to locate test points.
   - Take voltage readings as instructed in the troubleshooting procedure.
4. Correct the problem.
   - Use the Parts List to locate a part number.
   - Use the Repair procedures to replace the part.
5. Final Checkout
   - Test the printer to verify the problem is corrected and no new problems arose.

Accessing Engine Fault History

Listed below are three ways in which you can access fault history. Additional fault history information appears in GP 2.

NOTE: *Error and fault code definitions appear in Section 2.*

1. Read (if possible) fault history from the Machine Status menu on the Control panel. The error history is listed on screen.
2. Accessing fault history in Service Diagnostics
3. If the printer is connected to a network and has a TCP/IP address, view the printer's web page using a web browser.
   a. Open a web browser.
   b. Enter the printer's IP address as the URL.
   c. Select > > and the fault history displays.

SCP 1 Initial Actions

Initial Actions are used to gather information on printer performance

Start a service call with SCP 1 and end with SCP 6 Final Actions.

Also refer to SCP 7.

Procedure

WARNING

Isolate the machine from the electrical supply while performing tasks that do not need electricity. Refer to GP 4. Electricity can cause death or injury. Moving parts can cause injury.

WARNING

Do not work in a confined space. 1 m (39 inches) space is needed for safe working.

NOTE: Ignore references to options not installed on the printer.

1. Take note of symptoms or error messages.
2. Ask the operator to describe or demonstrate the problem.
3. Make sure:
   a. The power cord is connected to the wall outlet and to the machine.
   b. Paper is loaded correctly and all paper trays and covers are closed
   c. If installed, the USB cable or network connection is installed correctly.
4. If available, check the service log book for any previous actions that may be relevant to the call.
5. If this is the first service call to this printer, perform SCP 2 First Call Actions, otherwise go to SCP 3 Normal Call Actions.

SCP 2 First Call Actions

First Call Actions are used for the first service call.

Procedure

1. Check the machine configuration with the customer, refer to SCP 7 Configurations and Options. Check that all required hardware and software is installed and/or enabled.
2. Check that all the relevant machine settings are correctly entered, refer to GP 4 System Administration Tools.
3. If a fault is present, go to SCP 3 Normal Call Actions. If there is no fault present, go to SCP 6 Final Actions.
4. Enter the printer and customer details in the service log.

SCP 3 Normal Call Actions

Normal Call Actions are used to determine the reason for the service call.

Procedure

NOTE: *If a fault message appears at any time. Refer directly to the RAP for the fault message and perform the procedure.*

If possible, perform the following:

1. Review any defective print samples.
2. Determine that the user accessible settings are correct. If necessary refer to the user documentation.
3. Check all job queues and verify with the customer any requirement to print the documents in memory, before switching off the power or clearing memory.
4. Print the Customer Assistance Report (Call for Assistance), then record the total print count.
5. Go to SCP 4 Fault Analysis.

SCP 4 Fault Analysis

Fault Analysis is used to identify a fault.

Procedure

When diagnosing or repairing a fault in a particular subsystem, exercise the machine in all modes until the fault is determined. In the instance of finding more than one fault or failure, correct one fault before going to the next fault. If no fault is found, go to SCP 5 Subsystem Maintenance.

Fault Codes

If a fault code is displayed, go to the relevant RAP.

Control Panel Faults

If the power is on but the Control Panel is blank, test the Control Panel with dc305.

Image Quality Defects

If the image quality is defective, go to the IQ1 Image Quality Entry RAP.

Additional Information

If necessary, refer to the following general procedures and information:

- GP 1 Using the Service Diagnostics
- GP 2 Fault Codes and History Logs
- GP 3 Device Information
- GP 4 How to Switch Off or Switch On the Printer
- GP 5 Service Copy (Tools) Mode
- GP 6 Electrostatic Discharge Prevention
- GP 7 Machine Specifications
- GP 8 General Disassembly Precautions
- GP 9 Firmware Version Upgrade
- GP 10 How to Check a Motor
- GP 11 How to Check a Sensor
- GP 12 How to Check a Solenoid or Clutch
- GP 13 How to Check a Switch
- GP 14 How to Clone Device Settings
- GP 15 Special Boot Modes
- GP 16 Separate System Modules
- GP 17 External FAX Line Test
- GP 18 Printing Reports
- GP 19 Intermittent or Noise Problem
- GP 20 How to Safely Lift or Move the Printer
- GP 21 Machine Lubrication
- GP 22 Installation Space Requirements
- GP 23 First Print Output Time
- GP 24 Restriction of Hazardous Substances (RoHS)

- GP 26 Media Specifications
- GP 27 Environmental Data
- GP 28 Supplies Plan Conversion
- GP 29 How to Check a Dispenser Motor
- GP 30 IP (ESS) Specifications
- GP 31 IIT Specifications
- GP 32 FAX Specifications
- GP 33 Interior and Exterior Cleaning
- GP 34 Cleaning the Scanner and DADF
- GP 35 Setting Up an Ethernet Connection
- GP 36 How to Manually Configure an IP Address

SCP 5 Subsystem Maintenance

Subsystem Maintenance contains information regarding the component life of the machine.

Procedure

WARNING

Isolate the machine from the electrical supply while performing tasks that do not need electricity. Refer to GP 4. Electricity can cause death or injury. Moving parts can cause injury.

1. Clean the Pick Rollers on every call.
2. Use the Control Panel to check maintenance item counters.
3. Compare the counter values to those listed in Table 1.
4. Advise the customer of any routine maintenance items that are approaching or over the service limit.

Inspection

Lubrication

CAUTION

Plastic parts deteriorate when unspecified lubricants or chemicals are used. To avoid damage, use only approved lubricant.

The printer is lubricated during assembly at the factory and does not require periodic lubrication. Some parts require lubrication following replacement. These parts are identified in the replacement procedures. When lubricating during replacement, use approved grease.

Component Life

The design life of the major components are shown in Table 1. Environmental conditions and actual use will vary these factors. The component life shown in Table 1 is for reference only.

Table 1

1.	Pick and Nudger Rollers	100,000 pages
2.	Separator Roller	100,000 pages
3.	Transfer Unit / Transfer Roller	100,000 images
4.	Fuser	100,000 images
5.	Feed Rollers	100,000 pages
6.	Waste Cartridge	30,000 pages
7.	Drum Cartridge	48,000 pages

SCP 6 Final Actions

Final Actions are used to evaluate the total operation of the system and to identify the actions required to complete the service call.

Procedure

Complete the following, if a fault is identified, return to SCP 4 Fault Analysis:

- Perform the end of call subsystem maintenance actions, SCP 5 Subsystem Maintenance.
- Exercise the machine in all modes, printing from all trays. If a fault message is displayed or some other problem is evident, go to SCP 4 Fault Analysis.
- Make a print of a customer document.
- If any of the customers selections were changed, return them to the customers preferred settings. Refer to GP 4 System Administration Tools.
- At the first service and at any subsequent service where changes are made or options are added, print the configuration report and store it with machine log book. Discard any previous versions of the configuration report.
- Remove and destroy any copies of test patterns.
- Ensure the machine and service area are clean before leaving the customer premises.
- Provide customer training if required.

SCP 7 Configurations and Options

Configurations and Options

Refer to Table 1 for basic configurations and options. This service manual covers all configurations. Within this manual ignore any references to options that are not installed.

Table 1

Processor Speed	LM2 Cortex A15 1.1Ghz Cortex A7 733Mhz Cortex M3 x 2	LM2 Cortex A15 1.1Ghz Cortex A7 733Mhz Cortex M3 x 2
Memory std / max	DDR3 667Mhz 1GB / 1 GB	DDR3 667Mhz 2GB / 2GB
Print Speed	Color: 30ppm Mono: 30ppm	Color: 30ppm Mono: 30ppm
USB 2.0 front / back (host)	USB 2.0	Standard
USB 3.0 rear (target)	Standard	Standard
Near Field Comm (NFC)	N/A	Standard
Single-Pass Duplex Automatic Document Feeder (DADF)	N/A	Standard
Bypass Tray (50 sheet)	Standard	Standard
Tray 1 (250 sheet)	Standard	Standard
Tray 2 (550 sheet)	Optional	Optional
Duplex Printing	Standard	Standard
FAX	N/A	Standard
Wireless LAN	Optional	Optional
Printer Resolution	600 x 600 dpi 1200 x 2400 dpi	600 x 600 dpi 1200 x 2400 dpi

Chapter 2 Status Indicator Repair Analysis Procedures

Troubleshooting Overview 2-9

Chain 001 - 005

1DC +5VDC Power Fault RAP 2-13
1AC +24VDC Power Fault RAP 2-13
002-500 UI Error RAP 2-14
003-311 IIT CDI I/F Mismatch 2-14
003-318, 003-319 IIT Software Fail 2-15
003-320 to 003-343 IISS-ESS Communication Fail 2-15
003-344 IISS-ESS X Hotline Fail 2-16
003-345, 003-346 X PIO Mismatch RAP 2-17
003-700 Returned Documents Error RAP 2-17
003-701 Duplication Prevention Code RAP 2-18
003-702 Different Magnification RAP 2-18
003-703, 003-704 Color Correction RAP 2-19
003-705 Energy Saving Paper Size Mismatch RAP 2-19
003-750 Insufficient Documents Duplex Book RAP 2-20
003-751 Capacity RAP 2-20
003-752, 932, 935 600dpi Cannot be Scanned RAP 2-21
003-753, 913, 930, 933 300dpi Cannot be Scanned RAP 2-21
003-754, 756 S2X Error RAP 2-22
003-757, 931, 934 400dpi Cannot be Scanned RAP 2-22
003-760, 003-761 Scan Settings Error RAP 2-23
003-763 Adjustment Chart Not Found RAP 2-23
003-764 Document Insufficient (image overlay) RAP 2-24
003-780 Scan Image Compression Error RAP 2-24
003-795 AMS Limit Error RAP 2-25
003-940 Insufficient Memory RAP 2-25
003-941 Insufficient Page Memory RAP 2-26
003-942, 956 Document Size Auto Detect RAP 2-26
003-944 Repeat Image Count Fail RAP 2-27
003-946 Image Rotation (Copy APS) RAP 2-27
003-947, 948 Document Error RAP 2-28
003-952 Document Color Mismatch RAP 2-28
003-955 Documents Size Exchange Error RAP 2-29
003-956 Documents Size Unknown Error RAP 2-29
003-963, 965, 966 ATS/APS RAP 2-30
003-970, 976 FAX Line Memory RAP 2-30
003-971 Prevention Code Detect With The Right To Cancel RAP 2-31
003-972 Maximum Stored Page RAP 2-31
003-973 Image Rotation RAP 2-32
003-974 Next Original Specification RAP 2-32
003-977 Document Mismatch (Multi Scan) RAP 2-33
003-978 Color Document Mismatch (Multi Scan) RAP 2-33
005-121, 123, 124, 125, 210, 275, 305, 900, 906, 908, 911, 940 DADF JAM RAP 2-34
005-500 Write to DADF-ROM Error RAP 2-34
005-941 Not Enough Documents RAP 2-35

Chain 010 - 018

010-105, 106 FUSING ASSY Exit Sensor RAP 2-37
010-331, 338, 344, 058-310, 311, 315, 316, 059-315, 326, 099-396-399 FUSING ASSY RAP 2-38
016-211, 016-212 SW Option Fail Memory Low RAP 2-39
016-214 SW Option Fail (FAX Card) RAP 2-40
016-234, 016-235 XCP Error RAP 2-40
016-242 System GMT Clock Fail RAP 2-41
016-244 Self-Signed Certificate Auto Update Fail RAP 2-41
016-310 SSMM Job Log Full RAP 2-42
016-311, 315, 319, 062-277, 311, 316, 360, 371, 380, 386, 389, 393, 396, 065-221 to 225 Scanner/IIT Errors RAP 2-42
016-320 Document Formatter Fatal Error RAP 2-43
016-321 FAX Module Error RAP 2-44
016-323 B-Formatter Fatal Error RAP 2-44
016-324 Scheduled Image Overwrite RAP 2-45
016-325 Using Personal Certificate RAP 2-45
016-326, 362, 607 UI Cable Connection Fail RAP 2-46
016-328 Connection Fail RAP 2-46
016-330, 331, 332 Cont System Memory Fail RAP 2-47
016-342 to 016-345 Controller Fail RAP 2-47
016-346 Cont A4FAX Modem Diagnosis Fail RAP 2-48
016-349, 350, 351 eMMC Card Errors RAP 2-48
016-352, 609, 610 Internal Network Init/PCI/PCIEX Fail RAP 2-49
016-353, 356, 606 IOT-Controller Communication Fail RAP 2-49
016-355, 016-356 Controller ASIC Fail RAP 2-50
016-359, 360, 361 Controller USB Fail RAP 2-50
016-370 Controller Diagnostic Fail RAP 2-51
016-371 Controller USB 1.1 Host Fail RAP 2-51
016-383 Controller OS Communication Fail RAP 2-52
016-400, 401, 402, 403, 406 802.1x Authentication Failure - Network1 RAP 2-52
016-404 802.1x Inside Failure RAP 2-53
016-405 Certificate DB File Error RAP 2-53
016-407 to 016-412 XCP Error RAP 2-54
016-422, 016-423 Offline RAP 2-54
016-424, 016-425 Power Mode RAP 2-55
016-426 DHCP Error RAP 2-55
016-427, 428, 429, 430, 431, 432 802.1x Failures (Network 2) RAP 2-56
016-450 SMB Host Name Duplicated RAP 2-56
016-453, 016-454 IPv6/Dynamic DNS Falure RAP 2-57
016-455, 016-456 SNTP Time Out RAP 2-57
016-461 Under Non-transmitted Image Log Stagnation RAP 2-58
016-500 ROM Write Error (During DLD Method) RAP 2-58
016-503, 504, 505 SMTP Server Fail for Redirector RAP 2-59
016-507, 016-508 Image Log Send Fail RAP 2-60
016-509, 016-510 Image Log No Send Rule RAP 2-60
016-511, 016-512 Image Log Invalid Send Rule RAP 2-61
016-513 SMTP Server Reception Error RAP 2-61

016-514 XPS Error RAP 2-62
016-515 XPS Short of Memory 2-62
016-516 XPS Print Ticket Description Error RAP 2-63
016-519 Device DV Limit Reached RAP 2-63
016-522 LDAP SSL Error 112 RAP 2-64
016-523 LDAP SSL Error 113 RAP 2-64
016-524, 016-525 LDAP SSL Error 114 and 115 RAP 2-65
016-526 LDAP SSL Error 116 RAP 2-65
016-527 LDAP SSL Error 117 RAP 2-66
016-529 Remote Download Server Timeout RAP 2-66
016-533 Kerberos Attestation Protocol Error 37 RAP 2-67
016-534 Kerberos Attestation Protocol Error 41 and 42 RAP 2-67
016-535 Remote Download File Access Error RAP 2-68
016-536 Host Name Solution Error in Remote Download RAP 2-68
016-537 Remote Download Server Connection Error RAP 2-69
016-539 Kerberos Attestation Other Protocol Error RAP 2-69
016-543, 545, 546, 548, 553, 554, 555, 556, 557, 558 Attestation Agent Error RAP 2-70
016-559 Remote Download Parameter Error RAP 2-71
016-560 Attestation Agent Error 560 RAP 2-71
016-562 Detected User Duplication RAP 2-72
016-563 ImageLog Memory Full (Exp. Kit) RAP 2-72
016-564 Remote Download Server Authentication Failed RAP 2-73
016-570 Job Ticket Out of Memory RAP 2-73
016-571 Job Ticket Wrong Parameters RAP 2-74
016-572 Job Ticket Media Error RAP 2-74
016-573 Job Ticket Parse Error RAP 2-75
016-574 FTP Host Name Solution Error RAP 2-75
016-575 FTP DNS Server Error RAP 2-76
016-576 FTP Server Connection Error RAP 2-76
016-577 FTP Service RAP 2-77
016-578 FTP Login Name or Password Error RAP 2-77
016-579 FTP Scanning Picture Preservation Place Error RAP 2-78
016-580 FTP File Name Acquisition Failure RAP 2-78
016-581 FTP File Name Suffix Limit RAP 2-79
016-582, 016-588 FTP File Creation Failure RAP 2-79
016-583, 016-584 FTP Folder Creation Failure RAP 2-80
016-585, 587, 589 FTP File Delete/Read Failure RAP 2-80
016-586 FTP Lock Folder Delete Failure RAP 2-81
016-590 FTP Data Reading Failure RAP 2-81
016-591 FTP Scan Filing Policy RAP 2-82
016-592 FTP DAT File Access Error RAP 2-82
016-593 to 016-596 FTP Error RAP 2-83
016-597 Same File on FTP Server RAP 2-83
016-598, 016-599 Email Message Size RAP 2-84
016-600, 601 KO Authentication Locked RAP 2-84
016-604 Debug Log Created RAP 2-85
016-700 Password Below Minimum RAP 2-85
016-702 Out of Page Buffer RAP 2-86
016-706 Maximum User Number Exceeded RAP 2-86
016-711 Email Transmission Size Limit RAP 2-87
016-712 Panther Capacity RAP 2-87
016-713, 714 Security Box Error RAP 2-88
016-715 ESCP Form Invalid Password RAP 2-88
016-718 Out of PCL6 Memory RAP 2-89
016-719 Out of PCL Memory RAP 2-89
016-720 PCL Command Error RAP 2-90
016-721 Settings Error RAP 2-90
016-725 B-Formatter Library Image Conversion Error RAP 2-91
016-726 PDL Auto Switch Fail RAP 2-91
016-728 Unsupported TIFF Data RAP 2-92
016-729 TIFF Data Size RAP 2-92
016-731, 016-732 Invalid Data RAP 2-93
016-733 Destination Address Resolution Error RAP 2-93
016-735 Updating Job Template RAP 2-94
016-741 Download Mode Fail RAP 2-94
016-742 Download Data Product ID Mismatch RAP 2-95
016-743 Device Model/Panel Type Error RAP 2-95
016-744 Download Data CheckSum Error RAP 2-96
016-745 Download Data XPJL Fatal Error RAP 2-96
016-746, 016-751 Unsupported PDF File RAP 2-97
016-747 Drawing Annotation Memory RAP 2-97
016-749 JCL Syntax Error RAP 2-98
016-750 Print Job Ticket Description Error RAP 2-98
016-752 PDF Short of Memory RAP 2-99
016-753 PDF Password Mismatched RAP 2-99
016-755 PDF Print Prohibited RAP 2-100
016-756 Auditron-Prohibit Service RAP 2-100
016-760 PS Decompose Failure RAP 2-101
016-761 FIFO Empty RAP 2-101
016-762 Print Language Not Installed RAP 2-102
016-763 POP Server Connect RAP 2-102
016-764 SMTP Server Connect RAP 2-103
016-765, 016-766 SMTP Server Error RAP 2-103
016-767 Invalid Email Address RAP 2-104
016-768 Invalid Sender Address RAP 2-104
016-769 SMTP Server Unsupported DSN RAP 2-105
016-770 Direct FAX Function Canceled RAP 2-105
016-772 Scan Data Repository Error RAP 2-106
016-776 Image Conversion Error RAP 2-106
016-779 Scan Image Conversion Error RAP 2-107
016-781 Server Connect Error RAP 2-107
016-788 Retrieve to Browser Failed RAP 2-108
016-790 Email Fragment Over RAP 2-108
016-792 Specified Job Not Found RAP 2-109
016-794 Media Not Inserted RAP 2-109
016-795 Media Reader Format Error RAP 2-110
016-796 Document Insert Operation Error RAP 2-110
016-797 Image File Read Error RAP 2-111
016-799 PLW Print Instruction Fail RAP 2-111
016-910, 016-911 Required Resource Not Ready RAP 2-112
016-985 Scan to Email Data Size RAP 2-112
017-500 Job Limit Illegal Response RAP 2-113
017-501 Multiple Permission Restrictions RAP 2-113
017-503 Password Over Maximum RAP 2-114

017-504, 017-505 JobLimit Server Connection Fail RAP 2-114
017-713 Start TLS Unsupported Fail RAP 2-115
017-714 SMTP Over SSL Fail RAP 2-115
017-715 SSL Certificate Fail RAP 2-116
017-716, 717, 718 SSL Certificate (SMTP) Fail RAP 2-116
017-719 SMTP Over SSL Internal Fail RAP 2-117
017-720, 017-721 PJL Command Fail RAP 2-117
017-722 Total Impressions Over Fail RAP 2-118
017-725 Forced Annotation Syntax Fail RAP 2-118
017-728 Scan Job-Flow Document Fail RAP 2-119
017-730 Network Error in PDL Transfer RAP 2-119
017-731 POP Server Not Connected RAP 2-120
017-732 Offline Error in PDL Transfer RAP 2-120
017-733 Internal Error in PDL Transfer RAP 2-121
017-734 IPP Data Error RAP 2-121
017-737, 017-738 Out of Memory Fail RAP 2-122
017-739, 017-740 Transfer Service Not Available RAP 2-122
017-741 Custom Transfer Invalid Plug-In RAP 2-123
017-742, 743, 744 Custom Transfer Plug-In Connection RAP 2-123
017-747 Custom Transfer Plug-In Connection Timeout RAP 2-124
017-748 Custom Transfer Plug-In Invalid Device RAP 2-124
017-749 Custom Transfer Plug-In XML Fail RAP 2-125
017-750 Custom Transfer Plug-In Internal Fail RAP 2-125
017-751 Custom Transfer Plug-In Other Fail RAP 2-126
017-755 Software Download Via Network Fail RAP 2-126
017-759 Download Data Inspection Error RAP 2-127
017-760, 017-766 POP Over SSL Fail RAP 2-127
017-761, 017-767 SSL Server Cert Untrusted (POP) RAP 2-128
017-762, 764, 768, 769, 770 SSL Certificate (POP) Fail RAP 2-128
017-765, 017-771 POP Over SSL Internal Fail RAP 2-129
017-772 Scan All Blank Page Fail RAP 2-129
017-773 Netlog Task Error RAP 2-130
017-774 Message Lost Error RAP 2-130
017-775 Network API Error RAP 2-131
017-776, 017-777 Syslog Server Error RAP 2-131
017-778 Queue Error RAP 2-132
017-779 Link Error RAP 2-132
017-780 Held Job Timeout RAP 2-133
017-782, 784, 785, 786 Custom Image Processing Plug-In RAP 2-133
017-783 Custom Image Processing Memory RAP 2-134
017-787 Google Cloud Print Data Error RAP 2-134
017-789 Job Limit Estimation Logic Fail RAP 2-135
017-790 to 017-799 Print Permission RAP 2-135
018-400 IPSEC Configuration Mismatch RAP 2-136
018-405 User Account Disabled RAP 2-136
018-406 Setting Status of IP Address (IPv4) RAP 2-137
018-407 Setting Status of IP Address (IPv6) RAP 2-137
018-409, 412, 413 Duplicate IPv6 Address 1 RAP 2-138
018-410, 018-411 Dynamic DNS Update Failure RAP 2-138
018-414 Duplicate IPv6 Address 2 RAP 2-139
018-415 Duplicate IPv6 Address 3 RAP 2-139
018-416 Duplicate IPv6 Address 4 RAP 2-140
018-424 WLAN WPA-Enterprise Certificate Empty Failure RAP 2-140
018-425 WLAN WPA-Enterprise Certificate Unavailability Failure RAP 2-141
018-426 WLAN WPA-Enterprise server certificate failure 2-141
018-427 Duplicate IP address range Wi-Fi and Wi-Fi Direct 2-142
018-428 WLAN Module Connection Failure RAP 2-142
018-429, 430 Duplicate IP address IPv4 (WiFi) RAP 2-143
018-431 Duplicate IPv6 address (WiFi) RAP 2-143
018-432 Duplicate IPv6 address (WiFi) RAP 2-144
018-433 Duplicate IPv6 address (WiFi) RAP 2-144
018-434 Duplicate IPv6 address (WiFi) RAP 2-145
018-435 Duplicate IPv6 address (WiFi) RAP 2-145
018-436 Duplicate IPv6 Address (WiFi) RAP 2-146
018-500, 501, 503, 504, 506 , 507, 508 CA Server Error RAP 2-146
018-502 SMB Login Failure RAP 2-147
018-505 SMB-DOS Protocol Error RAP 2-147
018-509 Template Parameter Conflict RAP 2-148
018-524 Invalid Device Network Setting RAP 2-148
018-526 to 018-529, 531, 532 CUI Scan Error RAP 2-149
018-530 Authentication Error RAP 2-149
018-543 Shared Name Error in SMB Server RAP 2-150
018-547 SMB Scan Users Restriction RAP 2-150
018-556 HTTP Server Script Error RAP 2-151
018-557 HTTP Invalid Character in Filename RAP 2-151
18-558 HTTP File Not Found RAP 2-152
018-559 HTTP File Duplication Fail RAP 2-152
018-560 to 018-563 HTTP Server Login Fail RAP 2-153
018-564 Host Name Solution Error in HTTP RAP 2-153
018-565 Proxy Name Solution Error in HTTP RAP 2-154
018-566, 018-567 Server Connect Error in HTTP RAP 2-154
018-568 HTTP Server SSL Access Fail RAP 2-155
018-569 HTTP Server Certificate Fail RAP 2-155
018-570 HTTP Certificate Fail RAP 2-156
018-571 Internal Error in Scan RAP 2-156
018-587 File Duplication Fail RAP 2-157
018-588 Scan Filing Policy Invalid RAP 2-157
018-589 NEXTNAME File Error RAP 2-158
018-590 Same Name Exists RAP 2-158
018-591 File Name Suffix Over Limit RAP 2-159
018-592, 018-593 Lock Folder Fail RAP 2-159
018-595 Detected User Duplication RAP 2-160
018-596, 018-700 Network Error RAP 2-160
018-701 to 018-705 LDAP Protocol Errors 01 to 05 RAP 2-161
018-709 Active Communication is Unavailable Now Fail RAP 2-161
018-710 to 018-714 LDAP Protocol Errors 10 to 14 RAP 2-162
018-715 Kerberos Attestation Protocol Error 73 RAP 2-162
018-716 to 018-721 LDAP Protocol Errors 16 to 21 RAP 2-163
018-722 GCP Network Fail RAP 2-163
018-723, 018-740 GCP Certification Fail RAP 2-164
018-724 GCP SSL Connection Fail RAP 2-164
018-725 Kerberos Attestation Protocol Error 22 RAP 2-165
018-726 Kerberos Attestation Protocol Error 70 RAP 2-165
018-727 Kerberos Attestation Protocol Error 71 RAP 2-166

018-728 Kerberos Attestation Protocol Error 72 RAP 2-166
018-729, 730, 738, 739, 743, 744, 745, 746 GCP Network Fail RAP 2-167
018-732 to 018-736 LDAP Protocol Errors 32 to 36 RAP 2-167
018-737, 018-741 GCP Other Fail RAP 2-168
018-747 Server Not Found in SMB RAP 2-168
018-748, 018-750 to 018-754 LDAP Protocol Errors 48, 50 to 36 RAP 2-169
018-749 LDAP Protocol Error 49 RAP 2-169
018-755 Server Connection Error in SMB RAP 2-170
018-756 Server Login Response Timeout in SMB RAP 2-170
018-757 Host Name Solution Error in SMB RAP 2-171
018-758, 018-759 Picture Preservation or File Name Error RAP 2-171
018-760 DFS Link Error in SMB RAP 2-172
018-761 Out of Server Memory in SMB RAP 2-172
018-762 Server Response Timeout in SMB RAP 2-173
018-763 Character Convert Error in SMB RAP 2-173
018-764, 765, 766, 767. 768, 769, 771 LDAP Protocol Errors RAP 2-174
018-770 LDAP Protocol Error 70 RAP 2-174
018-772 Shared Name Not Found in Server RAP 2-175
018-773 Shared Name Error in Server RAP 2-175
018-780 to 018-784 LDAP Protocol Errors 80 and 82 to 84 RAP 2-176
018-781 LDAP Protocol Error 81 RAP 2-176
018-785 LDAP Protocol Error 85 RAP 2-177
018-786 to 797 LDAP Protocol Errors 86 to 97 RAP 2-177

Chain 021 - 029

021-210, 211, 212 USB IC Card Reader Error RAP 2-179
021-214 USB IC Card Reader Encryption Setting RAP 2-179
021-401 USB IC Card Reader Connection Error RAP 2-180
021-505, 021-506 SSL Error RAP 2-180
021-509, 515, 516, 522 Invalid Message Detected RAP 2-181
021-523 Internal Error RAP 2-181
021-524 to 012-528 Communications Error RAP 2-182
021-533, 534 Unsupported ROM Set RAP 2-182
023-500 UI ROM Download Fail RAP 2-183
023-600, 023-601 UI Key Error RAP 2-183
024-312, 313, 314, 315 IOT NVM Backup Restore RAP 2-184
024-340 to 024-360 IOT-ESS Communication Fail 1 RAP 2-184
024-361 Invalid IOT Paper Size RAP 2-185
024-362, 024-363 Page Sync Illegal Start or Stop RAP 2-186
024-364 DMA Transfer Fail RAP 2-186
024-365 Overflow on Loop Back Write RAP 2-187
024-366 JBIG Library Other Fail RAP 2-187
024-367 Decompress Other Fail RAP 2-188
024-368 PCI Error RAP 2-188
024-370 Marker Code Detection Fail RAP 2-189
024-371 to 024-373, 024-375 IOT-ESS Communication Fail 2 RAP 2-189
024-376 IOT-ESS Communication Fail 25 RAP 2-190
024-600 to 024-614 Counter Repair RAP 2-190
024-615 IOT Unsupported Drum Shut Off RAP 2-191
024-616 to 024-618 Serial Number RAP 2-191
024-619 to 024-621 Product Number RAP 2-192
024-701 Invalid Instruction of Face Inversion RAP 2-192
024-702 Paper Jam RAP 2-193
024-705 Forced Annotation Template Fail RAP 2-193
024-707 Duplex Inversion Prohibited (Duplex) RAP 2-194
024-708 Duplex Inversion Prohibited (Face Down) RAP 2-194
024-746, 024-747 Print Request Failure RAP 2-195
024-748 Bates Numbering Digit Exceeded RAP 2-195
024-910, 946, 959 Tray 1 Size Mismatch RAP 2-196
024-911, 947, 960 Tray 2 Size Mismatch RAP 2-196
024-923, 924, 925 TONER CARTRIDGE Empty RAP 2-197
024-933, 940, 941 DRUM CARTRIDGE Y Life End RAP 2-198
024-934 Paper Type Mismatch RAP 2-198
024-950 Tray 1 Empty RAP 2-199
024-951 Tray 2 Empty RAP 2-199
024-954, 958 Bypass Tray Out Of Paper RAP 2-200
024-965, 024-966 ATS/APS RAP 2-200
026-400 USB Host Connection Number Exceeded RAP 2-201
026-402 Changed IOT Speed RAP 2-201
026-403 Stop printing and wait for toner cooling RAP 2-202
026-700 LDAP Protocol Error RAP 2-202
026-701 Address Book Request Overflow RAP 2-203
026-702 Address Book Directory Service Overflow RAP 2-203
026-703 Abort With Logout RAP 2-204
026-708 URL Data Over Size RAP 2-204
026-710 S/MIME Unsupported Cipher RAP 2-205
026-711 Multi-Page File Size RAP 2-205
026-712 HTTP Out Job Overlap Error RAP 2-206
026-718 PS Print Instruction Fail RAP 2-206
026-719 Internal Error in Scan RAP 2-207
026-720 to 026-723 Media Error RAP 2-207
026-726 Inconsistent Options RAP 2-208
026-727 Media Filepath Fail RAP 2-208
026-728, 026-729 WSD Scan Error RAP 2-209
026-730 Tray Paper Size Not Detected RAP 2-209
026-731 to 026-733 PJL Fail RAP 2-210
026-734 PJL Diag Mode RAP 2-210
026-739 Waiting Scan Job Deleted RAP 2-211
027-442, 443, 444 Duplicate IP Address 1 RAP 2-211
027-445 Illegal IP Address RAP 2-212
027-446 Duplicate IP Address 2 RAP 2-212
027-447 Duplicate IP Address 3 RAP 2-213
027-452 Duplicate IP Address 4 RAP 2-213
027-500 SMTP Server Fail for Mail IO RAP 2-214
027-501 POP Server Fail for Mail IO RAP 2-214
027-502 POP Authentication Fail for Mail IO RAP 2-215
027-503, 504, 533, 773, 785, 786 Server Communication Timeout RAP 2-215
027-513 SMB Scan Client Access RAP 2-216
027-514 Host Name Solution Error in SMB RAP 2-216
027-515 DNS Server Setup in SMB RAP 2-217
027-516 Server Connection Error in SMB RAP 2-217
027-518 Login Name or Password Error in SMB RAP 2-218
027-519 Scanning Picture Preservation Place Error RAP 2-218
027-520 File Name Acquisition Failure RAP 2-219

027-521 File Name Suffix Limit Over in SMB RAP 2-219
027-522 File Creation Failure in SMB RAP 2-220
027-523 Lock Folder Creation Failure in SMB RAP 2-220
027-524 Folder Creation Failure in SMB RAP 2-221
027-525, 027-527 File Delete Failure in SMB RAP 2-221
027-526 Lock Folder Delete Failure in SMB RAP 2-222
027-528 Data Write Failure to SMB Server RAP 2-222
027-529 Data Read Failure From SMB Server RAP 2-223
027-530 File Name Duplicate Failure in SMB RAP 2-223
027-531 SMB Scan Filing Policy Injustice RAP 2-224
027-532 NEXTNAME File Access Error in SMB RAP 2-224
027-543 SMB Server Name Specification Error RAP 2-225
027-547, 027-548 SMB Protocol Errors 1 RAP 2-225
027-549, 027-572 to 027-576 SMB Protocol Error 4-009 RAP 2-226
027-564 SMB Protocol Error 4-024 RAP 2-226
027-565, 027-578 SMB Protocol Errors 2 RAP 2-227
027-566 SMB Protocol Error 4-026 RAP 2-227
027-569 SMB (TCP/IP) Not Started RAP 2-228
027-584 SMB Protocol Error 4-044 RAP 2-228
027-585 SMB Protocol Error 4-045 RAP 2-229
027-586 SMB Protocol Error 4-046 RAP 2-229
027-587 SMB Protocol Error 4-047 RAP 2-230
027-588, 027-589 SMB Protocol Errors 3 RAP 2-230
027-590 SMB Protocol Error 4-050 RAP 2-231
027-591 SMB Protocol Error 4-051 RAP 2-231
027-700 Mail Address Domain Error RAP 2-232
027-701 Disconnected Network Cable RAP 2-232
027-702 to 027-709 Certificate for Addresses Error RAP 2-233
027-710 to 027-716 S/MIME Mail Error RAP 2-233
027-717 No MX Record at DNS RAP 2-234
027-720, 027-721 Extension Server Error RAP 2-234
027-722 Extension Server Timeout RAP 2-235
027-723 Extension Server Authentication Fail RAP 2-235
027-724, 725, 726 Extension Server Access Fail RAP 2-236
027-727 Extension Server Parameters RAP 2-236
027-728 Extension Server File Exceeded RAP 2-237
027-730 SMTP Mail Division Error RAP 2-237
027-732 Server Access Error RAP 2-238
027-733 Server SSL Error RAP 2-238
027-734 Server Certificate Error RAP 2-239
027-735 Device SSL Configuration Error RAP 2-239
027-736 Device Certificate Error RAP 2-240
027-737 Template Server Read Error RAP 2-240
027-739 Invalid Template Server Path RAP 2-241
027-740 Template Server Login Error RAP 2-241
027-741 Template Server Connect Fail RAP 2-242
027-743 Template Server Install Error RAP 2-242
027-744 Template Server Error 1 RAP 2-243
027-745 Template Server Error 2 RAP 2-243
027-746 Job Template Pool Server Not Ready RAP 2-244
027-750 Fax Document Incongruent RAP 2-244
027-751 Job Template Analysis Error RAP 2-245
027-752 Required User Entry Not Entered RAP 2-245
027-753 Job Flow Service Request Disabled RAP 2-246
027-754 Job Flow Service File Signature Mismatch RAP 2-246
027-757 Extension Server SSL Fail RAP 2-247
027-758 System Credential Setting Error RAP 2-247
027-759 Reference Server Connection Error RAP 2-248
027-760 XJT Command Fail RAP 2-248
027-761 Web Print Timeout RAP 2-249
027-762 Illegal Web Print Job Ticket RAP 2-249
027-765 Host Name Solution Error in WebDAV RAP 2-250
027-766 Proxy Name Solution Error in WebDAV RAP 2-250
027-767 WebDAV Server SSL Access Fail RAP 2-251
027-768 WebDAV Server Certificate Fail RAP 2-251
027-769 WebDAV Server Access Fail RAP 2-252
027-772, 774, 776 SMTP Server Error RAP 2-252
027-775 Too Many SMTP Addresses RAP 2-253
027-777 SMTP Server Non Support RAP 2-253
027-778 No Mode Specified by SMTP-AUTH RAP 2-254
027-779 Attestation-Fails by SMTP-AUTH RAP 2-254
027-780 WebDAV Network Interface Fail RAP 2-255
027-781 WebDAV Spool Size Over RAP 2-255
027-782 WebDAV Server Redirector Limit RAP 2-256
027-783 WebDAV User Authentication RAP 2-256
027-784 WebDAV Proxy Server Authentication RAP 2-257
027-785, 786 WebDAV Server Time-Out RAP 2-257
027-787 WebDAV File Name Duplication Fail RAP 2-258
027-788, 027-793 WebDAV Request Fail RAP 2-258
027-789, 791, 795 Access Forbidden RAP 2-259
027-790, 029-792 WebDAV File Not Found RAP 2-259
027-794 WebDAV Server Internal Fail RAP 2-260
027-796 Email Not Printed RAP 2-260
027-797 Invalid Output Destination RAP 2-261
027-798 JFS Target Document Not Found RAP 2-261
027-799 WebDAV Server Insufficient Storage RAP 2-262
028-910 Wrong Fuser Type RAP 2-262
028-912 Fusing Unit Lever Envelope Fail RAP 2-263
029-700, 029-701 WebDAV Server Response RAP 2-263
029-702 WebDAV Client RAP 2-264
029-704, 711 Invalid PACFile RAP 2-264
029-705, 706, 709, 712, 713, 716 PACFile Communications RAP 2-265
029-707, 029-708, 714, 715 PACFile Not Found RAP 2-265
029-710, 029-717 PACFile URL Not Found RAP 2-266

Chain 033

033-310 FAX Charge Function Fail RAP 2-267
033-311 Invalid Address Book Data RAP 2-267
033-312, 318, 324 FAX Fault RAP 2-268
033-328, 329, 340 Failed to Initialize FAX Log RAP 2-268
033-328 to 033-336 Non-mounted Channel RAP 2-269
033-339 FAX 2 Not Responding RAP 2-269
033-363 FAX Card Reset (Reboot) RAP 2-270
033-500 to 033-507 Remote Machine Error RAP 2-270

033-508, 033-511 Destination Polling Error RAP 2-271
033-509 DCS/NSS Resend Exceeded RAP 2-271
033-510 Fallback Error RAP 2-272
033-514, 516, 517, 521, 522, 033-526 to 033-529 Remote Machine Error 1 RAP 2-272
033-523, 546, Line Not Connected RAP 2-273
033-530 DTMF Illegal Procedure RAP 2-273
033-531, 532, 533, 544, 552, 578 Remote Machine Error 2 RAP 2-274
033-535 DCN Receive at Phase B Send RAP 2-274
033-536, 537, 540, 568, 575, 577 Send/Receive Error RAP 2-275
033-541, 033-566 No Destination Specified RAP 2-275
033-543, 567, 576, 702, 703 Dial Error RAP 2-276
033-545 T0 Timeout RAP 2-276
033-547 Abort During Transmission RAP 2-277
033-548 No Manual Send Line RAP 2-277
033-549, 551, 583 FAX Service Disabled RAP 2-278
033-550 Cannot Disable FAX Service RAP 2-278
033-553 No Folder/Relay RAP 2-279
033-554 Wrong Password/Receive Banned RAP 2-279
033-555, 033-556 Incorrect Password RAP 2-280
033-557, 033-565 Destinations or Services Exceeded RAP 2-280
033-558, 033-559 Remote ID Rejection RAP 2-281
033-560, 561, 562 TRESS/RCC RAP 2-281
033-563, 033-569 No Printable Paper Size RAP 2-282
033-564, 033-570 Power Off During Transmission RAP 2-282
033-571, 033-588 Manual Send Job Cancelled RAP 2-283
033-572 FAX Report Print Job Cancelled RAP 2-283
033-573 Domain Regulation Check Error RAP 2-284
033-580 Missing VoIP Gateway RAP 2-284
033-586 T38 Protocol Not Ready RAP 2-285
033-593 Cancelled By Remote Peer RAP 2-285
033-700 T1 Timeout Fail RAP 2-286
033-701 Retry Timeout RAP 2-286
033-710, 712, 713, 717, 718, 719, 721 Document Not Found RAP 2-287
033-716 No Specified Folder RAP 2-287
033-724 FAX Receive Memory Over Flow RAP 2-288
033-726, 728, 734, 737, 738, 751 FAX Printing Error RAP 2-288
033-733, 735, 741, 743, 744, 745, 746, 750 FAX Document Number Error RAP 2-289

RAPs 040

041-310 IM Logic Fail RAP 2-291
041-340 to 363 MCU NVM (EEPROM) Fail RAP 2-291
041-388 Logic Fail RAP 2-292
041-603, 604 Temp/Humidity Sensor Fail RAP 2-292
042-325 Device Fault RAP 2-293
042-335 Device Fault (Main FAN Fail) RAP 2-293
043-342 Sub Motor Fail RAP 2-294
042-348 Over Temperature Detect Fail RAP 2-295
042-610 Turned Slow Mode Detect Fail RAP 2-295
044-370 and 045-310 PH Comm Fail RAP 2-296
045-311 Controller Communication Fail RAP 2-296
045-370 LPH DL FAIL POWER RAP 2-297
045-371 LPH DL FAIL MULT RAP 2-297

Chain 058 - 059

058-310, 311, 315, 316, 317, 059-314, 315, 326 FUSING ERROR RAP 2-299
059-321, 324 FUSING ERROR RAP 2-300

Chain 060 - 063

060-341 to 060-357, 061-362 to 061-393 LPH Fault RAP 2-301
061-358 to 061-361 LPH Config Fail RAP 2-302
062-277, 316, 399 DADF Fail RAP 2-302
062-300 Platen Interlock Open RAP 2-303
062-311, 313, 321, 360, 371, 380, 386, 389, 393, 396-398 IIT Fail RAP 2-303
062-314, 318, 322 Software Parameter Error RAP 2-304
062-342 CCD PWBA Configuration Fail RAP 2-304
062-345 IIT EEPROM Fail RAP 2-305
062-362 X Hard Fail RAP 2-305
062-395 Trans Power Failure Detected RAP 2-306
062-790 Recognition Fail RAP 2-306
065-221 to 065-225 CIS Fail RAP 2-307

Chain 071 - 078

071-101 and 077-117 Paper Jam RAP 2-309
072-101 Jam in TRAYx RAP 2-311
072-310 and 072-311 Tray2 Fail RAP 2-313
075-100 JAM in Bypass Tray RAP 2-314
077-101 Paper Jam RAP 2-315
077-104 Exit Sensor Off Jam RAP 2-318
077-123 Registration Sensor Jam (Duplex) RAP 2-319
077-302 Device Right Side Door is Open RAP 2-320
077-314 P/H Module Logic Fail RAP 2-321
077-322 Option Comm Fail RAP 2-321
077-323 PH Motor Fail RAP 2-322
077-327 Feeder Composition Fail RAP 2-322
077-909 Paper Jam RAP 2-323

Chain 089

089-600 to 089-617 RC Fail RAP 2-325
089-623 to 089-679 LED Offset Correction Error RAP 2-326

Chain 091 to 099

091-300 Rear Cover Open RAP 2-327
091-312 HVPS CC Fail RAP 2-327
091-313, 402, 480-482, 913-929 Drum/CRUM RAP 2-328
091-400, 401, 405-436 DRUM/CRUM and Waste DRUM RAP 2-329
091-911 Waste DRUM Bottle Full RAP 2-329
092-312 to 315 ATC Sensor Fault RAP 2-330
092-916 Environment SNR Sensor Fail RAP 2-330
092-318 to 321 ADC Patch System Fail RAP 2-331
092-606 to 678 ADC Fail RAP 2-331
093-339 Toner Drum CRUM Authentication Fail RAP 2-332
093-400 to 093-425 DRUM Cartridge Near Empty RAP 2-332
093-912 to 939 and 096-918 DRUM CRUM Error RAP 2-333
094-310, 325, 326 CDC (RAD Sensor) Sensor Error RAP 2-334
094-318 1st BTR Position Fail RAP 2-334
099-396 to 099-399 Fuser Temperature Fault RAP 2-335

Chain 102 - 118

102-311 to 102-319 USB Dongle Errors RAP 2-337
102-356 EWS Soft Fail RAP 2-338
103-314 Prohibited Originals RAP 2-339
116-210, 116-211 Media Reader Error RAP 2-339
116-212 ESS Error RAP 2-340
116-314 Ethernet Address Fail RAP 2-340
116-321, 322, 328, 329, 338 Software Error RAP 2-341
116-323 ESS NVRAM W/R Check Fail RAP 2-342
116-324 and 116-328 Exception Fail RAP 2-342
116-325 ESS Fan Fail RAP 2-343
116-334 ESS NVRAM Data Compare Fail 2-343
116-342, 393, 394 ROM Version Incorrect RAP 2-344
116-343, 346, 357, 359 Main Board Error RAP 2-344
116-348, 349, 358, 360, 374 Redirecter Fail RAP 2-345
116-355 Agent Soft Fail RAP 2-345
116-363, 370, 373, 376 Fatal Error RAP 2-346
116-364, 365, 366, 368, 371, 372, 375, 377 SW Fail RAP 2-346
116-378, 379, 395 MCR/MCC Soft Fail RAP 2-347
116-381 ABL Version Fail RAP 2-348
116-382 ABL Initialize Fail RAP 2-348
116-384, 385 DCS/IDC Software Fail RAP 2-349
116-391 Illegal Code RAP 2-349
116-396 FIPS140 Self Test Fail RAP 2-350
116-397 Illegal Setting Area Coverage Threshold RAP 2-350
116-399 Initialization RAP 2-351
116-703 Postscript Language RAP 2-351
116-704 to 116-709, 716, 717 Media Reader Format RAP 2-352
116-710 HP-GL/2 Overflow RAP 2-352
116-714 HP-GL/2 Command Error RAP 2-353
116-719 XPIF Parameter Cancelled RAP 2-353
116-720 PCL Memory Low Page Simplified RAP 2-354
116-721 to 116-724, 726, 727, 728 Color Print Permissions RAP 2-354
116-738 Size/Orientation Mismatch RAP 2-355
116-739, 741, 742, 743 Out of Memory RAP 2-355
116-740 Arithmetic Error RAP 2-356
116-746 Selected Form Not Registered RAP 2-356
116-747, 116-748 Invalid Page Data RAP 2-357
116-749 PostScript Font Error RAP 2-357
116-750 Banner Sheet Cancelled RAP 2-358
116-752 Print Job Ticket RAP 2-358
116-771 to 116-780 Invalid JBIG Parameter RAP 2-359
117-310 WSD Scan S/W Fail RAP 2-359
117-312 Device Self Test Error RAP 2-360
117-313, 117-314 Geographic Region Change Fail RAP 2-360
117-315 Contract Type/Geographic Region Changed RAP 2-361
117-316 Contract Manager Software Fail RAP 2-361
117-317, 117-318 Contract Manager PPP RAP 2-362
117-319 eMMC Board Program or Font Data Access RAP 2-362
117-320 to 117-324, 327, 329, 338 eMMC Board Fail RAP 2-363
117-325, 117-326 Access Fail RAP 2-364
117-330 and 118-311 Soft Fail RAP 2-364
117-332, 117-335 Uninitialized or Invalid NVM RAP 2-365
117-333, 348, 364 Uninitialized or Used eMMC RAP 2-365
117-343 Log Sending Parameter Fail RAP 2-366
117-344 Invalid User Job Type Fail RAP 2-366
117-345 SSMM Batch Setting Duration Fail RAP 2-367
117-354, 356, 358 Job Limit System Fail RAP 2-367
117-357 TPM Fail RAP 2-368
117-360 Date Limit Exceeding Fail RAP 2-368
117-362, 117-363 USB Dongle Fail RAP 2-369
117-365 WiFi Long Diag Fail RAP 2-369
118-310 IPSEC Internal Fail RAP 2-370

Chain 121

121-316 Accessory Conflict RAP 2-371
121-318 Auth/Account Settings Not Supported RAP 2-371
123-310 to 123-399 UI Error RAP 2-372
124-310-314, 316, 318, 322, 324, 340, 356, 357, 360 ID/Billing/Data Mismatch RAP 2-373
124-315, 317, 355 DC132 Error 02, 04 and 14 RAP 2-374
124-319 DC132 Error 08 RAP 2-374
124-320 SEEPROM Fail RAP 2-375
124-321 Backup SRAM Fail RAP 2-375
124-323 DC132 06 RAP 2-376
124-325 Billing Restoration Fail RAP 2-376
124-326 IOT Speed Not Registered RAP 2-377
124-327 IOT Speed Change Fail RAP 2-377
124-334 to 124-335 ESS ROM DIMM RAP 2-378
124-337 ESS Standard RAM Error RAP 2-378
124-341, 351, 361, 381, 391 CRUM Market Fail MCU RAP 2-379
124-342, 343, 352, 362, 363, 382, 383, 392, 393 CRUM Fail SYS RAP 2-379
124-344, 346, 348 Billing Meter Mismatch RAP 2-380
124-345 Billing Meter Type Restoration Fail RAP 2-380
124-347 Billing CountType Restoration Fail RAP 2-381
124-349 Modal Break Points Restoration Fail RAP 2-381
124-350, 354, 380, 390 CRUM OEM Fail All RAP 2-382
124-359 IOT NVM Backup Restor Fail 1 RAP 2-382
124-372, 373, 374 IOT Soft Fail RAP 2-383
127-310 ESS Task Fatal Error RAP 2-383
125-311 and 127-314, 315, 342 PSW Controller Unexpected Fail RAP 2-384
127-353 to 127-399 Fatal Error RAP 2-385

Chain 133

133-210 to 133-701 FAX Parameter Incorrect RAP 2-387
133-701 Replacement Character Detected RAP 2-388
133-710 Tray Select Fail RAP 2-388

Chain 500

500-030 dC612 Print NG IOT Wait State RAP 2-389
500-033, 500-035 Diag Documents RAP 2-389
500-990 dC612 Print NG By Any Reason RAP 2-390

OF-FIP

2.6 Log RAP 2-391

OF-6B POST Fault Codes (LED) Complete RAP 2-392
OF-07 Fax System Fail 2-393
OF-11 Fax Job Fail 2-393
OF-16 Fax Hardware Check Item Fail 2-394
FIP 2.4 NET System Fault Check RAP 2-394

Troubleshooting Overview

To increase the efficiency of troubleshooting, ensure that preliminary checks should be made to confirm the trouble status before proceeding to the Repair Adjustment Procedure (RAP) (Chapter 2), Diagnostic Procedures (Chapter 6), Wiring Diagrams (Chapter 7), and Principles of Operation (Chapter 8).

Flow of Troubleshooting

Flow of the troubleshooting is as follows:

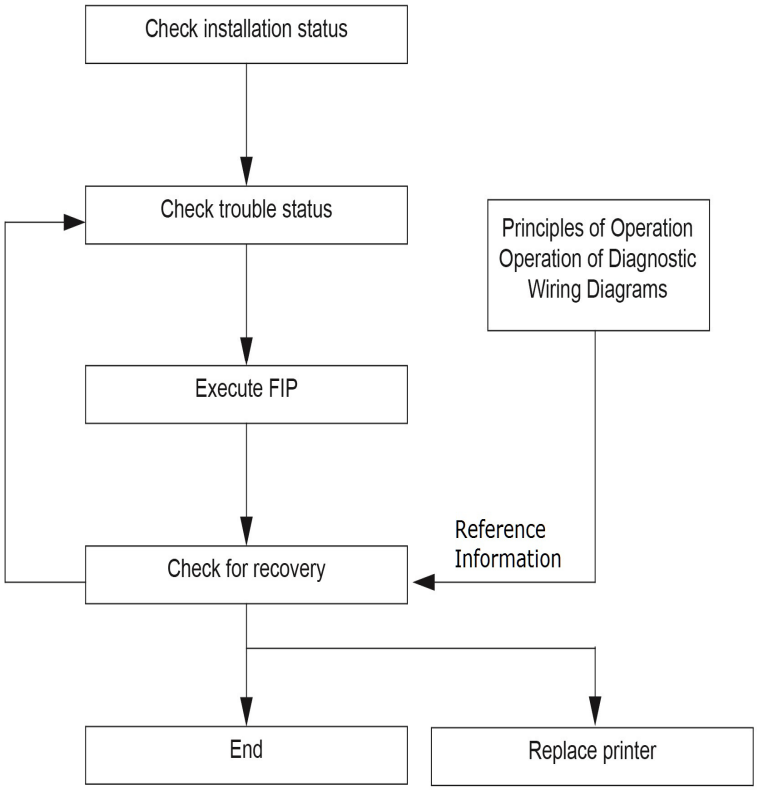

Figure 1

Check Installation Status

Be sure to check the following items before starting the troubleshooting procedures.

1. The power supply voltage is within the specifications (measure the voltage at the wall outlet).
2. Power cord is free from breakage, short-circuit, disconnected wire, or incorrect connection in the power cord.
3. The printer is properly grounded.
4. The printer is not installed at a place subjected to high/low temperature, humidity, and sudden temperature changes.
5. The printer is not installed at or near water facilities, humidifier, heating appliance, fire, dust, or in airflow from air conditioner.
6. The printer is not installed in a place subjected to volatile or inflammable gas.
7. The printer is not installed under direct sunlight.
8. The printer is installed in a well-ventilated place.
9. The printer is installed on a firm and stable surface.
10. The paper meets the specifications (standard paper is recommended).
11. The printer is handled properly.

Cautions on Service Operations

WARNING

While the printer is on, never touch live parts if not required. Power is supplied to the inlet and LVPS even while the printer is off. Never touch its live components. Do not touch live parts unless otherwise specified.

1. Be sure to remove the power cord unless otherwise required.

WARNING

When outputting a high voltage using the Diag Tool, etc., ensure that: - The high voltage carrying parts must never be touched. - The instructions in this manual must be followed.

1. When outputting a high voltage using the Diag Tool, etc., keep all the covers on unless otherwise required.
2. When operating the motor using the Diag Tool, etc., keep all the covers on unless otherwise required.

WARNING

When operating the drive unit using the Diag Tool, etc., ensure that: - The drive unit must never be touched. - The instructions in this manual must be followed.

1. When touching hot parts, be careful not to get burnt.
2. While working, be sure to wear a wrist band or the like to dissipate static charges from your body.

WARNING

Check the provided parts individually. Do not remove, replace, or check any parts other than the provided parts. Never break down the provided parts or replace the parts therein. Mounting of any parts other than the provided parts is not guaranteed in quality or safety, and is strictly forbidden.

Cautions on Using FIP

1. Check the provided parts individually. Do not remove, replace, or check any parts other than the provided parts. Never break down the provided parts or replace the parts therein. Mounting of any parts other than the provided parts is not guaranteed in quality or safety, and is strictly forbidden.
2. In the initial check according to the FIP, check only items which can be simply checked.
3. In the initial check according to the FIP, check the constitutive parts of the major check parts and related parts, as well as major check parts.
4. When working with the printer, be sure to remove the power cord unless otherwise required. Never touch live parts if not required, while the power cord is connected.
5. Connector condition is denoted as follows: Connector (P12) is connected Plug side with the connector (P/J12) removed (except when attached directly to the board). (J12) Jack side with the connector (P/J12) removed (except when attached directly to the board).
6. (P/J1-2PIN <=> P/J3-4PIN) in the FIP means measurement with the positive side of the measuring instrument connected to (P/J1-2PIN) and the negative side of (P/J3-4PIN).
7. (P/J1<=> J2) in the FIP means measurement for all terminals corresponding between (P/J1 and P/J2) based on “Wiring Diagrams”.
8. In (P/J1-2PIN <=> P/J3-4PIN) in the FIP where voltage is measured, (P/J3-4PIN) on the rear negative side is always at the AG (analog ground), SG (signal ground), or RTN (return). Therefore, after checking of proper conductivity between AGs, SGs, or RTNs respectively, the rear negative side can be connected to the PIN of AG, SG or RTN instead of (P/J3-4PIN). However, care should be taken not to confuse [AG], [SG], and (RTN) because they are not on the same level.
9. When measuring the voltage at small connectors, use the dedicated tool. Handle the tool with care because its business end is pointed.
10. When measuring the voltage, set the toner cartridge and sheet feeder, close the COVERs and power ON unless otherwise required.
11. Numerical values in the FIP are only for guideline. Approximate values are acceptable.
12. In each step of the FIP, parts removal and other procedures implicitly required for the step are omitted.
13. In the FIP, “Replacement” means the replacement of the parts that are considered to be the cause of the trouble. Replacement of those parts means the replacement of the assembly part (HIGH ASSY) that contain them.
14. Some of the instructions in the FIP are branched off depending on the specifications. Follow the applicable instruction.

Items To Be Confirmed Before Going To FIP Troubleshooting

Basic Printer Problems

Some printer problems can be easy to resolve. If a problem occurs with your printer, check each the following:

1. If a message is displayed on the UI of operator panel, see “2.2 Error Code List”.
2. The printer power cable is plugged into the printer and a properly grounded electrical outlet.
3. The printer power is powered ON.
4. The electrical outlet is not turned off by any switch or breaker.
5. Other electrical equipment plugged into the outlet is working.
6. All options are properly installed.
7. If you have checked all of the above and still have a problem, turn off the printer, wait for 10 seconds, and then turn on the printer again. This often solves the problem.

Display Problems

1. If the operator panel displays only diamonds or is blank, check and try the action below.

   a) Turn off the printer, wait for 10 seconds, and turn on the printer.

   b) Self Test Message appears on the operator panel. When the test is completed, “Ready to Print” is displayed.
2. If menu settings changed from the operator panel have no effect, check and try the actions below. Settings in the software program, the printer driver, or the printer utilities are overriding the settings made on the operator panel.

   a) Change the menu settings from the printer driver, the printer utilities, or the software program instead of the operator panel.

   b) Disable the settings in the printer driver, the printer utilities, or the software program so you can change settings on the operator panel.

Printing Problems

1. If a job did not print correct or incorrect characters were printed, check and try the actions below.

   a) Make sure “Ready to Print” appears on the operator panel before sending a job to print. Press Menu to return to “Ready to Print”.

   b) Make sure print media is loaded in the printer. Press Menu to return to “Ready to Print”.

   c) Verify that you are using the correct printer driver.

   d) Make sure you are using the correct Ethernet or USB cables and it securely connected at the back of the printer.

   e) Verify that the correct print media size is selected.

   f) If using a print spooler, verify that the spooler has not stalled.

   g) Check the printer interface from the “Configure” menu. Determine the host interface you are using. Print a Panel Setting page to verify that the current interfaces settings are correct.

   h) Output fonts will not print correctly using the PCL driver in its default mode. To correct this problem, use PS driver when using the PCL driver.
2. If print media misfeeds or multiple feeds occur, check and try the actions below.

   a) Make sure the print media you are using meets the specifications for your printer.

   b) Flex print media before loading it in any of the sources.

   c) Make sure the print media is loaded correctly.

   d) Make sure the width and length guides on the print media sources are adjusted correctly.

   e) If the print media are overfilled in sources, reduce the amount of media.

   f) Load the recommended print side correctly for the type of print media you are using.

   g) Turn the print media over or around and try printing again to see if feeding improves.

h) Check the print media type loaded in the source, and refill only one type of print media, if print media types are mixed.

i) Refill a new ream of print media, if some reams are mixed.

j) Remove the top and bottom sheets of a ream before loading the print media.

k) Do not reload print media until the print media source is empty.

3. If envelope misfeeds or multiple feeds occur, check and try the action below.

   a) Remove the stack of envelopes from the bypass tray.

4. If page breaks in unexpected places, check and try the action below.

   a) Check the “Job Time-out” in the Basic Settings menu and increase the value.

5. When a job is executed with a wrong paper tray or a wrong print media, check and try the action below.

   a) Check the “Paper Size” and “Paper Type” in the Tray Settings menu on the printer operator panel and in the printer driver.

6. If print media does not stack neatly in the output tray, check and try the action below.

   a) Turn the print media stack over in the tray or multipurpose feeder.

FIP

The FIP is the first step for trouble diagnosis. The FIP isolates the presence of various troubles including error codes, and guides the troubleshooting procedure.

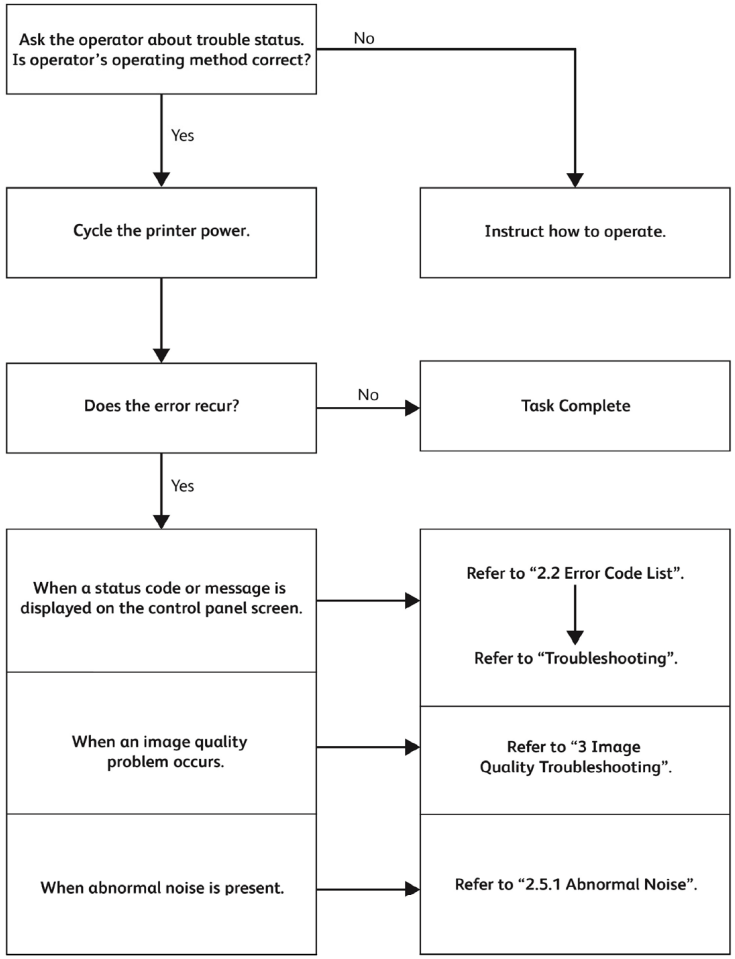

Figure 2

NOTE: *Wait at least 3 seconds after turning the power off before turning the power on again. Turning the power on again soon after turning the power off will not turn the power off.*

1DC +5VDC Power Fault RAP

Possible Parts Affected

LVPS Board PL 18.1 Item 16(MFP), PL 18.5 Item 16(SFP)

MCU Board, PL 18.1 Item 1(MFP), PL 18.5 Item 1(SFP)

WARNING

Ensure that the electricity to the machine is switched off while performing tasks that do not need electricity. Refer to GP 4. Disconnect the power cord. Electricity can cause death or injury. Moving parts can cause injury.

1. Check the voltage between the MCU Board ground and the P/J540-7 pin is about +5 VDC.
   a. Check the connection at the LVPS Board and the MCU Board P/J284 and P/J280 are fully seated.
   b. Check the continuity between the LVPS Board and the MCU Board verify each cable of P/J284<=>P/J280.
   c. Check the voltage from the LVPS Board (+5 VDC). Voltage between the LVPS Board ground and the P/J284-5 pin should be about +5 VDC.
      i. Check the connections at LVPS Board and the MCU Board, P/J284 and P/J280 are fully seated.
      ii. Check continuity between the LVPS Board and the MCU Board verify each cable of P/J284<=>P/J280 is continuous.
         - Install a new LV MCU HARNESS ASSY, PL 18.4 Item 5 (MFP), PL 18.8 Item 5 (SFP).
      iii. Check the voltage from the LVPS Board ground and the P/J284-5 pin is about +5 VDC.
   d. If the fault persists, install new components as necessary,
      - MCU Board, REP 18.1.1 (MFP), REP 18.5.1 (SFP)
      - LVPS Board, REP 18.1.16 (MFP), REP 18.5.16 (SFP)

1AC +24VDC Power Fault RAP

Possible Parts Affected

LVPS Board PL 18.1 Item 16(MFP), PL 18.5 Item 16(SFP)

MCU Board, PL 18.1 Item 1(MFP), PL 18.5 Item 1(SFP)

Procedure

WARNING

Ensure that the electricity to the machine is switched off while performing tasks that do not need electricity. Refer to GP 4. Disconnect the power cord. Electricity can cause death or injury. Moving parts can cause injury.

WARNING

Take care when measuring AC mains (line) voltage. Electricity can cause death or injury.

1. Check the connections at the LVPS Board and the MCU Board, verify P/J284 and P/J280 are fully seated.
2. Check continuity between the LVPS Board and the MCU Board verify each cable of P/J284<=>P/J280 is continuous.
   - Install a new or repair the LV MCU HARNESS ASSY, PL 18.4 Item 5(MFP), PL 18.8 Item 5(SFP).
3. Close all interlock switches and verify the voltage from the LVPS Board ground and the P/J284-18 pin and the voltage from the LVPS Board ground and the P/J284-20 pin is about +24 VDC.
4. If the fault persists, install new components as necessary,
   - MCU Board, REP 18.1.1(MFP), REP 18.5.1(SFP)
   - LVPS Board, REP 18.1.16(MFP), REP 18.5.16 (SFP)

002-500 UI Error RAP

002-500 CUI scan panel UI detection error.

Procedure

WARNING

Ensure that the electricity to the machine is switched off while performing tasks that do not need electricity. Refer to GP 4. Disconnect the power cord. Electricity can cause death or injury. Moving parts can cause injury.

Perform the steps that follow:

1. Switch off then switch on the machine, GP 4.
2. Ensure that all connectors on the UI assembly, PL 1.1 Item 1 and the ESS Board, PL 18.1 Item 5 (MFP), PL 18.5 Item 5 (SFP) are securely connected. Ensure that all surface mounted modules on the ESS Board are securely connected.
3. Check the wiring between the ESS Board and the UI assembly.
4. Reload the software, GP 9.
5. If the fault persists, install a new components as necessary:
   - UI assembly, REP 1.1.1.
   - ESS Board, REP 18.1.5 (MFP), REP 18.5.5 (SFP).

003-311 IIT CDI I/F Mismatch

003-311 During controller initialization, the IIT CDI I/F has insufficient information from the IIT.

Procedure

Perform the steps that follow:

1. Obtain the log file using the log tool. Perform 2.6 Log RAP
   - If there was a reboot after the error had occurred and hence was unable to obtain the log, set NVM (700-530) to “0” to perform log collection and return the NVM (700-530) to “1” after completing the procedure.
2. Change any possible mechanical settings for corrective actions or detection conditions and repeat the operation.
3. Check the version of Controller ROM. If it is not the latest, download and update to the latest software revision. (Refer to GP 9 Firmware Version Upgrade)
4. Switch the power off then on.Get the procedures for reproducing an error according to the operation that was performed when the error occurred.
   a. Check the exact occurrence timing during job execution.
   b. Check the job settings from the Panel.
   c. Collect other information as much as possible to reproduce the error.
5. Obtain logs immediately after the error has occurred without turning the power off and on. Perform 2.6 Log RAP.
6. The ESS Board rarely fails, contact Technical Support for further instructions.

003-318, 003-319 IIT Software Fail

003-318 IIT software is corrupt.

003-319 Video driver detection fail.

Procedure

WARNING

Ensure that the electricity to the machine is switched off while performing tasks that do not need electricity. Refer to GP 4. Disconnect the power cord. Electricity can cause death or injury. Moving parts can cause injury.

Perform the steps that follow:

1. Switch off then switch on the machine, GP 4.
2. Ensure that all connectors on the MCU Board, PL 18.1 Item 1 (MFP), PL 18.1 Item 5 (SFP) and the ESS Board, PL 18.1 Item 5 (MFP), PL 18.5 Item 5 (SFP) are securely connected. Make sure all surface mounted modules on both Boards are securely connected.
3. Reload the software, GP 9.
4. If the fault persists, install a new ESS Board, REP 18.1.5 (MFP), REP 18.5.5 (SFP).

003-320 to 003-343 IISS-ESS Communication Fail

003-320 IISS sending error 1 detected by the controller. An abnormal parameter is set as the argument for the send function.

003-321 IISS sending error 2 detected by the controller. After commands were sent twice from the controller, the controller could not receive acknowledgment from the IISS.

003-322 IISS sending error 3 detected by the controller. After commands were sent twice from the controller, the controller could not receive acknowledgment from the IISS.

003-323 IISS sending error 4 detected by the controller. After commands were sent twice from the controller, the controller could not receive acknowledgment from the IISS.

003-324 IISS sending error 5 detected by the controller. After commands were sent twice from the controller, the controller could not receive acknowledgment from the IISS.

003-325 IISS sending error 6 detected by the controller. After commands were sent twice from the controller, the controller could not receive acknowledgment from the IISS.

003-326 IISS sending error 7 detected by the controller. After commands were sent twice from the controller, the controller could not receive acknowledgment from the IISS.

003-327 IISS sending error 8 detected by the controller. After commands were sent twice from the controller, the controller could not receive acknowledgment from the IISS.

003-328 IISS sending error 9 detected by the controller. After commands were sent twice from the controller, the controller could not receive acknowledgment from the IISS.

003-329 IISS receiving error 10 detected by the controller. The NAK that notifies of the occurrence of a transmission failure is received.

003-330 IISS receiving error 11 detected by the controller. The NAK that notifies of the occurrence of a transmission failure is received.

003-331 IISS receiving error 12 detected by the controller. The NAK that notifies of the occurrence of a transmission failure is received.

003-332 IISS receiving error 13 detected by the controller. The NAK that notifies of the occurrence of a transmission failure is received.

003-333 IISS receiving error 14 detected by the controller. The NAK that notifies of the occurrence of a transmission failure is received.

003-334 IISS receiving error 15 detected by the controller. The NAK that notifies of the occurrence of a transmission failure is received.

003-335 IISS receiving error 16 detected by the controller. The NAK that notifies of the occurrence of a transmission failure is received.

003-336 IISS receiving error 17 detected by the controller. The NAK that notifies of the occurrence of a transmission failure is received.

003-337 IISS receiving error 18 detected by the controller. There was no response to the power on command sent to the IISS after restoring from power saver mode.

003-338 IISS receiving error 19 detected by the controller. Incorrect argument error for sending.

003-339 IISS receiving error 20 detected by the controller. Transmission establishing error for sending.

003-340 IISS receiving error 21 detected by the controller. Synchronous send error.

003-341 IISS receiving error 22 detected by the controller. Transmission error for sending.

003-342 IISS receiving error 23 detected by the controller. Incorrect argument error for receiving.

003-343 IISS receiving error 24 detected by the controller. Synchronous receive error.

Procedure

WARNING

Ensure that the electricity to the machine is switched off while performing tasks that do not need electricity. Refer to GP 4. Disconnect the power cord. Electricity can cause death or injury. Moving parts can cause injury.

Perform the steps that follow:

1. Switch off then switch on the machine, GP 4.
2. Ensure that all connectors on the MCU Board, PL 18.1 Item 1 (MFP), PL 18.1 Item 5 (SFP) and the ESS Board are securely connected. Make sure all surface mounted modules on both Boards are securely connected.
3. Reload the software, GP 9.
4. If the fault persists, install a new ESS Board, REP 18.1.5 (MFP), REP 18.5.5 (SFP).

003-344 IISS-ESS X Hotline Fail

003-344 X Hotline failure during power on.

Procedure

WARNING

Ensure that the electricity to the machine is switched off while performing tasks that do not need electricity. Refer to GP 4. Disconnect the power cord. Electricity can cause death or injury. Moving parts can cause injury.

Perform the steps that follow:

1. Switch off then switch on the machine, GP 4.
2. Ensure that all connectors on the MCU Board, PL 18.1 Item 1(MFP), PL 18.1 Item 5 (SFP) and the ESS Board are securely connected. Make sure all surface mounted modules on both Boards are securely connected.
3. Reload the software, GP 4.
4. If the fault persists, install a new ESS Board, REP 18.1.5(MFP), REP 18.5.5(SFP).

003-345, 003-346 X PIO Mismatch RAP

003-345 X PIO Unmatch Fail 1 When a job fail was received from the IISS, an error of the X hot line was detected.

003-345 X PIO Unmatch Fail 2 When IIT image delivered was received from the IISS, an error of the X hot line was detected.

Procedure

WARNING

Ensure that the electricity to the machine is switched off while performing tasks that do not need electricity. Refer to GP 4. Disconnect the power cord. Electricity can cause death or injury. Moving parts can cause injury.

Perform the steps that follow:

1. Switch off then switch on the machine, GP 4.
2. Ensure that all connectors on the MCU Board, PL 18.1 Item 1 (MFP), PL 18.1 Item 5 (SFP), and the ESS Board, PL 18.5 Item 1 (MFP) PL 18.5 Item 5 (SFP) are securely connected. Make sure all surface mounted modules on both Boards are securely connected.
3. Reload the software, GP 4.
4. If the fault persists, install a new ESS Board, REP 18.5.1 (MFP), REP 18.5.5 (SFP).

003-700 Returned Documents Error RAP

003-700 When the originals are ejected, the number of ejected originals is more than the number that were fed.

Procedure

Reload the originals, then re-run the job.

003-701 Duplication Prevention Code RAP

003-701 A copy restriction code is detected in the document data.

Procedure

Perform the steps that follow:

1. Advise the customer not to attempt to copy documents that are restricted.
2. Obtain the log file using the log tool. Perform 2.6 Log RAP
   - If there was a reboot after the error had occurred and hence was unable to obtain the log, set NVM (700-530) to “0” to perform log collection and return the NVM (700-530) to “1” after completing the procedure.
3. Change any possible mechanical settings for corrective actions or detection conditions and repeat the operation.
4. Check the version of Controller ROM. If it is not the latest, download and update to the latest software revision. (Refer to GP 9 Firmware Version Upgrade)
5. Switch the power off then on.Get the procedures for reproducing an error according to the operation that was performed when the error occurred.
   a. Check the exact occurrence timing during job execution.
   b. Check the job settings from the Panel.
   c. Collect other information as much as possible to reproduce the error.
6. Obtain logs immediately after the error has occurred without turning the power off and on. Perform 2.6 Log RAP.
7. The ESS Board rarely fails, contact Technical Support for further instructions.

003-702 Different Magnification RAP

003-702 Different magnification settings, for side 1 and side 2 of a document.

Procedure

Perform the steps that follow:

1. Advise the customer to correct the magnification settings.
2. Obtain the log file using the log tool. Perform 2.6 Log RAP
   - If there was a reboot after the error had occurred and hence was unable to obtain the log, set NVM (700-530) to “0” to perform log collection and return the NVM (700-530) to “1” after completing the procedure.
3. Change any possible mechanical settings for corrective actions or detection conditions and repeat the operation.
4. Check the version of Controller ROM. If it is not the latest, download and update to the latest software revision. (Refer to GP 9 Firmware Version Upgrade)
5. Switch the power off then on.Get the procedures for reproducing an error according to the operation that was performed when the error occurred.
   a. Check the exact occurrence timing during job execution.
   b. Check the job settings from the Panel.
   c. Collect other information as much as possible to reproduce the error.
6. Obtain logs immediately after the error has occurred without turning the power off and on. Perform 2.6 Log RAP.
7. The ESS Board rarely fails, contact Technical Support for further instructions.

003-703, 003-704 Color Correction RAP

003-703 Color correction patch position error during 2 sided simultaneous scan.

003-704 Color correction color difference error during 2 sided simultaneous scan.

Procedure

Perform the steps that follow:

1. Advise the customer to load the 2 sided simultaneous scan correction chart correctly.
2. Obtain the log file using the log tool. Perform 2.6 Log RAP
   - If there was a reboot after the error had occurred and hence was unable to obtain the log, set NVM (700-530) to “0” to perform log collection and return the NVM (700-530) to “1” after completing the procedure.
3. Change any possible mechanical settings for corrective actions or detection conditions and repeat the operation.
4. Check the version of Controller ROM. If it is not the latest, download and update to the latest software revision. (Refer to GP 9 Firmware Version Upgrade)
5. Switch the power off then on.Get the procedures for reproducing an error according to the operation that was performed when the error occurred.
   a. Check the exact occurrence timing during job execution.
   b. Check the job settings from the Panel.
   c. Collect other information as much as possible to reproduce the error.
6. Obtain logs immediately after the error has occurred without turning the power off and on. Perform 2.6 Log RAP.
7. The ESS Board rarely fails, contact Technical Support for further instructions.

003-705 Energy Saving Paper Size Mismatch RAP

003-705 A paper size mismatch error was detected when exiting energy saver mode.

Procedure

Perform the steps that follow:

1. Advise the customer to cancel the job, then retry the job.
2. Obtain the log file using the log tool. Perform 2.6 Log RAP
   - If there was a reboot after the error had occurred and hence was unable to obtain the log, set NVM (700-530) to “0” to perform log collection and return the NVM (700-530) to “1” after completing the procedure.
3. Change any possible mechanical settings for corrective actions or detection conditions and repeat the operation.
4. Check the version of Controller ROM. If it is not the latest, download and update to the latest software revision. (Refer to GP 9 Firmware Version Upgrade)
5. Switch the power off then on.Get the procedures for reproducing an error according to the operation that was performed when the error occurred.
   a. Check the exact occurrence timing during job execution.
   b. Check the job settings from the Panel.
   c. Collect other information as much as possible to reproduce the error.
6. Obtain logs immediately after the error has occurred without turning the power off and on. Perform 2.6 Log RAP.
7. The ESS Board rarely fails, contact Technical Support for further instructions.

003-750 Insufficient Documents Duplex Book RAP

003-750 The number of documents is insufficient for duplex book print.

Procedure

Perform the steps that follow:

1. Advise the customer to change the parameters, then retry the job.
2. Obtain the log file using the log tool. Perform 2.6 Log RAP
   - If there was a reboot after the error had occurred and hence was unable to obtain the log, set NVM (700-530) to “0” to perform log collection and return the NVM (700-530) to “1” after completing the procedure.
3. Change any possible mechanical settings for corrective actions or detection conditions and repeat the operation.
4. Check the version of Controller ROM. If it is not the latest, download and update to the latest software revision. (Refer to GP 9 Firmware Version Upgrade)
5. Switch the power off then on.Get the procedures for reproducing an error according to the operation that was performed when the error occurred.
   a. Check the exact occurrence timing during job execution.
   b. Check the job settings from the Panel.
   c. Collect other information as much as possible to reproduce the error.
6. Obtain logs immediately after the error has occurred without turning the power off and on. Perform 2.6 Log RAP.
7. The ESS Board rarely fails, contact Technical Support for further instructions.

003-751 Capacity RAP

003-751 According to the document area settings and the scan area, processing image data with a size smaller than the one that can be processed was detected.

Procedure

Perform the steps that follow:

1. Advise the customer to increase the resolution or enlarge the scan area (width x length), then retry the job.
2. Obtain the log file using the log tool. Perform 2.6 Log RAP
   - If there was a reboot after the error had occurred and hence was unable to obtain the log, set NVM (700-530) to “0” to perform log collection and return the NVM (700-530) to “1” after completing the procedure.
3. Change any possible mechanical settings for corrective actions or detection conditions and repeat the operation.
4. Check the version of Controller ROM. If it is not the latest, download and update to the latest software revision. (Refer to GP 9 Firmware Version Upgrade)
5. Switch the power off then on.Get the procedures for reproducing an error according to the operation that was performed when the error occurred.
   a. Check the exact occurrence timing during job execution.
   b. Check the job settings from the Panel.
   c. Collect other information as much as possible to reproduce the error.
6. Obtain logs immediately after the error has occurred without turning the power off and on. Perform 2.6 Log RAP.
7. The ESS Board rarely fails, contact Technical Support for further instructions.

003-752, 932, 935 600dpi Cannot be Scanned RAP

003-752 600dpi is unavailable for DADF mixed 2-sided mode scan.

003-932 For scanning in the DADF mix duplex mode, 600dpi is not available.

003-935 For scanning in the DADF mix duplex mode, 600dpi is not available (when the next document exists).

Procedure

Perform the steps that follow:

1. Advise the customer to perform scanning below 400 dpi resolution.
2. Obtain the log file using the log tool. Perform 2.6 Log RAP
   - If there was a reboot after the error had occurred and hence was unable to obtain the log, set NVM (700-530) to “0” to perform log collection and return the NVM (700-530) to “1” after completing the procedure.
3. Change any possible mechanical settings for corrective actions or detection conditions and repeat the operation.
4. Check the version of Controller ROM. If it is not the latest, download and update to the latest software revision. (Refer to GP 9 Firmware Version Upgrade)
5. Switch the power off then on.Get the procedures for reproducing an error according to the operation that was performed when the error occurred.
   a. Check the exact occurrence timing during job execution.
   b. Check the job settings from the Panel.
   c. Collect other information as much as possible to reproduce the error.
6. Obtain logs immediately after the error has occurred without turning the power off and on. Perform 2.6 Log RAP.
7. The ESS Board rarely fails, contact Technical Support for further instructions.

003-753, 913, 930, 933 300dpi Cannot be Scanned RAP

003-753 300/400/600dpi unavailable for DADF mixed 2-sided mode scan.

003-913, 930 For scanning in the DADF mix duplex mode, 300dpi, 400dpi and 600dpi are not available.

003-933 For scanning in the DADF mix duplex mode, 300dpi, 400dpi and 600dpi are not available (when the next document exists).

Procedure

Perform the steps that follow:

1. Advise the customer to perform scanning below 200 dpi resolution or perform scanning in other than mixed mode.
2. Obtain the log file using the log tool. Perform 2.6 Log RAP
   - If there was a reboot after the error had occurred and hence was unable to obtain the log, set NVM (700-530) to “0” to perform log collection and return the NVM (700-530) to “1” after completing the procedure.
3. Change any possible mechanical settings for corrective actions or detection conditions and repeat the operation.
4. Check the version of Controller ROM. If it is not the latest, download and update to the latest software revision. (Refer to GP 9 Firmware Version Upgrade)
5. Switch the power off then on.Get the procedures for reproducing an error according to the operation that was performed when the error occurred.
   a. Check the exact occurrence timing during job execution.
   b. Check the job settings from the Panel.
   c. Collect other information as much as possible to reproduce the error.
6. Obtain logs immediately after the error has occurred without turning the power off and on. Perform 2.6 Log RAP.
7. The ESS Board rarely fails, contact Technical Support for further instructions.

003-754, 756 S2X Error RAP

003-754 A recoverable error was detected.

003-756 All scanned documents were detected as blank.

Procedure

Perform the steps that follow:

1. Advise the customer to cancel the job, then retry the job.
2. Obtain the log file using the log tool. Perform 2.6 Log RAP
   - If there was a reboot after the error had occurred and hence was unable to obtain the log, set NVM (700-530) to “0” to perform log collection and return the NVM (700-530) to “1” after completing the procedure.
3. Change any possible mechanical settings for corrective actions or detection conditions and repeat the operation.
4. Check the version of Controller ROM. If it is not the latest, download and update to the latest software revision. (Refer to GP 9 Firmware Version Upgrade)
5. Switch the power off then on.Get the procedures for reproducing an error according to the operation that was performed when the error occurred.
   a. Check the exact occurrence timing during job execution.
   b. Check the job settings from the Panel.
   c. Collect other information as much as possible to reproduce the error.
6. Obtain logs immediately after the error has occurred without turning the power off and on. Perform 2.6 Log RAP.
7. The ESS Board rarely fails, contact Technical Support for further instructions.

003-757, 931, 934 400dpi Cannot be Scanned RAP

003-757 400/600dpi unavailable for DADF mixed 2-sided mode scan.

003-931 For scanning in the DADF mix duplex mode, 400dpi and 600dpi are not available.

003-934 For scanning in the DADF mix duplex mode, 400dpi and 600dpi are not available (when the next document exists).

Procedure

Perform the steps that follow:

1. Advise the customer to perform scanning below 300 dpi resolution or perform scanning in other than mixed mode.
2. Obtain the log file using the log tool. Perform 2.6 Log RAP
   - If there was a reboot after the error had occurred and hence was unable to obtain the log, set NVM (700-530) to “0” to perform log collection and return the NVM (700-530) to “1” after completing the procedure.
3. Change any possible mechanical settings for corrective actions or detection conditions and repeat the operation.
4. Check the version of Controller ROM. If it is not the latest, download and update to the latest software revision. (Refer to GP 9 Firmware Version Upgrade)
5. Switch the power off then on.Get the procedures for reproducing an error according to the operation that was performed when the error occurred.
   a. Check the exact occurrence timing during job execution.
   b. Check the job settings from the Panel.
   c. Collect other information as much as possible to reproduce the error.
6. Obtain logs immediately after the error has occurred without turning the power off and on. Perform 2.6 Log RAP.
7. The ESS Board rarely fails, contact Technical Support for further instructions.

003-760, 003-761 Scan Settings Error RAP

003-760 The job properties are incorrect.

003-761 Tray selection error.

Procedure

Perform the steps that follow:

1. Advise the customer to correct the job properties.
2. Obtain the log file using the log tool. Perform 2.6 Log RAP
   - If there was a reboot after the error had occurred and hence was unable to obtain the log, set NVM (700-530) to “0” to perform log collection and return the NVM (700-530) to “1” after completing the procedure.
3. Change any possible mechanical settings for corrective actions or detection conditions and repeat the operation.
4. Check the version of Controller ROM. If it is not the latest, download and update to the latest software revision. (Refer to GP 9 Firmware Version Upgrade)
5. Switch the power off then on.Get the procedures for reproducing an error according to the operation that was performed when the error occurred.
   a. Check the exact occurrence timing during job execution.
   b. Check the job settings from the Panel.
   c. Collect other information as much as possible to reproduce the error.
6. Obtain logs immediately after the error has occurred without turning the power off and on. Perform 2.6 Log RAP.
7. The ESS Board rarely fails, contact Technical Support for further instructions.

003-763 Adjustment Chart Not Found RAP

003-763 The chart patch could not be detected.

Procedure

Perform the steps that follow:

1. Advise the customer to place the Auto Gradation Correction Chart correctly.
2. Obtain the log file using the log tool. Perform 2.6 Log RAP
   - If there was a reboot after the error had occurred and hence was unable to obtain the log, set NVM (700-530) to “0” to perform log collection and return the NVM (700-530) to “1” after completing the procedure.
3. Change any possible mechanical settings for corrective actions or detection conditions and repeat the operation.
4. Check the version of Controller ROM. If it is not the latest, download and update to the latest software revision. (Refer to GP 9 Firmware Version Upgrade)
5. Switch the power off then on.Get the procedures for reproducing an error according to the operation that was performed when the error occurred.
   a. Check the exact occurrence timing during job execution.
   b. Check the job settings from the Panel.
   c. Collect other information as much as possible to reproduce the error.
6. Obtain logs immediately after the error has occurred without turning the power off and on. Perform 2.6 Log RAP.
7. The ESS Board rarely fails, contact Technical Support for further instructions.

003-764 Document Insufficient (image overlay) RAP

003-764 During Image Overlay, only 1 page can be stored (B/W Macines Only).

Procedure

Perform the steps that follow:

1. Advise the customer to cancel the job.
2. Obtain the log file using the log tool. Perform 2.6 Log RAP
   - If there was a reboot after the error had occurred and hence was unable to obtain the log, set NVM (700-530) to “0” to perform log collection and return the NVM (700-530) to “1” after completing the procedure.
3. Change any possible mechanical settings for corrective actions or detection conditions and repeat the operation.
4. Check the version of Controller ROM. If it is not the latest, download and update to the latest software revision. (Refer to GP 9 Firmware Version Upgrade)
5. Switch the power off then on.Get the procedures for reproducing an error according to the operation that was performed when the error occurred.
   a. Check the exact occurrence timing during job execution.
   b. Check the job settings from the Panel.
   c. Collect other information as much as possible to reproduce the error.
6. Obtain logs immediately after the error has occurred without turning the power off and on. Perform 2.6 Log RAP.
7. The ESS Board rarely fails, contact Technical Support for further instructions.

003-780 Scan Image Compression Error RAP

003-780 Scan compression error.

Procedure

Perform the steps that follow:

1. Advise the customer to cancel the job then to change the scan resolution parameter and then retry the job.
2. Obtain the log file using the log tool. Perform 2.6 Log RAP
   - If there was a reboot after the error had occurred and hence was unable to obtain the log, set NVM (700-530) to “0” to perform log collection and return the NVM (700-530) to “1” after completing the procedure.
3. Change any possible mechanical settings for corrective actions or detection conditions and repeat the operation.
4. Check the version of Controller ROM. If it is not the latest, download and update to the latest software revision. (Refer to GP 9 Firmware Version Upgrade)
5. Switch the power off then on.Get the procedures for reproducing an error according to the operation that was performed when the error occurred.
   a. Check the exact occurrence timing during job execution.
   b. Check the job settings from the Panel.
   c. Collect other information as much as possible to reproduce the error.
6. Obtain logs immediately after the error has occurred without turning the power off and on. Perform 2.6 Log RAP.
7. The ESS Board rarely fails, contact Technical Support for further instructions.

003-795 AMS Limit Error RAP

003-795 AMS (auto reduce/enlarge) limit error.

Procedure

Perform the steps that follow:

1. Advise the customer to cancel the job then to change the job properties.
2. Obtain the log file using the log tool. Perform 2.6 Log RAP
   - If there was a reboot after the error had occurred and hence was unable to obtain the log, set NVM (700-530) to “0” to perform log collection and return the NVM (700-530) to “1” after completing the procedure.
3. Change any possible mechanical settings for corrective actions or detection conditions and repeat the operation.
4. Check the version of Controller ROM. If it is not the latest, download and update to the latest software revision. (Refer to GP 9 Firmware Version Upgrade)
5. Switch the power off then on.Get the procedures for reproducing an error according to the operation that was performed when the error occurred.
   a. Check the exact occurrence timing during job execution.
   b. Check the job settings from the Panel.
   c. Collect other information as much as possible to reproduce the error.
6. Obtain logs immediately after the error has occurred without turning the power off and on. Perform 2.6 Log RAP.
7. The ESS Board rarely fails, contact Technical Support for further instructions.

003-940 Insufficient Memory RAP

003-940 Insufficient DAM memory detected.

Procedure

Perform the steps that follow:

1. Advise the customer to cancel the job then to clear the B/W setting for color mode or the side 2 cover image setting, then retry the job.
2. Obtain the log file using the log tool. Perform 2.6 Log RAP
   - If there was a reboot after the error had occurred and hence was unable to obtain the log, set NVM (700-530) to “0” to perform log collection and return the NVM (700-530) to “1” after completing the procedure.
3. Change any possible mechanical settings for corrective actions or detection conditions and repeat the operation.
4. Check the version of Controller ROM. If it is not the latest, download and update to the latest software revision. (Refer to GP 9 Firmware Version Upgrade)
5. Switch the power off then on.Get the procedures for reproducing an error according to the operation that was performed when the error occurred.
   a. Check the exact occurrence timing during job execution.
   b. Check the job settings from the Panel.
   c. Collect other information as much as possible to reproduce the error.
6. Obtain logs immediately after the error has occurred without turning the power off and on. Perform 2.6 Log RAP.
7. The ESS Board rarely fails, contact Technical Support for further instructions.

003-941 Insufficient Page Memory RAP

003-941 There is not enough page memory to store the image.

Procedure

Perform the steps that follow:

1. Advise the customer to change the parameter(s), then retry the job.
2. Obtain the log file using the log tool. Perform 2.6 Log RAP
   - If there was a reboot after the error had occurred and hence was unable to obtain the log, set NVM (700-530) to “0” to perform log collection and return the NVM (700-530) to “1” after completing the procedure.
3. Change any possible mechanical settings for corrective actions or detection conditions and repeat the operation.
4. Check the version of Controller ROM. If it is not the latest, download and update to the latest software revision. (Refer to GP 9 Firmware Version Upgrade)
5. Switch the power off then on.Get the procedures for reproducing an error according to the operation that was performed when the error occurred.
   a. Check the exact occurrence timing during job execution.
   b. Check the job settings from the Panel.
   c. Collect other information as much as possible to reproduce the error.
6. Obtain logs immediately after the error has occurred without turning the power off and on. Perform 2.6 Log RAP.
7. The ESS Board rarely fails, contact Technical Support for further instructions.

003-942, 956 Document Size Auto Detect RAP

003-942 The document size cannot be automatically detected.

003-956 Undefined document size was detected when platen is selected and only APS requires document size selection.

Procedure

Perform the steps that follow:

1. Advise the customer to input an appropriate value for the document size, then retry the job.
2. Obtain the log file using the log tool. Perform 2.6 Log RAP
   - If there was a reboot after the error had occurred and hence was unable to obtain the log, set NVM (700-530) to “0” to perform log collection and return the NVM (700-530) to “1” after completing the procedure.
3. Change any possible mechanical settings for corrective actions or detection conditions and repeat the operation.
4. Check the version of Controller ROM. If it is not the latest, download and update to the latest software revision. (Refer to GP 9 Firmware Version Upgrade)
5. Switch the power off then on.Get the procedures for reproducing an error according to the operation that was performed when the error occurred.
   a. Check the exact occurrence timing during job execution.
   b. Check the job settings from the Panel.
   c. Collect other information as much as possible to reproduce the error.
6. Obtain logs immediately after the error has occurred without turning the power off and on. Perform 2.6 Log RAP,
7. The ESS Board rarely fails, contact Technical Support for further instructions.

003-944 Repeat Image Count Fail RAP

003-944 Incorrect image repeat count (even one image cannot be pasted).

Procedure

Perform the steps that follow:

1. Advise the customer to change the image repeat count parameter, then retry the job.
2. Obtain the log file using the log tool. Perform 2.6 Log RAP
   - If there was a reboot after the error had occurred and hence was unable to obtain the log, set NVM (700-530) to “0” to perform log collection and return the NVM (700-530) to “1” after completing the procedure.
3. Change any possible mechanical settings for corrective actions or detection conditions and repeat the operation.
4. Check the version of Controller ROM. If it is not the latest, download and update to the latest software revision. (Refer to GP 9 Firmware Version Upgrade)
5. Switch the power off then on.Get the procedures for reproducing an error according to the operation that was performed when the error occurred.
   a. Check the exact occurrence timing during job execution.
   b. Check the job settings from the Panel.
   c. Collect other information as much as possible to reproduce the error.
6. Obtain logs immediately after the error has occurred without turning the power off and on. Perform 2.6 Log RAP.
7. The ESS Board rarely fails, contact Technical Support for further instructions.

003-946 Image Rotation (Copy APS) RAP

003-946 Part of the image will be lost if the image is not rotated. However, a paper size that does not support rotation was selected.

Procedure

Perform the steps that follow:

1. Advise the customer to manually select an appropriate paper tray, then retry the job.
2. Obtain the log file using the log tool. Perform 2.6 Log RAP
   - If there was a reboot after the error had occurred and hence was unable to obtain the log, set NVM (700-530) to “0” to perform log collection and return the NVM (700-530) to “1” after completing the procedure.
3. Change any possible mechanical settings for corrective actions or detection conditions and repeat the operation.
4. Check the version of Controller ROM. If it is not the latest, download and update to the latest software revision. (Refer to GP 9 Firmware Version Upgrade)
5. Switch the power off then on.Get the procedures for reproducing an error according to the operation that was performed when the error occurred.
   a. Check the exact occurrence timing during job execution.
   b. Check the job settings from the Panel.
   c. Collect other information as much as possible to reproduce the error.
6. Obtain logs immediately after the error has occurred without turning the power off and on. Perform 2.6 Log RAP.
7. The ESS Board rarely fails, contact Technical Support for further instructions.

003-947, 948 Document Error RAP

003-947 An additional number of documents are required.

003-948 Returned document size mismatch.

Procedure

Perform the steps that follow:

1. Advise the customer to reload the correct number and size of documents, and to correctly program the job on the UI. Retry the job.
2. Obtain the log file using the log tool. Perform 2.6 Log RAP
   - If there was a reboot after the error had occurred and hence was unable to obtain the log, set NVM (700-530) to “0” to perform log collection and return the NVM (700-530) to “1” after completing the procedure.
3. Change any possible mechanical settings for corrective actions or detection conditions and repeat the operation.
4. Check the version of Controller ROM. If it is not the latest, download and update to the latest software revision. (Refer to GP 9 Firmware Version Upgrade)
5. Switch the power off then on.Get the procedures for reproducing an error according to the operation that was performed when the error occurred.
   a. Check the exact occurrence timing during job execution.
   b. Check the job settings from the Panel.
   c. Collect other information as much as possible to reproduce the error.
6. Obtain logs immediately after the error has occurred without turning the power off and on. Perform 2.6 Log RAP.
7. The ESS Board rarely fails, contact Technical Support for further instructions.

003-952 Document Color Mismatch RAP

003-952 Returned document color mismatch (different color detected before/after return).

Procedure

Perform the steps that follow:

1. Advise the customer to correct the job settings, then retry the job.
2. Obtain the log file using the log tool. Perform 2.6 Log RAP
   - If there was a reboot after the error had occurred and hence was unable to obtain the log, set NVM (700-530) to “0” to perform log collection and return the NVM (700-530) to “1” after completing the procedure.
3. Change any possible mechanical settings for corrective actions or detection conditions and repeat the operation.
4. Check the version of Controller ROM. If it is not the latest, download and update to the latest software revision. (Refer to GP 9 Firmware Version Upgrade)
5. Switch the power off then on.Get the procedures for reproducing an error according to the operation that was performed when the error occurred.
   a. Check the exact occurrence timing during job execution.
   b. Check the job settings from the Panel.
   c. Collect other information as much as possible to reproduce the error.
6. Obtain logs immediately after the error has occurred without turning the power off and on. Perform 2.6 Log RAP.
7. The ESS Board rarely fails, contact Technical Support for further instructions.

003-955 Documents Size Exchange Error RAP

003-955 When loading a document with Mixed Size Originals prohibited, a document of different size/orientation from the initial document was detected.

• Only Image Overlay has the function that inhibits different sizes during document added.

Procedure

Perform the steps that follow:

1. Advise the customer to reload the document then retry the job.
2. Obtain the log file using the log tool. Perform 2.6 Log RAP
   - If there was a reboot after the error had occurred and hence was unable to obtain the log, set NVM (700-530) to “0” to perform log collection and return the NVM (700-530) to “1” after completing the procedure.
3. Change any possible mechanical settings for corrective actions or detection conditions and repeat the operation.
4. Check the version of Controller ROM. If it is not the latest, download and update to the latest software revision. (Refer to GP 9 Firmware Version Upgrade)
5. Switch the power off then on.Get the procedures for reproducing an error according to the operation that was performed when the error occurred.
   a. Check the exact occurrence timing during job execution.
   b. Check the job settings from the Panel.
   c. Collect other information as much as possible to reproduce the error.
6. Obtain logs immediately after the error has occurred without turning the power off and on. Perform 2.6 Log RAP.
7. The ESS Board rarely fails, contact Technical Support for further instructions.

003-956 Documents Size Unknown Error RAP

003-956 Undefined document size was detected when Platen is selected and only APS requires document size selection.

Procedure

Perform the steps that follow:

1. Advise the customer to verify the correct document size for the job, change if needed, then retry the job.
2. Obtain the log file using the log tool. Perform 2.6 Log RAP
   - If there was a reboot after the error had occurred and hence was unable to obtain the log, set NVM (700-530) to “0” to perform log collection and return the NVM (700-530) to “1” after completing the procedure.
3. Change any possible mechanical settings for corrective actions or detection conditions and repeat the operation.
4. Check the version of Controller ROM. If it is not the latest, download and update to the latest software revision. (Refer to GP 9 Firmware Version Upgrade)
5. Switch the power off then on.Get the procedures for reproducing an error according to the operation that was performed when the error occurred.
   a. Check the exact occurrence timing during job execution.
   b. Check the job settings from the Panel.
   c. Collect other information as much as possible to reproduce the error.
6. Obtain logs immediately after the error has occurred without turning the power off and on. Perform 2.6 Log RAP.
7. The ESS Board rarely fails, contact Technical Support for further instructions.

003-963, 965, 966 ATS/APS RAP

003-963 No APS compatible tray to set the relevant size.

003-965 There was no paper in the tray that can be selected for APS.

003-966 There is no APS tray that is set to a specific size selected.

Procedure

Perform the steps that follow:

1. Advise the customer to select a tray that has the correct size of paper, then retry the job.
2. Obtain the log file using the log tool. Perform 2.6 Log RAP
   - If there was a reboot after the error had occurred and hence was unable to obtain the log, set NVM (700-530) to “0” to perform log collection and return the NVM (700-530) to “1” after completing the procedure.
3. Change any possible mechanical settings for corrective actions or detection conditions and repeat the operation.
4. Check the version of Controller ROM. If it is not the latest, download and update to the latest software revision. (Refer to GP 9 Firmware Version Upgrade)
5. Switch the power off then on.Get the procedures for reproducing an error according to the operation that was performed when the error occurred.
   a. Check the exact occurrence timing during job execution.
   b. Check the job settings from the Panel.
   c. Collect other information as much as possible to reproduce the error.
6. Obtain logs immediately after the error has occurred without turning the power off and on. Perform 2.6 Log RAP.
7. The ESS Board rarely fails, contact Technical Support for further instructions.

003-970, 976 FAX Line Memory RAP

003-970 The number of slow-scan lines has exceeded the upper limit due to FAX parallel composition, long- document enlargement, etc.

003-976 Number of lines in the slow scan direction exceeded during FAX N-up.

Procedure

Perform the steps that follow:

1. Advise the customer to press the continue button to store as much data as the memory capacity, then continue scanning the next document. Otherwise, cancel the job.
2. Switch off then switch on the machine, GP 10.
3. If the fault persists, reload the software, GP 4.

003-971 Prevention Code Detect With The Right To Cancel RAP

003-971 When job scan was executed by a user who has the permission to temporarily clear the copy restriction code detection, copy restriction codes were detected in the document.

Procedure

Perform the steps that follow:

1. Advise the customer that because this document cannot be copied, press the “Cancel” or “Continue” button on the panel.
2. If the fault persists, reload the software, GP 4.

003-972 Maximum Stored Page RAP

003-972 When scanning a document, the number of pages that has accumulated in the machine has exceeded the value of ’Maximum Stored Number of Copy Sheets’ set in system data.

Procedure

Perform the steps that follow:

1. Advise the customer to set the number of pages of the document to be within the maximum number of pages that can be stored.
2. Obtain the log file using the log tool. Perform 2.6 Log RAP
   - If there was a reboot after the error had occurred and hence was unable to obtain the log, set NVM (700-530) to “0” to perform log collection and return the NVM (700-530) to “1” after completing the procedure.
3. Change any possible mechanical settings for corrective actions or detection conditions and repeat the operation.
4. Check the version of Controller ROM. If it is not the latest, download and update to the latest software revision. (Refer to GP 9 Firmware Version Upgrade)
5. Switch the power off then on.Get the procedures for reproducing an error according to the operation that was performed when the error occurred.
   a. Check the exact occurrence timing during job execution.
   b. Check the job settings from the Panel.
   c. Collect other information as much as possible to reproduce the error.
6. Obtain logs immediately after the error has occurred without turning the power off and on. Perform 2.6 Log RAP.
7. The ESS Board rarely fails, contact Technical Support for further instructions.

003-973 Image Rotation RAP

003-973 The document and the image are different in orientation (except when poster is specified). When rotation is not available even though the orientation of the document and the image are different and part of the image will be lost if it is not rotated.

Procedure

Perform the steps that follow:

1. Advise the customer to verify the image loss and use a larger paper size if available. Or use reduction to make a smaller document, then retry the job.
2. Obtain the log file using the log tool. Perform 2.6 Log RAP
   - If there was a reboot after the error had occurred and hence was unable to obtain the log, set NVM (700-530) to “0” to perform log collection and return the NVM (700-530) to “1” after completing the procedure.
3. Change any possible mechanical settings for corrective actions or detection conditions and repeat the operation.
4. Check the version of Controller ROM. If it is not the latest, download and update to the latest software revision. (Refer to GP 9 Firmware Version Upgrade)
5. Switch the power off then on.Get the procedures for reproducing an error according to the operation that was performed when the error occurred.
   a. Check the exact occurrence timing during job execution.
   b. Check the job settings from the Panel.
   c. Collect other information as much as possible to reproduce the error.
6. Obtain logs immediately after the error has occurred without turning the power off and on. Perform 2.6 Log RAP.
7. The ESS Board rarely fails, contact Technical Support for further instructions.

003-974 Next Original Specification RAP

003-974 Next document specified. Scanning has been completed for all loaded documents.

Procedure

Perform the steps that follow:

1. Ask the customer to verify that scanning is complete or if other documents should be loaded.
2. Obtain the log file using the log tool. Perform 2.6 Log RAP
   - If there was a reboot after the error had occurred and hence was unable to obtain the log, set NVM (700-530) to “0” to perform log collection and return the NVM (700-530) to “1” after completing the procedure.
3. Change any possible mechanical settings for corrective actions or detection conditions and repeat the operation.
4. Check the version of Controller ROM. If it is not the latest, download and update to the latest software revision. (Refer to GP 9 Firmware Version Upgrade)
5. Switch the power off then on.Get the procedures for reproducing an error according to the operation that was performed when the error occurred.
   a. Check the exact occurrence timing during job execution.
   b. Check the job settings from the Panel.
   c. Collect other information as much as possible to reproduce the error.
6. Obtain logs immediately after the error has occurred without turning the power off and on. Perform 2.6 Log RAP.
7. The ESS Board rarely fails, contact Technical Support for further instructions.

003-977 Document Mismatch (Multi Scan) RAP

003-977 Document size mismatch (document exchange during multi scan).

Procedure

Perform the steps that follow:

1. Ask the customer to load a correct size document, then retry the job.
2. Obtain the log file using the log tool. Perform 2.6 Log RAP
   - If there was a reboot after the error had occurred and hence was unable to obtain the log, set NVM (700-530) to “0” to perform log collection and return the NVM (700-530) to “1” after completing the procedure.
3. Change any possible mechanical settings for corrective actions or detection conditions and repeat the operation.
4. Check the version of Controller ROM. If it is not the latest, download and update to the latest software revision. (Refer to GP 9 Firmware Version Upgrade)
5. Switch the power off then on.Get the procedures for reproducing an error according to the operation that was performed when the error occurred.
   a. Check the exact occurrence timing during job execution.
   b. Check the job settings from the Panel.
   c. Collect other information as much as possible to reproduce the error.
6. Obtain logs immediately after the error has occurred without turning the power off and on. Perform 2.6 Log RAP.
7. The ESS Board rarely fails, contact Technical Support for further instructions.

003-978 Color Document Mismatch (Multi Scan) RAP

003-978 Document color mismatch (document replacement during multi scan).

Procedure

Perform the steps that follow:

1. Advise the customer to reload the correct size paper, then retry the job.
2. Obtain the log file using the log tool. Perform 2.6 Log RAP
   - If there was a reboot after the error had occurred and hence was unable to obtain the log, set NVM (700-530) to “0” to perform log collection and return the NVM (700-530) to “1” after completing the procedure.
3. Change any possible mechanical settings for corrective actions or detection conditions and repeat the operation.
4. Check the version of Controller ROM. If it is not the latest, download and update to the latest software revision. (Refer to GP 9 Firmware Version Upgrade)
5. Switch the power off then on.Get the procedures for reproducing an error according to the operation that was performed when the error occurred.
   a. Check the exact occurrence timing during job execution.
   b. Check the job settings from the Panel.
   c. Collect other information as much as possible to reproduce the error.
6. Obtain logs immediately after the error has occurred without turning the power off and on. Perform 2.6 Log RAP.
7. The ESS Board rarely fails, contact Technical Support for further instructions.

005-121, 123, 124, 125, 210, 275, 305, 900, 906, 908, 911, 940 DADF JAM RAP

005-121 Jam in the Document Feeder.

005-123 Jam in the Document Feeder.

005-124 Virtual JAM.

005-125 Jam in the Document Feeder.

005-210 DADF Download Fail

005-275 DADF RAM Fail.

005-305 The Document Feeder Cover is Open.

005-906 JAM in the Document Feeder.

005-908 JAM in the Document Feeder.

005-911 JAM in the Document Feeder.

005-940 A document was pulled out during document feed.

Possible Parts Affected

DADF ASSY PL 50.1 Item 1

FEEDER ROLL DADF PL 50.1 Item 5

ESS Board PL 18.1 Item 5

Procedure

WARNING

Ensure that the electricity to the machine is switched off while performing tasks that do not need electricity. Refer to GP 4. Disconnect the power cord. Electricity can cause death or injury. Moving parts can cause injury.

Perform the steps that follow:

1. Verify no obstructions in the paper path and the document meets the feeder specification.
2. Verify there are no obstructions of the DADF ASSY and the DADF ASSY closes against the platen glass correctly.
3. Check the connection at the DADF ASSY and the ESS Board, verify P/J1371 and P/J1377 are fully seated.
4. Verify proper installation and condition of the DADF ASSY looking for any unusual wear or damage.
5. Install a new DADF Feed Roller Kit REP 50.1.99
6. Install a new DADF ASSY REP 50.1.1
7. , install a new ESS Board REP 18.1.5

005-500 Write to DADF-ROM Error RAP

005-500 An error has occurred during the process of writing data to the DADF-ROM.

Procedure

WARNING

Ensure that the electricity to the machine is switched off while performing tasks that do not need electricity. Refer to GP 4. Disconnect the power cord. Electricity can cause death or injury. Moving parts can cause injury.

Perform the steps that follow:

1. Reload the software, GP 4
2. Install a new DADF ASSY REP 50.1.1

005-941 Not Enough Documents RAP

005-941 Some originals were missing after all originals were returned.

Procedure

Perform the steps that follow:

1. Reset documents in accordance with UI.
2. Cancel all jobs and restart the job again.

010-105, 106 FUSING ASSY Exit Sensor RAP

010-105 FUSING ASSY Exit SNR ON - After Regi Clutch ON, Exit Sensor is not turned OFF by paper within specified time.

- MFP: Jam in the Device - Error 010-105
- SFP: Paper Jam - Open Rear Door and Inner Door

110-106 FUSING ASSY Exit SNR OFF - After Regi Clutch OFF, Exit Sensor is not turned ON by paper within specified time.

- MFP: Jam in the Device - Error 010-106
- SFP: Paper Jam - Open Rear Door and Inner DooR

Possible Parts Affected

- KIT COVER ASSY REAR PL 19.2 Item 99
- Exit Sensor [FUSING ASSY] PL 7.1 Item 1
- CHUTE ASSY EXIT PL 17.1 Item 1
- Exit Clutch [DRIVE ASSY EXIT MAIN] PL 17.1 Item 4
- MCU Board, PL 18.1 Item 1 (MFP), PL 18.5 Item 1 (SFP)

Procedure

WARNING

Ensure that the electricity to the machine is switched off while performing tasks that do not need electricity. Refer to GP 4 . Disconnect the power cord. Electricity can cause death or injury. Moving parts can cause injury.

Perform the steps that follow:

1. Verify no obstructions in the paper path and the document meets the feeder specification.
2. Verify the REAR COVER PL 19.2 Item 12 is not damaged.
   a. Install a new KIT COVER ASSY REAR PL 19.2 Item 99
3. Verify the CHUTE ASSY EXIT PL 17.1 Item 1 is not damaged.
   a. Install a new Exit Chute Assembly REP 17.1.1
4. Reseat the FUSING ASSY PL 7.1 Item 1
5. Execute the diagnosis dC330 [071-104], and check the Exit Sensor operation.
   a. Check the connection between the Exit Sensor and the MCU Board at P/J270 and P/J272 and verify they are fully seated (Refer to Figure 1).
   b. Check the continuity between the Exit Sensor and the Relay Connector, verifying each cable of P/J270<=>P/J272 for continuity.
   c. Check the voltage between the MCU Board ground and the P/J272-3 pin is about +5 VDC.
      i. Check the connection at the LVPS Board and the MCU Board P/J284 and P/J280 are fully seated.
      ii. Check the continuity between the LVPS Board and the MCU Board verify each cable of P/J284<=>P/J280.
      iii. Check the voltage from the LVPS Board (+5 VDC). Voltage between the LVPS Board ground and the P/J284-5 pin should be about +5 VDC.
      iv. Check the connections at LVPS Board and the MCU Board, P/J284 and P/J280 are fully seated.
      v. Check continuity between the LVPS Board and the MCU Board verify each cable of P/J284<=>P/J280 is continuous.
         - Install a new or repair the LV MCU HARNESS ASSY PL 18.4 Item 5 (MFP) PL 18.8 Item 5 (SFP).
      vi. Check the voltage from the LVPS Board ground and the P/J284-5 pin is about +5 VDC.
   d. Install a new CHUTE ASSY EXIT REP 17.1.1
6. Execute the diagnosis dC330 [071-105], and check the Exit Clutch operation.
7. Check the connection between the Exit Clutch and the MCU Board at P/J460 and P/J462 and verify they are fully seated (Refer to Figure 2).
8. Check the continuity between the Exit Clutch and the Relay Connector, verifying each cable of P/J460<=>P/J462 for continuity.
9. Close all interlock switches. Voltage between the MCU Board ground and the P/J460-4 pin should read approximately +24VDC.
   a. Check the connections at the LVPS Board and the MCU Board, verify P/J284 and P/J280 are fully seated.
   b. Check continuity between the LVPS Board and the MCU Board verify each cable of P/J284<=>P/J280 is continuous.
      - Install a new or repair the LV MCU HARNESS ASSY PL 18.4 Item 5 (MFP) PL 18.8 Item 5 (SFP).
   c. Close all interlock switches and verify the voltage from the LVPS Board ground and the P/J284-18 pin and the voltage from the LVPS Board ground and the P/J284-20 pin is about +24 VDC.
10. Install a new Main Exit Drive Assembly REP 17.1.4
11. Install a new Fuser REP 7.1.1
12. Power the machine down then back up, GP 4 .
13. If the fault persists, install a new MCU Board REP 18.1.1(MFP) REP 18.5.1(SFP)

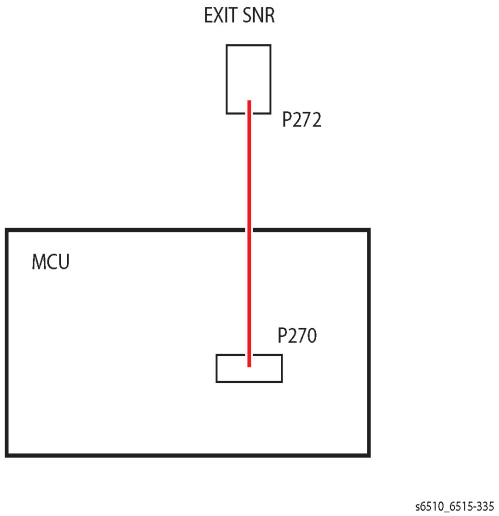

Figure 1

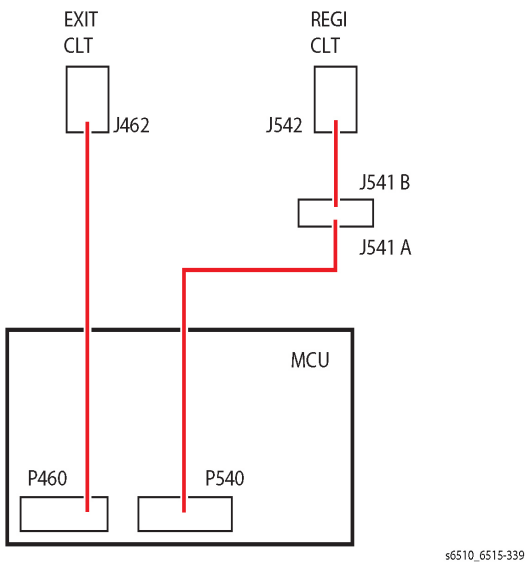

Figure 2

010-331, 338, 344, 058-310, 311, 315, 316, 059-315, 326, 099-396-399 FUSING ASSY RAP

010-331: FUSING ASSY HR STS Over Temperature Fail

010-338: FUSING ASSY HR On Time Fail (Wait)

010-344: FUSING ASSY HR STS Low Temperature Fail

058-310: Fusing Ep U4 Notrdy Nc Fail

058-311: Fusing Ep U4 Notrdy Sts Fail)

058-315: FUSING ASSY HR STS Center Broken Fail

058-316: Fusing Unit HB STS Center Low Temperature Fail

059-315: FUSING ASSY HR STS Center Over Temperature Fail

059-326: FUSING ASSY HR STS Disconnection Fail

099-396: Fusing Ep U4 Noheat Center Fail

099-397: Fusing Ep U4 Slowheat Center Fail

099-398: Fusing Ep U4 Fastheat Center Fail

099-399: Fusing Ep U4 Under Side Fail

Possible Parts Affected

- FUSING ASSY PL 7.1 Item 1
- Fuser Harness (DC) (J270-J272, J273) PL 18.3 Item 2 (MFP) PL 18.7 Item 2 (SFP)
- Fuser Harness (AC) 110VAC (J283-P275) PL 18.3 Item 3A (MFP) PL 18.7 Item 3A (SFP)
- Fuser Harness (AC) 220VAC(J283-P275) PL 18.3 Item 3B (MFP) PL 18.7 Item 3B (SFP)
- LV MCU Harness Assy (J280-J284) PL 18.4 Item 5 (MFP) PL 18.8 Item 5(SFP)
- LVPS Board PL 18.1 Item 16 (MFP), PL 18.5 Item 16 (SFP)
- MCU Board, PL 18.1 Item 1 (MFP), PL 18.5 Item 1 (SFP)

Procedure

WARNING

Ensure that the electricity to the machine is switched off while performing tasks that do not need electricity. Refer to GP 4 . Disconnect the power cord. Electricity can cause death or injury. Moving parts can cause injury.

WARNING

Do not touch the Fuser while it is hot.

Perform the steps that follow:

1. Verify the FUSING ASSY and the drawer connector of the printer are installed properly (without a bent pin, or any foreign or burnt objects, etc.).

2. Check the connection between the FUSING ASSY and the MCU Board and FUSING ASSY and LVPS Board (P/J283, P/J275, P/J270, and P/J273) are fully seated. (Refer to Figure 1).
3. Check the connection between the LVPS Board and the MCU Board (P/J284, P/J280) are fully seated.
4. Check the continuity between the Fuser Harness (AC) 110VAC in each cable of P/J283<=>P/J275.
   - Install a new Fuser Harness (AC) 110VAC.
5. Check the continuity between the LV MCU Harness Assy (J280-J284) in each cable of P/J284<=>P/J280.
   - Install a new LV MCU HARNESS ASSY PL 18.4 Item 5.
6. Install a new MCU Board, REP 18.1.1 (MFP), REP 18.5.1 (SFP)
7. Install a new LVPS Board REP 18.1.16 (MFP) REP 18.5.16 (SFP)

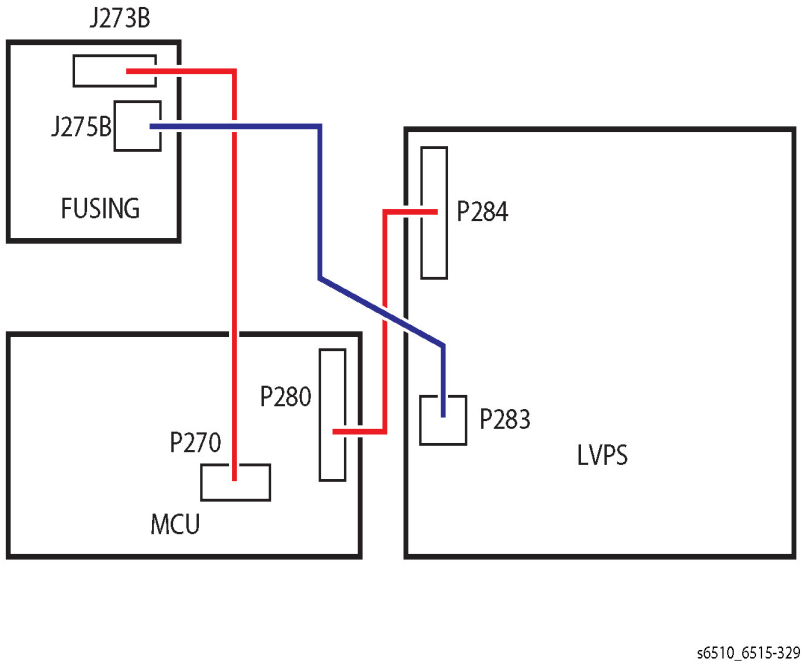

Figure 1

016-211, 016-212 SW Option Fail Memory Low RAP

016-211 Insufficient system memory was detected.

016-212 Insufficient Page Memory was detected.

Procedure

Perform the steps that follow:

1. Power down then power up the machine, GP 4 .
2. Refer the customer to the User Guide to check memory usage.

016-214 SW Option Fail (FAX Card) RAP

016-214 The FAX card was not installed or an error was detected when SW optional function was enabled.

Procedure

WARNING

Ensure that the electricity to the machine is switched off while performing tasks that do not need electricity. Refer to GP 4. Disconnect the power cord. Electricity can cause death or injury. Moving parts can cause injury.

Perform the steps that follow:

1. Power down then power up the machine, GP 4 .
2. Verify FAX Board PL 18.1 Item 9 is correctly installed, **the error persists,**
3. Install a new FAX Board, REP 18.1.9.

016-234, 016-235 XCP Error RAP

016-234 Lack of memory causes the XCP to stop.

016-235 Another internal error causes the XCP function to stop.

Procedure

WARNING

Ensure that the electricity to the machine is switched off while performing tasks that do not need electricity. Refer to GP 4. Disconnect the power cord. Electricity can cause death or injury. Moving parts can cause injury.

Perform the steps that follow:

1. Power down then power up the machine, GP 4 .
2. Start “Special Boot Mode” GP 15 and initiate “HDD Initialize Mode”.
   - Although there is no HDD option for this printer GP 15 “HDD Initialize Mode” is the procedure to initialize the eMMC Card.

   NOTE: *After HHD Initialize, it may be necessary to verify the Device ID following dC132*

016-242 System GMT Clock Fail RAP

016-242 System GMT clock fail.

Procedure

WARNING

Ensure that the electricity to the machine is switched off while performing tasks that do not need electricity. Refer to GP 4 . Disconnect the power cord. Electricity can cause death or injury. Moving parts can cause injury.

Perform the steps that follow:

1. Power down then power up the machine, GP 4 .
2. Set the current date and time, **the error persists,**
3. Install a new ESS Board REP 18.1.5 .

016-244 Self-Signed Certificate Auto Update Fail RAP

016-244 Self-sIgned certificate auto update failure.

Procedure

WARNING

Ensure that the electricity to the machine is switched off while performing tasks that do not need electricity. Refer to GP 4 . Disconnect the power cord. Electricity can cause death or injury. Moving parts can cause injury.

Perform the steps that follow:

1. Power down then power up the machine, GP 4 .
2. Perform 2.6 Log and contact Support with the appropriate log files for further assistance.

016-310 SSMM Job Log Full RAP

016-310 A job log file was not retrieved from the external application (AWAS) and the number of files stored exceeded the specified value (280).

Procedure

Perform the steps that follow:

1. Power down then power up the machine, GP 4.
2. Obtain the job log file from the external application (AWAS) via SSMI.
   a. Power down then power up the machine, GP 4, **the error persists,**
   b. Contact Supoort for further instruction.

016-311, 315, 319, 062-277, 311, 316, 360, 371, 380, 386, 389, 393, 396, 065-221 to 225 Scanner/IIT Errors RAP

016-311:No Scanner that Should Be

016-315:IIT Interface Fail

016-319:Long Boot Diag IIT Interface Fail

016-354:Cont IIT-Controller Comunication Fail

062-277:IISS-DADF Communication Fail

062-311:IISS LOGIC Fail

062-316:DADF Motor Fail

062-360:CRG Position Fail

062-371:Lamp Illumination Fail

062-380:AGC Fail

062-386:AOC Fail

062-389:CRG Over Run Fail

062-393:CCD PWBA Sync Signal Fail

062-396:CIS Cable Connection Fail

065-221:CIS AGC Fail

065-222:CIS AOC Fail

065-223:CIS Connection Fail

065-224:CIS Device Fail

065-225:CIS FAIL

Possible Parts Affected

DADF ASSY PL 50.1 Item 1

IIT ASSY PL 50.1 Item 2

ESS Board PL 18.1 Item 5 (MFP), PL 18.5 Item 5 (SFP)

Initial Action

1. Power down then power up the machine to check if the error recurs GP 4 .

- **062-380 / 065-221/ 065-222/ 065-225 only**: Clean the document glass and the white stripe before proceeding.

Procedure

WARNING

Ensure that the electricity to the machine is switched off while performing tasks that do not need electricity. Refer to GP 4 . Disconnect the power cord. Electricity can cause death or injury. Moving parts can cause injury.

Perform the steps that follow:

1. Check the connection at the ESS Board and the IIT ASSY, verify P/J1370, P/J1374 and P/J1372 are fully seated.
   a. Install a new IIT ASSY REP 50.1.2
2. Check the connection at the ESS Board and the DADF ASSY, verify P/J1371 and P/J1377 are fully seated.
   a. Install a new DADF ASSY REP 50.1.1 , **the error persists,**
3. Install a new ESS Board REP 18.1.5(MFP) REP 18.5.5(SFP)

016-320 Document Formatter Fatal Error RAP

016-320 A software error was detected when documents were converted.

Initial Actions

Collect the detailed procedures below from the customer when a trouble occurred.

1. In which mode the problem occur? (Copy/Scan/Print/Fax)
2. What job was performed when the problem occurred?
3. Check the job settings from the UI.
4. Collect other information as much as possible to reproduce the error.
   - For Jobs that went through a network, also collect the output report and the network configuration.
   - For Print, also Obtain the PRN file of the Job if possible.

Procedure

WARNING

Ensure that the electricity to the machine is switched off while performing tasks that do not need electricity. Refer to GP 4. Disconnect the power cord. Electricity can cause death or injury. Moving parts can cause injury.

Perform the steps that follow:

1. Obtain the log file using the log tool. Perform 2.6 Log RAP
   - If there was a reboot after the error had occurred and hence was unable to Obtain the log, set NVM (700-530) to'0' to perform log collection and return the NVM (700-530) to'1' after completing the procedure.
2. Perform Hardware Diagnostic using the LONGDIAG MODE in the Special Booting Menu. (Refer to [2.8 Special Booting])
3. Check the version of Controller ROM. If it is not the latest, download and update to the latest software revision. (Refer to Firmware Version Upgrade GP 9 .)
4. Turn the power off and on.

   5.The error persists after turning the power off and on GP 4, Obtain the log file using the log tool. Perform 2.6 Log RAP
6. Turn off the Power GP 4, unplug the power cord for 2 minutes, then turn on the Power again GP 4 to perform the same operation where the error occurred.
7. Verify the wire harness connections on each board are installed properly, then perform the same operation creating the error.
8. Install a new ESS Board REP 18.1.2 (MFP), REP 18.5.2 (SFP) and perform the same operation where the error occurred, **the error persists**.
9. Reinstall the original ESS Board and contact the Support Department for instructions.

016-321 FAX Module Error RAP

016-321 FAX related error at booting.

Initial Actions

Get the procedures for reproducing an error according to the operation that was performed when the error occurred.

1. Check the job type: Send Mail, Receive Mail, Broadcast Send, Polling, or Folder Receipt.
2. Check the job settings from the Panel.
3. Check whether it is Speed Dial or Keypad Dial.
4. Check which function was used: G3 or G4.
   - Collect other procedures as much as possible to reproduce the error.

Procedure

WARNING

Ensure that the electricity to the machine is switched off while performing tasks that do not need electricity. Refer to GP 4. Disconnect the power cord. Electricity can cause death or injury. Moving parts can cause injury.

Perform the steps that follow:

1. Verify the FAX Board PL 18.1 Item 9 and Fax Harness Assy PL 18.1 Item 10 connections are seated fully.
2. Obtain the Fax-related reports (Protocol Monitor, Activity Report, Configuration Report, Scan / Fax Configuration, and Job History Report).
   - Depending on the situation, such as in the cases of Broadcast Send or Folder Receipt, Obtain the Speed Dial list or Stored Document list.
3. Check the version of Controller ROM. If it is not the latest, download and update to the latest software revision. (Refer Firmware Version Upgrade GP 9).
4. Perform the same operation where the error occurred.
   - **The error persists**, replace the Front USB Harness Assy PL 18.1 Item 14 .
5. Immediately after the error occurs, Obtain the log file using the log tool. Perform 2.6 Log RAP
6. Install a new FAX Board REP 18.1.9 and perform the operation again, **the error persists**,
7. Reinstall the original FAX Board and contact the Support for instructions.

016-323 B-Formatter Fatal Error RAP

016-323 Fatal error has occurred in the B-formatter task.

Initial Actions

Collect the detailed procedures below from the customer when a trouble occurred.

1. In which mode the problem occur? (Copy/Scan/Print/Fax)
2. What job was performed when the problem occurred?
3. Check the job settings from the UI.
4. Collect other information as much as possible to reproduce the error.
   - For Jobs that went through a network, also collect the output report and the network configuration.
   - For Print, also Obtain the PRN file of the Job if possible.

Procedure

WARNING

Ensure that the electricity to the machine is switched off while performing tasks that do not need electricity. Refer to GP 4. Disconnect the power cord. Electricity can cause death or injury. Moving parts can cause injury.

Perform the steps that follow:

1. Obtain the log file using the log tool. Perform 2.6 Log RAP
   - If there was a reboot after the error had occurred and hence was unable to Obtain the log, set NVM (700-530) to'0' to perform log collection and return the NVM (700-530) to'1' after completing the procedure.
2. Perform Hardware Diagnostic using the LONGDIAG MODE in the Special Booting Menu. (Refer to GP 15 Special Booting.)
3. Check the version of Controller ROM. If it is not the latest, download and update to the latest software revision. Refer to Firmware Version Upgrade GP 9
4. Turn the power off and on.

   5.The error persists after turning the power off and on GP 4, Obtain the log file using the log tool. Perform 2.6 Log RAP
6. Turn off the Power GP 4, unplug the power cord for 2 minutes, then turn on the Power again GP 4 to perform the same operation where the error occurred.
7. Verify the wire harness connections on each board are installed properly, then perform the same operation creating the error.
8. Install a new ESS Board REP 18.1.2 (MFP), REP 18.5.2 (SFP) and perform the same operation where the error occurred, **the error persists**.
9. Reinstall the original ESS Board and contact the Support Department for instructions.

016-324 Scheduled Image Overwrite RAP

016-324 Scheduled image overwrite.

Procedure

Power down then power up the machine, GP 4.

016-325 Using Personal Certificate RAP

016-325 The IC card personal certificate is set in the certificate for signing.

Procedure

Perform the steps that follow:

1. Power down then power up the machine, GP 4 .
2. Enter dC131. Set NVM value 790-389 to 0.

016-326, 362, 607 UI Cable Connection Fail RAP

016-326: Cont-UI Cable Connection Fail The controller has detected a failure at its cable connection with the UI.

016-362: Cont UI Fail-2

016-607: Cont-UI Cable Connection Fail

Possible Parts Affected

CONSOLE ASSY UI **AIO** PL 1.1 Item 1

CONSOLE ASSY UI **SFP** PL 1.2 Item 1

HARNESS ASSY FRONT USB PL 18.1 Item 14

ESS Board PL 18.1 Item 5 (MFP), PL 18.5 Item 5 (SFP)

Initial Action

1. Power down then power up the machine to check if the error recurs GP 4 .

Procedure

WARNING

Ensure that the electricity to the machine is switched off while performing tasks that do not need electricity. Refer to GP 4. Disconnect the power cord. Electricity can cause death or injury. Moving parts can cause injury.

Perform the steps that follow: **MFP**

1. Check the connection at the CONSOLE ASSY UI AIO and the ESS Board, verify P/J1352 is fully seated, **the error persists,**
2. Install a new CONSOLE ASSY UI AIO REP 1.1.1
3. Upgrade the Firmware GP 9.
4. HARNESS ASSY FRONT USB PL 18.1 Item 14
5. Install a new ESS Board REP 18.1.5

Perform the steps that follow: **SFP**

1. Check the connection at the CONSOLE ASSY UI SFP and the ESS Board, verify P/J1352 is fully seated, **the error persists,**
2. Install a new CONSOLE ASSY UI SFP REP 1.2.1
3. Upgrade the Firmware GP 9.
4. Install a new ESS Board REP 18.5.5 (SFP)

016-328 Connection Fail RAP

016-328 The controller has detected a failure at its cable connection with the MCU.

Procedure

WARNING

Ensure that the electricity to the machine is switched off while performing tasks that do not need electricity. Refer to GP 4 . Disconnect the power cord. Electricity can cause death or injury. Moving parts can cause injury.

Perform the steps that follow:

1. Power down then power up the machine, GP 4 .
2. Verify all connectors between the ESS Board and the MCU Board, and all surface mounted modules such as the eMMC Card, are fully seated.
3. Install a new ESS-PWR-C Harness Assy PL 18.4 Item 1 (MFP) PL 18.8 Item 1 (SFP).

016-330, 331, 332 Cont System Memory Fail RAP

016-330 Cont system memory diagnostic fail 1.

016-331 Cont system memory diagnostic fail 2.

016-332 Cont system memory diagnostic fail 3.

Procedure

WARNING

Ensure that the electricity to the machine is switched off while performing tasks that do not need electricity. Refer to GP 4 . Disconnect the power cord. Electricity can cause death or injury. Moving parts can cause injury.

Perform the steps that follow:

1. Power down then power up the machine, GP 4 .
2. Verify all connectors between the ESS Board and the MCU Board, and all surface mounted modules such as the eMMC Card, are fully seated.
3. Install a new ESS Board, REP 18.1.5 (MFP), REP 18.5.5 (SFP).

016-342 to 016-345 Controller Fail RAP

016-342 Cont RTC diagnostic fail.

016-343 Long boot diag timer fail.

016-345 Cont NVM diagnostic fail.

Procedure

WARNING

Ensure that the electricity to the machine is switched off while performing tasks that do not need electricity. Refer to GP 4 . Disconnect the power cord. Electricity can cause death or injury. Moving parts can cause injury.

Perform the steps that follow:

1. Power down then power up the machine, GP 4 .
2. Verify the time and date are set correctly for the customer location.
3. Reload or update the Firmware, GP 9 , the error persists, GP 9 , **the error persists,**
4. Install a new ESS Board REP 18.1.5 (MFP), REP 18.5.5 (SFP).

NOTE: *RTC is set as GMT;*

'Local Time' setting will be separately done by customer.

Case1: If 'Local Time' is not set by customers, they need to set as initial setting for 'Local Time'.

Case2: If 'Local Time' has been set by customers already, they don't need to set it again.

016-346 Cont A4FAX Modem Diagnosis Fail RAP

016-346 An A4 Fax Modem diagnosis error was detected by the Boot Diag.

Procedure

WARNING

Ensure that the electricity to the machine is switched off while performing tasks that do not need electricity. Refer to GP 4 . Disconnect the power cord. Electricity can cause death or injury. Moving parts can cause injury.

Perform the steps that follow:

1. Power down then power up the machine, GP 4 .
2. Reload or update the Firmware, GP 9 , **the error persists,**
3. Install a new FAX Board REP 18.1.9 .
4. Install a new ESS Board REP 18.1.5 (MFP), REP 18.5.5 (SFP).

016-349, 350, 351 eMMC Card Errors RAP

016-349 Cont MAC address data fail.

016-350 Cont SEEP-ROM diagnostic fail 1.

016-351 Cont SEEP-ROM diagnostic fail 2.

Procedure

WARNING

Ensure that the electricity to the machine is switched off while performing tasks that do not need electricity. Refer to GP 4 . Disconnect the power cord. Electricity can cause death or injury. Moving parts can cause injury.

Perform the steps that follow:

1. Power down then power up the machine, GP 10.
2. Remove and reseat the eMMC Card.
3. Install a new ESS Board REP 18.1.5 (MFP), REP 18.5.5 (SFP), **the error persists,**
4. Contact Support for further instruction.

016-352, 609, 610 Internal Network Init/PCI/PCIEX Fail RAP

016-352: Internal Network Initialize Fail Internal network initialization error.

016-609: PCI Option No Support Device Fail PCI Option No Support Device Fail.

016-610: PCIEX Option No Support Device Fail PCIEX Option No Support Device Fail.

Procedure

Perform the steps that follow:

1. Power down then power up the machine, GP 4 .
2. Verify version, reload, or update the Firmware using the Download Mode procedure in GP 15 Special Boot Menu the error persists,
3. Install a new ESS Board REP 18.1.5 (MFP), REP 18.5.5 (SFP), **the error persists,**

016-353, 356, 606 IOT-Controller Communication Fail RAP

016-353: Cont IOT-Controller Comunication Fail Communication cannot be established between the IOT and the ESS.

016-356: Cont Video ASIC Fail Communication cannot be established between the IIT and the controller.

016-606: Cont-BP Cable Connection Fail Fault in the connection with the back plane is detected by the controller.

016-608 Cont-MCU cable connection fail.

Possible Parts Affected

ESS MCU FFC PL 18.1 Item 2 (MFP), PL 18.5 Item 2 (SFP)

ESS Board PL 18.1 Item 5 (MFP), PL 18.5 Item 5 (SFP)

MCU Board PL 18.1 Item 1 (MFP), PL 18.5 Item 1 (SFP)

Procedure

WARNING

Ensure that the electricity to the machine is switched off while performing tasks that do not need electricity. Refer to GP 4 . Disconnect the power cord. Electricity can cause death or injury. Moving parts can cause injury.

Perform the steps that follow:

1. Power down then power up the machine GP 4 .
2. Check the connections at the ESS Board and the MCU Board, verify P/J300 and P/J335 are fully seated.
3. Check continuity between the ESS Board and the MCU Board verify each cable of P/J300<=>P/J335 is continuous.
   - Install a new ESS MCU FFC, REP 18.1.1 (MFP) REP 18.5.1 (SFP).
4. Verify all harness connections between the ESS Board and the MCU Board, and all surface mounted modules such as the eMMC Card, are fully seated, **the error persists,**
5. Install a new components as necessary:
   - ESS Board REP 18.1.5 (MFP), REP 18.5.5 (SFP)
   - MCU Board REP 18.1.5 (MFP), REP 18.5.5 (SFP)

016-355, 016-356 Controller ASIC Fail RAP

016-355:Cont IO ASIC diagnostic fail At Scanner diagnostic, an error has occurred at (Copy path, Scan path).

016-356:Cont video ASIC diagnostic fail. At IOT diagnostic, an error has occurred (Print path).

Possible Parts Affected

DADF ASSY PL 50.1 Item 1

IIT ASSY PL 50.1 Item 2

ESS Board PL 18.1 Item 5 (MFP), PL 18.5 Item 5 (SFP)

Initial Action

1. Power down then power up the machine to check if the error recurs GP 4 .
2. Clean the document glass and the white stripe before proceeding.

Procedure

WARNING

Ensure that the electricity to the machine is switched off while performing tasks that do not need electricity. Refer to GP 4 . Disconnect the power cord. Electricity can cause death or injury. Moving parts can cause injury.

Perform the steps that follow:

1. Check the connection at the ESS Board and the IIT ASSY, verify P/J1370, P/J1374 and P/J1372 are fully seated.
   a. Install a new IIT ASSY REP 50.1.2
2. Check the connection at the ESS Board and the DADF ASSY, verify P/J1371 and P/J1377 are fully seated.
   a. Install a new DADF ASSY REP 50.1.1.
3. Install a new ESS Board REP 18.1.5 (MFP)

016-359, 360, 361 Controller USB Fail RAP

016-359: Cont USB HUB fail. The USB HUB connection is invalid.

016-360: Cont UI fail-1. An error occurred during W/R/V test of PCI Config interval.

016-361: Cont USB 3.0 device fail. When error has occurred at W/R/V test on the internal register of the USB 3.0 Device.

Procedure

WARNING

Ensure that the electricity to the machine is switched off while performing tasks that do not need electricity. Refer to GP 4 . Disconnect the power cord. Electricity can cause death or injury. Moving parts can cause injury.

Perform the steps that follow:

1. Power down then power up the machine to check if the error recurs GP 4 .
2. Install a new ESS Board REP 18.1.5 (MFP), REP 18.5.5(SFP).

016-370 Controller Diagnostic Fail RAP

016-370 Cont rendering engine diagnosed as having a failure.

Procedure

WARNING

Ensure that the electricity to the machine is switched off while performing tasks that do not need electricity. Refer to GP 4 . Disconnect the power cord. Electricity can cause death or injury. Moving parts can cause injury.

Perform the steps that follow:

1. Power down then power up the machine, GP 4 .
2. Install a new ESS Board REP 18.1.5 (MFP), REP 18.5.5 (SFP).

016-371 Controller USB 1.1 Host Fail RAP

016-371 A defect was detected during a diagnostic check of USB 1.1 host (no communication with the FAX card could be established).

Procedure

WARNING

Ensure that the electricity to the machine is switched off while performing tasks that do not need electricity. Refer to GP 4 . Disconnect the power cord. Electricity can cause death or injury. Moving parts can cause injury.

Perform the steps that follow:

1. Power down then power up the machine, GP 4 .
2. Reload or update the Firmware, GP 9 .
3. Verify the USB Harness PL 18.1 Item 14 , is fully seated in the ESS Board PL 18.1 Item 5 .
4. Install a new USB Harness REP 18.1.14 .
5. Install a new ESS Board REP 18.1.5 (MFP only)

016-383 Controller OS Communication Fail RAP

016-383 Communication failure between linux and VX works

Procedure

WARNING

Ensure that the electricity to the machine is switched off while performing tasks that do not need electricity. Refer to GP 4 . Disconnect the power cord. Electricity can cause death or injury. Moving parts can cause injury.

Perform the steps that follow:

1. Power down then power up the machine, GP 4 .
2. Reload or update the Firmware, GP 9 .
3. Install a new ESS Board REP 18.1.5 (MFP), REP 18.5.5 (SFP).

016-400, 401, 402, 403, 406 802.1x Authentication Failure - Network1 RAP

016-400 802.1x Authentication error (incorrect user name or password). The user name or password that has been set in the machine is incorrect. The settings are different from those in the authentication device switch that is physically connected to the machine via the network.

016-401 802.1x Authentication method mismatch (the authentication server does not support the authentication method of the machine). A fail signal, which indicates that the authentication method set in the machine cannot be processed, was received from the authentication device switch that is physically connected to the machine via the network.

016-402 802.1x Authentication time-out (there was no response signal from the authentication device). The authentication was timed-out because there was no response signal from the authentication device switch that is physically connected to the machine via the network.

016-403 802.1x Authentication certificate mismatch. The root server certificate for the authentication server is not stored in the machine or it is mismatched.

016-406 [EAP-TLS] is selected as the authentication method for 802.1x authentication for Network 1, but the SSL client certificate is not set or has been deleted.

Procedure

Have the customer:

1. Enter the correct user name or password for 802.1x Authentication from the machine panel.
2. Check the switch settings and network connections of the authentication device switch that is physically connected to the machine via the network and connect it correctly.
3. Check the settings in the Authentication Device switch that is physically connected to the machine via the network.
4. **016-403** - Store the Route Certificate for the server certificate (for Network 1)of the authentication server in the machine.
5. **016-403** -If unable to Obtain the route certificate of the server certificate, disable the [Server Authentication Inspection] (for Network 1) in the 802.1x setting item of the device.
6. **016-406** - Store the client certificate to this machine SSL and set as SSL client certificate.
7. **016-406** - If the setting of SSL client certificate cannot be made, select other than [EAP-TLS] as the authentication method.

016-404 802.1x Inside Failure RAP

016-404 An internal error has occurred in the 802.1x supplicant function of the machine. An incorrect protocol signal was received from the authentication server.

Procedure

Have the customer::

1. Repeat the operation. The problem persists, pawer down then power up the machine GP 4.
2. Perform 2.6 Log RAP.

016-405 Certificate DB File Error RAP

016-405 Certificate database file is wrong.

Procedure

Have the customer start 'Initialize certificate' under Maintenance.

016-407 to 016-412 XCP Error RAP

016-407 The package management function has detected security exception.

016-408 The package management function has detected the damaged JAR file.

016-409 The package management function has detected a version mismatch.

016-410 The package management function has detected the invalid definition file.

016-411 The package management function has detected an unsupported class file version.

016-412 The package management function has detected the plug-in has caused an error that is included in a miscellaneous group of errors.

Procedure

Have the customer modify the plug-in, then re-install.

016-422, 016-423 Offline RAP

016-422 Diag Offline - When the Diag operation is in

progress, it turns Offline.

016-423 Offline

Procedure

Perform the steps that follow:

1. If a remote access session in progress, wait for it to end.
2. If the fault persists, power down then power up the machine, GP 4 .
3. Perform 2.6 Log RAP and contact Support for further Instruction.

016-424, 016-425 Power Mode RAP

016-424 Low power mode.

016-425 Sleep mode.

Procedure

Perform the steps that follow:

1. Cancel the power save mode.
2. If the fault persists, power down then power up the machine, GP 4 .
3. Perform 2.6 Log RAP and contact Support for further Instruction.

016-426 DHCP Error RAP

016-426 Low power mode.

- MFP: "Remote Services Error"
- SFP: "IP Address Failed"

Procedure

Perform the steps that follow:

1. IP Address source is set to DHCP, but Ethernet and/or wireless network connections are not set up or connected correctly, so printer is not receiving an IP address from a DHCP router.
2. If the fault persists, power down then power up the machine, GP 10.
3. Set up DHCP correctly, or set a static IP address.

016-427, 428, 429, 430, 431, 432 802.1x Failures (Network 2) RAP

016-427 802.1x Authentication failure (network 2).

016-428 802.1x Authentication method mismatch (authentication server does not support the authentication method of this device: network 2)

016-429 802.1x Authentication failure by timing out (network 2).

016-430 The route certificate of the server certificate (for network 2) of the authentication server is not stored in the machine or it does not match.

016-431 An internal error has occurred in the 802.1x supplicant function of the machine. An incorrect protocol signal was received from the authentication server in network 2.

016-432 802.1x setting error of the client certificate of the authentication (network 2).

Procedure

Have the customer:

1. Repeat the operation.
2. Set the authentication method of network 2 of this device to the same authentication method as the one set in the authentication server.
3. Check the switch setting or network connection of the [Authentication Device] which is physically network connected to Network 2 of this machine and connect it correctly.
4. **016-430** Store the Route Certificate for the server certificate (for Network 2) of the authentication server in the machine.
5. **016-430** If unable to Obtain the route certificate of the server certificate, disable the [Server Authentication Inspection] for the 802.1x setting item (Network 2) of the device.
6. **016-432** Store the client certificate to this machine SSL and set as SSL client certificate.
7. **016-432** If the setting of SSL client certificate cannot be made, select other than (EAP-TLS) as the authentication method.

016-450 SMB Host Name Duplicated RAP

016-450 A PC of the same host name exists on the network.

Procedure

Have the customer:

1. Check whether the device host name setting of the same host name is the same as another device. If the setting is duplicated, change the host name of the device or duplicate device.
2. If a duplicated setting is not confirmed, change the device host name.

016-453, 016-454 IPv6/Dynamic DNS Falure RAP

016-453 Failed to update of the IPv6 address and host name to the DNS server.

016-454 Dynamic DNS - dynamic update failed.

Procedure

Perform the steps that follow:

1. Have the customer:
   a. Check that DNS server address is set correctly in the device.
   b. Check with the System Administrator whether the DNS server settings that allow dynamic DNS using IPv6 address have been set.
2. If the fault persists, Perform 2.6 Log RAP.

016-455, 016-456 SNTP Time Out RAP

016-455 There is no response from the SNTP server within the specified time (60sec).

016-456 A standard time synchronized source message and an asynchronous message was received from the SNTP server.

Procedure

Perform the steps that follow:

1. Have the customer:
   a. Check the time on the machine, if the time on the machine is incorrect, manually set the time.
   b. Check that the SNTP server address is set correctly in the device.

016-461 Under Non-transmitted Image Log Stagnation RAP

016-461 Creation of a new job is being restricted because image logs yet to be transferred are piled up and delayed.

Procedure

Perform the steps that follow:

1. Have the customer:
   a. Check the image log management server status and the network status, and clear any cause that may impede the transfer of image logs to the image log server.
   b. Check the transfer settings and transfer all logs that are yet to be transferred. Or, change the transfer guarantee level to 'Low'.

      NOTE: *Setting the transfer guarantee level to 'Low' may cause the image logs to get deleted in sequence even before they are transferred.*
2. Obtain the log file using the log tool. Perform 2.6 Log RAP
   - If there was a reboot after the error had occurred and hence was unable to Obtain the log, set NVM (700-530) to'0' to perform log collection and return the NVM (700-530) to'1' after completing the procedure.
3. Change any possible mechanical settings for corrective actions or detection conditions and repeat the operation.
4. Check the version of Controller ROM. If it is not the latest, download and update to the latest software revision. (Refer to GP 9 Firmware Version Upgrade)
5. Turn the power off and on.Get the procedures for reproducing an error according to the operation that was performed when the error occurred.
   a. Check the exact occurrence timing during job execution.
   b. Check the job settings from the Panel.
   c. Collect other information as much as possible to reproduce the error.
6. Obtain logs immediately after the error has occurred without turning the power off and on. Perform 2.6 Log RAP, **the error persists**.
7. The ESS Board rarely fails, contact Technical Support for further instructions.

016-500 ROM Write Error (During DLD Method) RAP

016-500 An error has occurred during the process of writing data to the cont-ROM.

Procedure

WARNING

Ensure that the electricity to the machine is switched off while performing tasks that do not need electricity. Refer to GP 4 . Disconnect the power cord. Electricity can cause death or injury. Moving parts can cause injury.

Perform the steps that follow:

1. Reload or update the Firmware, GP 9 , **the error persists,**
2. Install a new ESS Board REP 18.1.5 (MFP), REP 18.5.5 (SFP).

016-503, 504, 505 SMTP Server Fail for Redirector RAP

016-503 The SMTP server name could not be resolved (though the machine tried to connect to the server).

016-504 The POP server name could not be resolved (though the machine tried to connect to the server).

016-505 Incorrect POP Server authentication information was detected.

Procedure

Request the customer specify the correct SMTP server name or specify the IP address, the error persists,

2.4.1 Interface (Physical/Logical)

1. Physical Interface Description

   The following interfaces are supported:

   a. USB

   b. Ethernet (10BaseT, 100BaseTX, 1000BASE-T) *1

   c. Wireless (optional) IEEE 802.11n/802.11g/802.11b/802.11a

   *1: Has a function to automatically detect and switch the transmission speed (10Mbps, 100Mbps, 1000Mbps). Also, the transmission speed can be fixed by settings.

2. Logical Interface Description

   a. It is possible to set whether to activate the system for each of the following logical interfaces. Default Activation: SMB (DLC), SNMP (IPX)

   Supported for receiving print jobs

   a. USB

   b. Lpd

   c. NewtWare

   d. AppleTalk (EtherTalk)

   e. SMB

   f. IPP

   g. Internet FAX Print

   h. Port9100

   i. CWSI File Upload Print

   Supported for receiving scan jobs

   a. Salutation Scan

   b. FTP Client

   c. Internet Fax Send

   d. SMB Client

   e. WebDAV Server

   Supported for management interface

   a. SNMP

   b. CWIS

   Supported for other services

   a. FTP Server

3. See **2.4.5 Network Related Details Check Flow** for further instruction as required.

016-507, 016-508 Image Log Send Fail RAP

016-507 A log image transfer fails, making it impossible to continue a target job which will consist of created images.

016-508 A log image transfer fails, making it impossible to continue an image transfer job.

Procedure

Perform the steps that follow:

1. Have the customer check the state of the destination image log control server and that of the network. Clear any factor preventing image logs from being transferred to the image log control server.

016-509, 016-510 Image Log No Send Rule RAP

016-509 Because rules for log image transfer are not registered, a job cannot be continued.

016-510 Rules for log image transfer are not registered.

Procedure

Perform the steps that follow:

1. Have the customer register rules for transfer from the destination image log control server to the device.

016-511, 016-512 Image Log Invalid Send Rule RAP

016-511 Rules for log image transfer are illegal, causing a job to be discontinued.

016-512 Rules for log image transfer are illegal.

Procedure

Perform the steps that follow:

1. Have the customer overwrite rules for transfer from the destination image log control server to the device.

016-513 SMTP Server Reception Error RAP

016-513 Error when receiving response from the SMTP server (after connecting to the server).

Procedure

Perform the steps that follow:

1. Have the customer wait 5 minutes before resubmitting the job, **the error persists,**
2. Ask the customer to consult with their Network Administrator for the correct configuration.

016-514 XPS Error RAP

016-514 During XPS Bridge processing, invalid schema, parameter error, damage to XPS file, or an error internal to XPS decomposer occurred.

Procedure

Perform the steps that follow:

1. Print from XPS Viewer, using a pinter driver (ART-EX, PCL, etc.). If the problem persists, go to the following to resolve it. The error persists, perform the following steps:
   a. Go to the section: 2.4 NET System Fault Check and perform the following in sequence,
   b. 2.4.3 No output is available, no data is printed,
   c. 2.4.4 Printing can be performed but abnormally,
   d. 2.4.5 Network-related Details Check Flow
2. Reload or update the Firmware, GP 9 , **the error persists,**
3. Perform the following steps to Obtain the log files for Support contact:
   a. Obtain the log file using the log tool. Perform 2.6 Log RAP
      - If there was a reboot after the error had occurred and hence was unable to Obtain the log, set NVM (700-530) to'0' to perform log collection and return the NVM (700-530) to'1' after completing the procedure.
   b. Change any possible mechanical settings for corrective actions or detection conditions and repeat the operation.
   c. Check the version of Controller ROM. If it is not the latest, download and update to the latest software revision. (Refer to GP 9 Firmware Version Upgrade)
   d. Turn the power off and on.Get the procedures for reproducing an error according to the operation that was performed when the error occurred.
      i. Check the exact occurrence timing during job execution.
      ii. Check the job settings from the Panel.
      iii. Collect other information as much as possible to reproduce the error.
   e. Obtain logs immediately after the error has occurred without turning the power off and on. Perform 2.6 Log RAP, **the error persists**.
   f. The ESS Board rarely fails, contact Technical Support for further instructions.

016-515 XPS Short of Memory

016-515 During XPS Bridge processing, a lack of memory was detected.

Procedure

WARNING

Ensure that the electricity to the machine is switched off while performing tasks that do not need electricity. Refer to GP 4 . Disconnect the power cord. Electricity can cause death or injury. Moving parts can cause injury.

Perform the steps that follow:

1. Have the customer check the print mode. If print mode is set to High Resolution, change it to Standard. If print mode is set to Standard, change it to High Speed.
2. If memory is still insufficient print from XPS Viewer, using a driver (ART-EX, PCL, etc.).
3. Reload or update the Firmware, GP 9 , **the error persists,**
4. Perform the following steps to Obtain the log files for Support contact:
   a. Obtain the log file using the log tool. Perform 2.6 Log RAP
      - If there was a reboot after the error had occurred and hence was unable to Obtain the log, set NVM (700-530) to'0' to perform log collection and return the NVM (700-530) to'1' after completing the procedure.
   b. Change any possible mechanical settings for corrective actions or detection conditions and repeat the operation.
   c. Check the version of Controller ROM. If it is not the latest, download and update to the latest software revision. (Refer to GP 9 Firmware Version Upgrade)
   d. Turn the power off and on.Get the procedures for reproducing an error according to the operation that was performed when the error occurred.
      i. Check the exact occurrence timing during job execution.
      ii. Check the job settings from the Panel.
      iii. Collect other information as much as possible to reproduce the error.
   e. Obtain logs immediately after the error has occurred without turning the power off and on. Perform 2.6 Log RAP, **the error persists**.
   f. The ESS Board rarely fails, contact Technical Support for further instructions.

016-516 XPS Print Ticket Description Error RAP

016-516 XPS Print Ticket description error.

Procedure

WARNING

Ensure that the electricity to the machine is switched off while performing tasks that do not need electricity. Refer to GP 10. Disconnect the power cord. Electricity can cause death or injury. Moving parts can cause injury.

Perform the steps that follow:

1. Have the customer check whether the application that sends a print job and the print instructions has a problem.
   a. If they have no problems, request the customer consult the software vendor producing the application sending the print job for assistance printing from the application, **the error persists,**
2. Obtain a list of printer settings, a job history report, and the print data with PrintTicket to send to Support and go to the following to resolve the problem,
3. Reload or update the Firmware, GP 9 , **the error persists,**
4. Perform the following steps to Obtain the log files for Support contact:
   a. Obtain the log file using the log tool. Perform 2.6 Log RAP
      - If there was a reboot after the error had occurred and hence was unable to Obtain the log, set NVM (700-530) to'0' to perform log collection and return the NVM (700-530) to'1' after completing the procedure.
   b. Change any possible mechanical settings for corrective actions or detection conditions and repeat the operation.
   c. Check the version of Controller ROM. If it is not the latest, download and update to the latest software revision. (Refer to GP 9 Firmware Version Upgrade)
   d. Turn the power off and on.Get the procedures for reproducing an error according to the operation that was performed when the error occurred.
      i. Check the exact occurrence timing during job execution.
      ii. Check the job settings from the Panel.
      iii. Collect other information as much as possible to reproduce the error.
   e. Obtain logs immediately after the error has occurred without turning the power off and on. Perform 2.6 Log RAP, **the error persists**.
   f. The ESS Board rarely fails, contact Technical Support for further instructions.

016-519 Device DV Limit Reached RAP

016-519 Number of printable sides limit full.

Procedure

Ask the System Administrator to increase the limit of printable sides.

016-522 LDAP SSL Error 112 RAP

016-522 LDAP-SSL authentication error 112 has occurred (the client certificate cannot be Obtained).

Procedure

Have the customer install the SSL client certificate into the device as the LDAP server will request it.

016-523 LDAP SSL Error 113 RAP

016-523 LDAP-SSL authentication error 112 has occurred (the client certificate cannot be Obtained).

Procedure

The device cannot trust the SSL certificate of the LDAP server. Have the customer register the root certificate of the LDAP server SSL certificate in the device.

016-524, 016-525 LDAP SSL Error 114 and 115 RAP

016-524 LDAP-SSL authentication error 114 has occurred (the server certificate is close to expiring).

016-525 LDAP-SSL authentication error 115 has occurred (the server certificate has expired).

Procedure

Have the customer change the LADP server SSL certificate to one that is valid.

016-526 LDAP SSL Error 116 RAP

016-526 LDAP-SSL authentication error 116 has occurred (the server name and the certificate does not match)

Procedure

Have the customer ensure that the address of the LDAP server set in the device matches the address of the LDAP server defined in the SSL certificate.

016-527 LDAP SSL Error 117 RAP

016-526 LDAP-SSL authentication error 116 has occurred (the server name and the certificate does not match)

Procedure

For information only, an internal error has occurred in the program.

016-529 Remote Download Server Timeout RAP

016-529 There was no response within the specified time (45 sec) when connecting to the remote download server.

Procedure

Check the network connection. Have the customer check that the remote download server is correctly configured and operating on the network.

016-533 Kerberos Attestation Protocol Error 37 RAP

016-533 A Kerberos Server Attestation protocol error has occurred. (37)

Procedure

Have the customer:

1. The clock difference between the device and the Kerberos server has exceeded the clock skew limit of the Kerberos server. Check that the clocks of the device and Kerberos server are set correctly.
2. Check that the daylight saving time and time zone settings for the device and the Kerberos server are the same.
3. Perform 2.6 Log to Obtain the logs required for contacting Support for further instruction.

016-534 Kerberos Attestation Protocol Error 41 and 42 RAP

016-534 A Kerberos Server Attestation protocol error has occurred. (41, 42)

Procedure

1. Have the customer check that the realm name and server address in the Kerberos settings of the device are set correctly.
2. Check that the Domain name and Server address in the Kerberos Settings of the device are set correctly.
   - When connected to a Microsoft Windows 2000/2003 Server, use all upper case for the Domain name.

016-535 Remote Download File Access Error RAP

016-535 There are no FW update files in the remote download server.

Procedure

Have the customer check the remote download server for the FW update file.

016-536 Host Name Solution Error in Remote Download RAP

016-536 Remote download server name resolution error.

Procedure

Have the customer check the connection to the DNS and whether the remote download server name has been registered in the DNS.

016-537 Remote Download Server Connection Error RAP

016-537 Remote download server connection error.

Procedure

Have the customer check the network connection setting (port) of the remote download server.

016-539 Kerberos Attestation Other Protocol Error RAP

016-539 A Kerberos Server Attestation protocol error has occurred.

Procedure

1. Perform 2.6 Log to Obtain the logs required for contacting Support for further instruction.

016-543, 545, 546, 548, 553, 554, 555, 556, 557, 558 Attestation Agent Error RAP

Procedure

1. 016-543 - Update the realm list, using the Update Realm button on the device, or add the domain to the ApeosWare Authentication Agent.
   a. To update the device realm information, perform the following: Press the [Authentication Agent] button on the Authentication window of the device.
   b. The Authentication Agent window appears.
   c. Press the [Update] button on the window.
   d. Perform 2.6 Log to Obtain the logs required for contacting Support for further instruction.
2. 016-545 - Match the time of the PC where the ApeosWare Authentication agent is installed in with the time of the PC where the ActiveDirectory is.
   a. Windows Time Service in the PC where the ApeosWare Authentication Agent is installed is stopped,
      i. Got to Windowas Services and start the service.
   b. Refer to the ApeosWare Authentication agent User Guide for solutions.
   c. Perform 2.6 Log to Obtain the logs required for contacting Support for further instruction.
3. 016-546 - Use correct user name..
   a. Perform 2.6 Log to Obtain the logs required for contacting Support for further instruction.
4. 016-548 - Register the device in thApeosWare Authenticatio Agent. Refer to the ApeosWare Authentica tion Agent User Guide' for solutions.
   a. Perform 2.6 Log to Obtain the logs required for contacting Support for further instruction.
5. 016-553 - The version of the ApeosWare Authentication Agent needs to be upgraded.
   a. Checkthat the machine is a product that is supported by the upgraded version of the ApeosWare Authentication Agent.
   b. Perform 2.6 Log to Obtain the logs required for contacting Support for further instruction.
6. 016-554 - Set the domain user reference login name or the reference password of the Apeo Ware Authentication Agent domain to the correct items.
   a. Perform 2.6 Log to Obtain the logs required for contacting Support for further instruction.
7. 016-555 - Check that the ApeosWare Authentication Agent can connect to the database or the Active Directory. Refer to the ApeosWare Authentication Agent User Guide for solutions.
   a. Perform 2.6 Log to Obtain the logs required for contacting Support for further instruction.
8. 016-556 - Wait 10 minutes before authenticating again as the service is overloaded.
   a. Check the ApeosWare Authentication Agent.
   b. Refer to the ApeosWare Authentication Agent User Guide for solutions.
   c. Perform 2.6 Log to Obtain the logs required for contacting Support for further instruction.
9. 016-557 - Wait 10 minutes before authenticating again as the service is overloaded.
   a. Check the ApeosWare Authentication Agent.
   b. Refer to the ApeosWare Authentication Agent User Guide for solutions.
   c. Perform 2.6 Log to Obtain the logs required for contacting Support for further instruction.
10. 016-558 - Power down then power up the machine GP 4.
    a. Perform 2.6 Log to Obtain the logs required for contacting Support for further instruction.
11. 016-569 - Power down then power up the machine GP 4.
    a. Perform 2.6 Log to Obtain the logs required for contacting Support for further instruction.

016-559 Remote Download Parameter Error RAP

016-559 When performing the remote download, an invalid value is set in the required system data.

Procedure

1. Have the customer check that all system data that must be set to perform the remote download are correct.

016-560 Attestation Agent Error 560 RAP

016-560 A communication error has occurred between the ApeosWare Authentication Agent and the machine.

Procedure

1. Check that the network cable is connected and check the settings of the Authentication Agent function.
2. If DNS address of the Server is set as the Server name/IP address of the ApeosWare Authenti ation Agent in the printer function settings list, check that DNS is enabled.

016-562 Detected User Duplication RAP

016-562 Two or more entries with the same IC card information were found in the temporary user DB of Active Directory or Authentication Agent..

Procedure

1. Have the customer make corrections so that the temporary user entries of the Active Directory or Authentication Agent do not have the same IC card information.
2. Perform 2.6 Log to Obtain the logs required for contacting Support for further instruction.

016-563 ImageLog Memory Full (Exp. Kit) RAP

016-563 When the system data 'Log/Image Creation Guarantee Level' is set to 'High', the Image Extension Kit has insufficient memory.

Procedure

1. Have the customer set the image quality to 'Normal'.
2. Perform 2.6 Log to Obtain the logs required for contacting Support for further instruction.

016-564 Remote Download Server Authentication Failed RAP

016-564 When accessing the remote download server, an authentication error notification was issued from the server.

Procedure

1. Have the customer check that the correct user name and password was specified when accessing the remote download server.
2. Perform 2.6 Log to Obtain the logs required for contacting Support for further instruction.

016-570 Job Ticket Out of Memory RAP

016-570 XPIF memory is low.

Procedure

1. Increase memory size for job ticket on UI Panel.
2. Power down then power up the machine, GP 4.
3. Run the job again.
4. Perform 2.6 Log to Obtain the logs required for contacting Support for further instruction.

016-571 Job Ticket Wrong Parameters RAP

016-571 XPIF parameter mismatch.

Procedure

Have the customer check for a mismatch between parameters specified by the job ticket. Correct the parameters, then resend the job.

016-572 Job Ticket Media Error RAP

016-572 XPIF media conversion error.

Procedure

Have the customer check that the device that receives data can print it onto paper whose properties (size/type/weight/color/punched) are specified by job ticket.

016-573 Job Ticket Parse Error RAP

016-573 XPIF Interpret error.

Procedure

Have the customer ensure the that software is correctly installed on client that generates job ticket; operational requirements are met; and software version matches device version.

016-574 FTP Host Name Solution Error RAP

016-574 Unable to resolve host name during FTP scan.

Procedure

1. Have the customer check the connection to the DNS and whether the destination server name has been registered in the DNS.
2. Perform 2.6 Log to Obtain the logs required for contacting Support for further instruction.

016-575 FTP DNS Server Error RAP

016-575 The DNS server was not set during FTP scan.

Procedure

1. Have the customer set the DNS address or set the destination server address using IP address.
2. Perform 2.6 Log to Obtain the logs required for contacting Support for further instruction.

016-576 FTP Server Connection Error RAP

016-576 Problem with connection to server during FTP scan.

Procedure

1. Have the customer check that the network communication between the transfer destination FTP server and the machine is available. For example:
2. Check that the server IP address is correct.
3. Check the connection of network cables.
4. Perform 2.6 Log to Obtain the logs required for contacting Support for further instruction.

016-577 FTP Service RAP

016-577 Failed to connect to the FTP service of the destination server.

Procedure

1. Check that the FTP service of the Server is operating.
2. Check that the FTP port number of the Server matches the FTP port number that is set on the machine.
3. Perform 2.6 Log to Obtain the logs required for contacting Support for further instruction.

016-578 FTP Login Name or Password Error RAP

016-578 FTP scan login name or password error.

Procedure

1. Check that the login name (user name) and password are correct.
2. Perform 2.6 Log to Obtain the logs required for contacting Support for further instruction.

016-579 FTP Scanning Picture Preservation Place Error RAP

016-579 Problem with scanned image storage destination of FTP scan.

Procedure

Have the customer check that the scanned image storage destination on the FTP scan server is correct.

016-580 FTP File Name Acquisition Failure RAP

016-580 Unable to Obtain file name/folder name on the FTP scan server.

Procedure

Have the customer check the access rights to the FTP scan server.

016-581 FTP File Name Suffix Limit RAP

016-581 The FTP scan file name/folder name suffix has exceeded the limit.

Procedure

Have the customer change the file name/destination folder or move or delete the files in the destination folder.

016-582, 016-588 FTP File Creation Failure RAP

016-582 When creating a file in the server after connecting to the FTP server, the file creation has failed.

016-588 Failed to write data into the server after connecting to the FTP server.

Procedure

Have the customer:

1. Check that the specified name is a file name that can be created in the storage destination.
2. Check that the storage destination has enough free space.

016-583, 016-584 FTP Folder Creation Failure RAP

016-583 When creating a lock folder in the server after connecting to the FTP server, the lock folder creation has failed.

016-584 When creating a folder in the server after connecting to the FTP server, the folder creation has failed.

Procedure

Have the customer:

1. If a lock directory (*.LCK) remains in the transfer destination, delete it then retry the job.
2. Check that the specified name is a folder name that can be created in the storage destination.
3. Check whether a folder with the same name as the specified name already exists.
4. Check that the storage destination has enough free space.
5. Perform 2.6 Log to Obtain the logs required for contacting Support for further instruction.

016-585, 587, 589 FTP File Delete/Read Failure RAP

016-585 When deleting a file in the server after connecting to the FTP server, the deletion has failed.

016-587 When deleting a folder in the server after connecting to the FTP server, the deletion has failed.

016-589 Failed to read data from the FTP server after connecting to the FTP server during scanner (save to PC) FTP transfer.

Procedure

1. Have the customer check whether there is access right to the FTP server and grant the proper rights.
2. Perform 2.6 Log to Obtain the logs required for contacting Support for further instruction.

016-586 FTP Lock Folder Delete Failure RAP

016-586 When deleting a lock folder in the server after connecting to the FTP server, the deletion has failed.

Procedure

Have the customer:

1. Check the access right to the server.
2. If a lock directory (*.LCK) remains in the transfer destination, delete it then retry the job.
3. Perform 2.6 Log to Obtain the logs required for contacting Support for further instruction.

016-590 FTP Data Reading Failure RAP

016-590 Unable to save a file after connecting to the FTP server during scanner (save to PC) FTP transfer because 'File Name Conflict' is set to 'Cancel Job'.

Procedure

1. Have the customer set 'File Name Conflict' to other than 'Cancel Job'
2. Perform 2.6 Log to Obtain the logs required for contacting Support for further instruction.

016-591 FTP Scan Filing Policy RAP

016-591 Incorrect filing policy (when additional items are selected) was detected after connecting with the FTP server.

Procedure

1. When 'Add' is selected for 'File Name Conflict', check that the file format is not set to Multi-page.
2. Perform 2.6 Log to Obtain the logs required for contacting Support for further instruction.

016-592 FTP DAT File Access Error RAP

016-592 An error has occurred when accessing the NEXTNAME.DAT file after connecting to the FTP server during scanner (Save to PC) FTP transfer.

Procedure

1. When 'Add' is selected for 'File Name Conflict', check that the NEXTNAME.DAT file is correct.
2. Perform 2.6 Log to Obtain the logs required for contacting Support for further instruction.

016-593 to 016-596 FTP Error RAP

016-593 An internal error has occurred after connecting to the FTP server.

016-594 The TYPE command has failed after connecting to the FTP server.

016-595 The PORT command has failed after connecting to the FTP server.

016-596 The CDUP command has failed after connecting to the FTP server.

Procedure

1. Repeat the operation.
2. Perform 2.6 Log to Obtain the logs required for contacting Support for further instruction.

016-597 Same File on FTP Server RAP

016-597 The process was cancelled because a file/folder with the same name was detected after connecting to the FTP server.

Procedure

1. Perform the same operation again without multiple machines accessing the same folder in the same server.
2. Perform 2.6 Log to Obtain the logs required for contacting Support for further instruction.

016-598, 016-599 Email Message Size RAP

016-598 Email message size is over spec.

016-599 Email message size is over spec.

Procedure

Procedure

1. Reduce a resolution send parameter (image-to-send quality) then resend the job.
2. Reduce a magnification send parameter, then resend the job.
3. Increase the maximum message size (10MB recommended default).
4. Perform 2.6 Log to Obtain the logs required for contacting Support for further instruction.

016-600, 601 KO Authentication Locked RAP

016-600: KO Authentication Locked - The number of incorrect Key Operator log in attempts reached the limit.

016-601: Illegal Access Detection - The number of incorrect authentication log in attempts reached the limit.

Procedure

1. 016-600 - Authentication Continuous Error Maximum Count (NVM:700-563)
2. 016-601 - Authentication Error Maximum Count (NVM:700-564)
3. If required, refer to GP 3 Customer Administration Tools, to reset password to 1111 (default) if the System Administrator ID is unavailable.

NOTE: *Default is 5 events. NVM Read/Write can be set between 1 to 10 events.*

With this feature enabled, the machine denies access when an incorrect System Administrator ID is entered the selected number of times.

016-604 Debug Log Created RAP

016-604 Debug log auto creation by system.

Primary Causes

1. When the power is turned off and a debug log is automatically created during job execution.
2. When the power is turned on and a debug log is automatically created while the power is turned off and the Power OFF Sequence is not executed.

Procedure

Perform 2.6 Log to Obtain the logs required for contacting Support for further instruction.

016-700 Password Below Minimum RAP

016-700 The number of digits used for the password for security and authentication prints is less than the minimum.

Procedure

1. Have the customer increase the number of password digits for the print job.
2. Perform 2.6 Log to Obtain the logs required for contacting Support for further instruction.

016-702 Out of Page Buffer RAP

016-702 Unable to compress any page due to insufficient print page buffer.

Procedure

Perform the steps that follow:

1. Have the customer Set [Print Mode] to [High Speed] and reduce the print resolution before retrying the operation, **the error persists,**
2. Obtain the log file using the log tool. Perform 2.6 Log RAP
   - If there was a reboot after the error had occurred and hence was unable to Obtain the log, set NVM (700-530) to'0' to perform log collection and return the NVM (700-530) to'1' after completing the procedure.
3. Change any possible mechanical settings for corrective actions or detection conditions and repeat the operation.
4. Check the version of Controller ROM. If it is not the latest, download and update to the latest software revision. (Refer to GP 9 Firmware Version Upgrade)
5. Turn the power off and on.Get the procedures for reproducing an error according to the operation that was performed when the error occurred.
   a. Check the exact occurrence timing during job execution.
   b. Check the job settings from the Panel.
   c. Collect other information as much as possible to reproduce the error.
6. Obtain logs immediately after the error has occurred without turning the power off and on. Perform 2.6 Log RAP, **the error persists**.
7. The ESS Board rarely fails, contact Technical Support for further instructions.

016-706 Maximum User Number Exceeded RAP

016-706 The system detected that a job exceeded the maximum number of users for secure and sample prints and aborted the job.

Procedure

Perform the steps that follow:

1. Have the customer delete unnecessary documents or users, then repeat the operation.
2. Obtain the log file using the log tool. Perform 2.6 Log RAP
   - If there was a reboot after the error had occurred and hence was unable to Obtain the log, set NVM (700-530) to'0' to perform log collection and return the NVM (700-530) to'1' after completing the procedure.
3. Change any possible mechanical settings for corrective actions or detection conditions and repeat the operation.
4. Check the version of Controller ROM. If it is not the latest, download and update to the latest software revision. (Refer to GP 9 Firmware Version Upgrade)
5. Turn the power off and on.Get the procedures for reproducing an error according to the operation that was performed when the error occurred.
   a. Check the exact occurrence timing during job execution.
   b. Check the job settings from the Panel.
   c. Collect other information as much as possible to reproduce the error.
6. Obtain logs immediately after the error has occurred without turning the power off and on. Perform 2.6 Log RAP, **the error persists**.
7. The ESS Board rarely fails, contact Technical Support for further instructions.

016-711 Email Transmission Size Limit RAP

016-711 The size of data to send exceeds the system data value (before connection to the server).

Procedure

Have the customer:

1. Reduce the resolution level, which is a transmission parameter, then resend the job.
2. Reduce the magnification ratio, which is a transmission parameter, then resend the job
3. Use System Settings to raise the data size upper limit (recommended default is 2MB).
4. Obtain the log file using the log tool. Perform 2.6 Log RAP
   - If there was a reboot after the error had occurred and hence was unable to Obtain the log, set NVM (700-530) to'0' to perform log collection and return the NVM (700-530) to'1' after completing the procedure.
5. Change any possible mechanical settings for corrective actions or detection conditions and repeat the operation.
6. Check the version of Controller ROM. If it is not the latest, download and update to the latest software revision. (Refer to GP 9 Firmware Version Upgrade)
7. Turn the power off and on.Get the procedures for reproducing an error according to the operation that was performed when the error occurred.
   a. Check the exact occurrence timing during job execution.
   b. Check the job settings from the Panel.
   c. Collect other information as much as possible to reproduce the error.
8. Obtain logs immediately after the error has occurred without turning the power off and on. Perform 2.6 Log RAP, **the error persists**.
9. The ESS Board rarely fails, contact Technical Support for further instructions.

016-712 Panther Capacity RAP

016-712 Capability of Panther deteriorated.

Procedure

WARNING

Ensure that the electricity to the machine is switched off while performing tasks that do not need electricity. Refer to GP 4. Disconnect the power cord. Electricity can cause death or injury. Moving parts can cause injury.

Perform the steps that follow:

1. Have the customer increase the resolution or enlarge the scan area.
2. Ensure that all connectors on the ESS PWB, PL 18.1 Item 5 (MFP) PL 18.5 Item 5 (SFP)are securely connected. Make sure all surface mounted modules are securely connected.
3. Reload or update the Firmware, GP 9, the error persists, GP 4.
4. If the fault persists, install a new ESS PWB, PL 18.1 Item 5 (MFP) PL 18.5 Item 5 (SFP).
5. Obtain the log file using the log tool. Perform 2.6 Log RAP
   - If there was a reboot after the error had occurred and hence was unable to Obtain the log, set NVM (700-530) to'0' to perform log collection and return the NVM (700-530) to'1' after completing the procedure.
6. Change any possible mechanical settings for corrective actions or detection conditions and repeat the operation.
7. Check the version of Controller ROM. If it is not the latest, download and update to the latest software revision. (Refer to GP 9 Firmware Version Upgrade)
8. Turn the power off and on.Get the procedures for reproducing an error according to the operation that was performed when the error occurred.
   a. Check the exact occurrence timing during job execution.
   b. Check the job settings from the Panel.
   c. Collect other information as much as possible to reproduce the error.
9. Obtain logs immediately after the error has occurred without turning the power off and on. Perform 2.6 Log RAP, **the error persists**.
10. The ESS Board rarely fails, contact Technical Support for further instructions.

016-713, 714 Security Box Error RAP

016-712: Security Box Password Error - the password set in the specified Mailbox and the password specified for the job do not match..

016-714: Security Box Is Not Enabled - The mailbox specified for the job does not exist.

Procedure

Perform the steps that follow:

1. Have the customer set a correct password and try again.
2. Open the appropriate mailbox and try again.
3. Reload or update the Firmware, GP 9, the error persists, GP 4.
4. Obtain the log file using the log tool. Perform 2.6 Log RAP
   - If there was a reboot after the error had occurred and hence was unable to Obtain the log, set NVM (700-530) to'0' to perform log collection and return the NVM (700-530) to'1' after completing the procedure.
5. Change any possible mechanical settings for corrective actions or detection conditions and repeat the operation.
6. Check the version of Controller ROM. If it is not the latest, download and update to the latest software revision. (Refer to GP 9 Firmware Version Upgrade)
7. Turn the power off and on.Get the procedures for reproducing an error according to the operation that was performed when the error occurred.
   a. Check the exact occurrence timing during job execution.
   b. Check the job settings from the Panel.
   c. Collect other information as much as possible to reproduce the error.
8. Obtain logs immediately after the error has occurred without turning the power off and on. Perform 2.6 Log RAP, **the error persists**.
9. The ESS Board rarely fails, contact Technical Support for further instructions.

016-715 ESCP Form Invalid Password RAP

016-715 Unable to access the ESCP form because ESCP form password did not match

Procedure

WARNING

Ensure that the electricity to the machine is switched off while performing tasks that do not need electricity. Refer to GP 4. Disconnect the power cord. Electricity can cause death or injury. Moving parts can cause injury.

Perform the steps that follow:

1. Have the customer input the correct password to use ESCP form.
2. Ensure that all connectors on the ESS PWB, PL 18.1 Item 5 (MFP) PL 18.5 Item 5 (SFP) are securely connected. Make sure all surface mounted modules are securely connected.
3. Reload or update the Firmware, GP 9 the error persists,GP 4.
4. Obtain the log file using the log tool. Perform 2.6 Log RAP
   - If there was a reboot after the error had occurred and hence was unable to Obtain the log, set NVM (700-530) to'0' to perform log collection and return the NVM (700-530) to'1' after completing the procedure.
5. Change any possible mechanical settings for corrective actions or detection conditions and repeat the operation.
6. Check the version of Controller ROM. If it is not the latest, download and update to the latest software revision. (Refer to GP 9 Firmware Version Upgrade)
7. Turn the power off and on.Get the procedures for reproducing an error according to the operation that was performed when the error occurred.
   a. Check the exact occurrence timing during job execution.
   b. Check the job settings from the Panel.
   c. Collect other information as much as possible to reproduce the error.
8. Obtain logs immediately after the error has occurred without turning the power off and on. Perform 2.6 Log RAP, **the error persists**.
9. The ESS Board rarely fails, contact Technical Support for further instructions.

016-718 Out of PCL6 Memory RAP

016-718 Insufficient PCL6 decomposer memory.

Procedure

Perform the steps that follow:

1. Have the customer decrease the resolution to reduce the PLW memory.
2. Reload or update the Firmware, GP 9, GP 4.
3. Obtain the log file using the log tool. Perform 2.6 Log RAP
   - If there was a reboot after the error had occurred and hence was unable to Obtain the log, set NVM (700-530) to'0' to perform log collection and return the NVM (700-530) to'1' after completing the procedure.
4. Change any possible mechanical settings for corrective actions or detection conditions and repeat the operation.
5. Check the version of Controller ROM. If it is not the latest, download and update to the latest software revision. (Refer to GP 9 Firmware Version Upgrade)
6. Turn the power off and on.Get the procedures for reproducing an error according to the operation that was performed when the error occurred.
   a. Check the exact occurrence timing during job execution.
   b. Check the job settings from the Panel.
   c. Collect other information as much as possible to reproduce the error.
7. Obtain logs immediately after the error has occurred without turning the power off and on. Perform 2.6 Log RAP, **the error persists**.
8. The ESS Board rarely fails, contact Technical Support for further instructions.

016-719 Out of PCL Memory RAP

016-719 An insufficient memory was detected while using the PCL.

Procedure

Perform the steps that follow:

1. Have the customer increase the PCL memory size. Increasing the memory for the whole system will increase the memory to be allocated to the Decomposer in some measure.
2. Reload or update the Firmware, GP 9, GP 4.
3. Obtain the log file using the log tool. Perform 2.6 Log RAP
   - If there was a reboot after the error had occurred and hence was unable to Obtain the log, set NVM (700-530) to'0' to perform log collection and return the NVM (700-530) to'1' after completing the procedure.
4. Change any possible mechanical settings for corrective actions or detection conditions and repeat the operation.
5. Check the version of Controller ROM. If it is not the latest, download and update to the latest software revision. (Refer to GP 9 Firmware Version Upgrade)
6. Turn the power off and on.Get the procedures for reproducing an error according to the operation that was performed when the error occurred.
   a. Check the exact occurrence timing during job execution.
   b. Check the job settings from the Panel.
   c. Collect other information as much as possible to reproduce the error.
7. Obtain logs immediately after the error has occurred without turning the power off and on. Perform 2.6 Log RAP, **the error persists**.
8. The ESS Board rarely fails, contact Technical Support for further instructions.

016-720 PCL Command Error RAP

016-720 A PCL command error occurred during PCL processing.

Procedure

Perform the steps that follow:

1. Have the customer cancel the job then execute the command again.
2. Reload or update the Firmware, GP 9, GP 4.
3. Obtain the log file using the log tool. Perform 2.6 Log RAP
   - If there was a reboot after the error had occurred and hence was unable to Obtain the log, set NVM (700-530) to'0' to perform log collection and return the NVM (700-530) to'1' after completing the procedure.
4. Change any possible mechanical settings for corrective actions or detection conditions and repeat the operation.
5. Check the version of Controller ROM. If it is not the latest, download and update to the latest software revision. (Refer to GP 9 Firmware Version Upgrade)
6. Turn the power off and on.Get the procedures for reproducing an error according to the operation that was performed when the error occurred.
   a. Check the exact occurrence timing during job execution.
   b. Check the job settings from the Panel.
   c. Collect other information as much as possible to reproduce the error.
7. Obtain logs immediately after the error has occurred without turning the power off and on. Perform 2.6 Log RAP, **the error persists**.
8. The ESS Board rarely fails, contact Technical Support for further instructions.

016-721 Settings Error RAP

016-721 Paper types cannot be determined because all the settings for custom paper priority are set to disabled.

Procedure

Perform the steps that follow:

1. Have the customer correct the settings, then execute the command again.
2. Reload or update the Firmware, GP 9, GP 4.
3. Obtain the log file using the log tool. Perform 2.6 Log RAP
   - If there was a reboot after the error had occurred and hence was unable to Obtain the log, set NVM (700-530) to'0' to perform log collection and return the NVM (700-530) to'1' after completing the procedure.
4. Change any possible mechanical settings for corrective actions or detection conditions and repeat the operation.
5. Check the version of Controller ROM. If it is not the latest, download and update to the latest software revision. (Refer to GP 9 Firmware Version Upgrade)
6. Turn the power off and on.Get the procedures for reproducing an error according to the operation that was performed when the error occurred.
   a. Check the exact occurrence timing during job execution.
   b. Check the job settings from the Panel.
   c. Collect other information as much as possible to reproduce the error.
7. Obtain logs immediately after the error has occurred without turning the power off and on. Perform 2.6 Log RAP, **the error persists**.
8. The ESS Board rarely fails, contact Technical Support for further instructions.

016-725 B-Formatter Library Image Conversion Error RAP

016-725 An error has occurred in the B-Formatter during the image conversion of scanned document to FAX sending document.

Procedure

Perform the steps that follow:

1. Have the customer directly scan the document and send it to the FAX recipient.
2. Reload or update the Firmware, GP 9, GP 4.
3. Obtain the log file using the log tool. Perform 2.6 Log RAP
   - If there was a reboot after the error had occurred and hence was unable to Obtain the log, set NVM (700-530) to'0' to perform log collection and return the NVM (700-530) to'1' after completing the procedure.
4. Change any possible mechanical settings for corrective actions or detection conditions and repeat the operation.
5. Check the version of Controller ROM. If it is not the latest, download and update to the latest software revision. (Refer to GP 9 Firmware Version Upgrade)
6. Turn the power off and on.Get the procedures for reproducing an error according to the operation that was performed when the error occurred.
   a. Check the exact occurrence timing during job execution.
   b. Check the job settings from the Panel.
   c. Collect other information as much as possible to reproduce the error.
7. Obtain logs immediately after the error has occurred without turning the power off and on. Perform 2.6 Log RAP, **the error persists**.
8. The ESS Board rarely fails, contact Technical Support for further instructions.

016-726 PDL Auto Switch Fail RAP

016-726 Print language auto judgment fail.

Procedure

Perform the steps that follow:

1. Have the customer fix, then select the decomposer from the UI or with a command.
2. Reload or update the Firmware, GP 9, GP 4.
3. Obtain the log file using the log tool. Perform 2.6 Log RAP
   - If there was a reboot after the error had occurred and hence was unable to Obtain the log, set NVM (700-530) to'0' to perform log collection and return the NVM (700-530) to'1' after completing the procedure.
4. Change any possible mechanical settings for corrective actions or detection conditions and repeat the operation.
5. Check the version of Controller ROM. If it is not the latest, download and update to the latest software revision. (Refer to GP 9 Firmware Version Upgrade)
6. Turn the power off and on.Get the procedures for reproducing an error according to the operation that was performed when the error occurred.
   a. Check the exact occurrence timing during job execution.
   b. Check the job settings from the Panel.
   c. Collect other information as much as possible to reproduce the error.
7. Obtain logs immediately after the error has occurred without turning the power off and on. Perform 2.6 Log RAP, **the error persists**.
8. The ESS Board rarely fails, contact Technical Support for further instructions.

016-728 Unsupported TIFF Data RAP

016-728 Unsupported TIFF data.

Procedure

For information only, no service action necessary. Refer the customer to the User Guide.

016-729 TIFF Data Size RAP

016-720 The files to be spooled in the TIFF exceeded the disk capacity.

Procedure

Perform the steps that follow:

1. Have the customer refer to the User Guide to correct the valid range.
2. Reload or update the Firmware, GP 9, GP 4.
3. Obtain the log file using the log tool. Perform 2.6 Log RAP
   - If there was a reboot after the error had occurred and hence was unable to Obtain the log, set NVM (700-530) to'0' to perform log collection and return the NVM (700-530) to'1' after completing the procedure.
4. Change any possible mechanical settings for corrective actions or detection conditions and repeat the operation.
5. Check the version of Controller ROM. If it is not the latest, download and update to the latest software revision. (Refer to GP 9 Firmware Version Upgrade)
6. Turn the power off and on.Get the procedures for reproducing an error according to the operation that was performed when the error occurred.
   a. Check the exact occurrence timing during job execution.
   b. Check the job settings from the Panel.
   c. Collect other information as much as possible to reproduce the error.
7. Obtain logs immediately after the error has occurred without turning the power off and on. Perform 2.6 Log RAP, **the error persists**.
8. The ESS Board rarely fails, contact Technical Support for further instructions.

016-731, 016-732 Invalid Data RAP

016-731 The TIFF data is broken or discontinued halfway.

016-732 The decomposer detected that the form specified is not registered.

Procedure

Perform the steps that follow:

1. Have the customer resend the data or form data.
2. Reload or update the Firmware, GP 9, GP 4.
3. Obtain the log file using the log tool. Perform 2.6 Log RAP
   - If there was a reboot after the error had occurred and hence was unable to Obtain the log, set NVM (700-530) to'0' to perform log collection and return the NVM (700-530) to'1' after completing the procedure.
4. Change any possible mechanical settings for corrective actions or detection conditions and repeat the operation.
5. Check the version of Controller ROM. If it is not the latest, download and update to the latest software revision. (Refer to GP 9 Firmware Version Upgrade)
6. Turn the power off and on.Get the procedures for reproducing an error according to the operation that was performed when the error occurred.
   a. Check the exact occurrence timing during job execution.
   b. Check the job settings from the Panel.
   c. Collect other information as much as possible to reproduce the error.
7. Obtain logs immediately after the error has occurred without turning the power off and on. Perform 2.6 Log RAP, **the error persists**.
8. The ESS Board rarely fails, contact Technical Support for further instructions.

016-733 Destination Address Resolution Error RAP

016-733 A failure to resolve a P2P address problem (before connection to the server).

Procedure

Perform the steps that follow:

1. Have the customer:
   a. Check if the destination address has been entered correctly.
   b. Set a correct DNS server address.
2. Reload or update the Firmware, GP 9, the error persists, GP 4.
3. Obtain the log file using the log tool. Perform 2.6 Log RAP
   - If there was a reboot after the error had occurred and hence was unable to Obtain the log, set NVM (700-530) to'0' to perform log collection and return the NVM (700-530) to'1' after completing the procedure.
4. Change any possible mechanical settings for corrective actions or detection conditions and repeat the operation.
5. Check the version of Controller ROM. If it is not the latest, download and update to the latest software revision. (Refer to GP 9 Firmware Version Upgrade)
6. Turn the power off and on.Get the procedures for reproducing an error according to the operation that was performed when the error occurred.
   a. Check the exact occurrence timing during job execution.
   b. Check the job settings from the Panel.
   c. Collect other information as much as possible to reproduce the error.
7. Obtain logs immediately after the error has occurred without turning the power off and on. Perform 2.6 Log RAP, **the error persists**.
8. Refer to procedure 2.4 NET System Fault Check

016-735 Updating Job Template RAP

016-735 The system attempted to output the job template list while the job template was being updated.

Procedure

Perform the steps that follow:

1. Have the customer perform the operation again after the Job Template update completes.
2. Reload or update the Firmware, GP 9.
3. Obtain the log file using the log tool. Perform 2.6 Log RAP
   - If there was a reboot after the error had occurred and hence was unable to Obtain the log, set NVM (700-530) to'0' to perform log collection and return the NVM (700-530) to'1' after completing the procedure.
4. Change any possible mechanical settings for corrective actions or detection conditions and repeat the operation.
5. Check the version of Controller ROM. If it is not the latest, download and update to the latest software revision. (Refer to GP 9 Firmware Version Upgrade)
6. Turn the power off and on.Get the procedures for reproducing an error according to the operation that was performed when the error occurred.
   a. Check the exact occurrence timing during job execution.
   b. Check the job settings from the Panel.
   c. Collect other information as much as possible to reproduce the error.
7. Obtain logs immediately after the error has occurred without turning the power off and on. Perform 2.6 Log RAP, **the error persists**.
8. The ESS Board rarely fails, contact Technical Support for further instructions.

016-741 Download Mode Fail RAP

016-741 Not able to change into download mode.

Procedure

Perform the steps that follow:

1. Have the customer cancel the download prohibited mode then check that the jobs have completed before retrying the operation.
2. Check that the 'Communicating' LED is off.
3. After completing a panel operation, wait for 1 minute or longer before starting the download operation.
4. Enter dC131. Set NVM value 700-420 to 0, the retry the operation.
5. Perform 2.6 Log to Obtain the logs required for contacting Support for further instruction.

016-742 Download Data Product ID Mismatch RAP

016-742 A mismatch in the product ID of download data was detected.

Procedure

Perform the steps that follow:

1. Have the customer Obtain the download data again, then retry the job.
2. Perform 2.6 Log to Obtain the logs required for contacting Support for further instruction.

016-743 Device Model/Panel Type Error RAP

016-743 The supported model in the download data does not match the device model.

Procedure

Have the customer source a download file that has the same model with the device VerUP then retry the job.

016-744 Download Data CheckSum Error RAP

016-744 CheckSum error of download data.

Procedure

Perform the steps that follow:

1. Ensure that the cable connected to the device is secured correctly, then retry the job.

016-745 Download Data XPJL Fatal Error RAP

016-744 XPJL fatal error during download.

Procedure

Procedure

Perform the steps that follow:

1. Have the customer Obtain the download data again, then retry the job.
2. Power down then power up the machine, GP 10.
3. Perform 2.6 Log to Obtain the logs required for contacting Support for further instruction.

016-746, 016-751 Unsupported PDF File RAP

016-746 There was transparency or JBIG2 in a PDF 1.3 file.

016-751 Syntax error, usage of undefined command, parameter error, damaged PDF file, internal error of the PDF decomposer has occurred during PDF bridge process.

Procedure

Perform the steps that follow:

1. Have the customer print via the driver from Acrobat Reader.
2. Reload or update the Firmware, GP 9.
3. Obtain the log file using the log tool. Perform 2.6 Log RAP
   - If there was a reboot after the error had occurred and hence was unable to Obtain the log, set NVM (700-530) to'0' to perform log collection and return the NVM (700-530) to'1' after completing the procedure.
4. Change any possible mechanical settings for corrective actions or detection conditions and repeat the operation.
5. Check the version of Controller ROM. If it is not the latest, download and update to the latest software revision. (Refer to GP 9 Firmware Version Upgrade)
6. Turn the power off and on.Get the procedures for reproducing an error according to the operation that was performed when the error occurred.
   a. Check the exact occurrence timing during job execution.
   b. Check the job settings from the Panel.
   c. Collect other information as much as possible to reproduce the error.
7. Obtain logs immediately after the error has occurred without turning the power off and on. Perform 2.6 Log RAP, **the error persists**.
8. The ESS Board rarely fails, contact Technical Support for further instructions.

016-747 Drawing Annotation Memory RAP

016-747 When drawing an annotation image with the copy repeat function specified, there would be insufficient memory.

Procedure

Perform the steps that follow:

1. Have the customer:
   a. Increase the annotation image size.
   b. Reduce the number of repeat images for the repeat function.
2. If the fault persists, Reload or update the Firmware, GP 9.
3. Perform 2.6 Log to Obtain the logs required for contacting Support for further instruction.

016-749 JCL Syntax Error RAP

016-749 The PJL/XPJL detected a print language that cannot be printed.

Procedure

Perform the steps that follow:

1. Have the customer:
   a. Use the printer driver of the machine to print.
   b. Not use ContentsBridge to print a PDF file.
   c. Request the other party to resend the internet FAX document using a print language that can be printed by the machine.
2. Reload or update the Firmware, GP 9.
3. Refer to 2.4 NET System Fault Check for NET related troubleshooting.

016-750 Print Job Ticket Description Error RAP

016-750 When the customer uses applications such as 'ContentsBridge2005', etc. to send PDF directly, the machine received the print job ticket that was sent together with the PDF. However, the print job ticket data has text that is not supported in this machine or print instruction that is not supported by the machine.

Procedure

Perform the steps that follow:

1. Have the customer refer to the user Guide.
2. Reload or update the Firmware, GP 9.
3. Obtain the log file using the log tool. Perform 2.6 Log RAP
   - If there was a reboot after the error had occurred and hence was unable to Obtain the log, set NVM (700-530) to'0' to perform log collection and return the NVM (700-530) to'1' after completing the procedure.
4. Change any possible mechanical settings for corrective actions or detection conditions and repeat the operation.
5. Check the version of Controller ROM. If it is not the latest, download and update to the latest software revision. (Refer to GP 9 Firmware Version Upgrade)
6. Turn the power off and on.Get the procedures for reproducing an error according to the operation that was performed when the error occurred.
   a. Check the exact occurrence timing during job execution.
   b. Check the job settings from the Panel.
   c. Collect other information as much as possible to reproduce the error.
7. Obtain logs immediately after the error has occurred without turning the power off and on. Perform 2.6 Log RAP, **the error persists**.
8. The ESS Board rarely fails, contact Technical Support for further instructions.

016-752 PDF Short of Memory RAP

016-752 Insufficient memory was detected during PDF bridge processing.

Procedure

Perform the steps that follow:

1. Have the customer:
   a. Change the print mode. When the print mode is set to High Quality, change the setting to Normal. When the print mode is set to Standard, change the setting to High Speed.
   b. Print using a driver from Acrobat Reader.
2. Reload or update the Firmware, GP 9.
3. Obtain the log file using the log tool. Perform 2.6 Log RAP
   - If there was a reboot after the error had occurred and hence was unable to Obtain the log, set NVM (700-530) to'0' to perform log collection and return the NVM (700-530) to'1' after completing the procedure.
4. Change any possible mechanical settings for corrective actions or detection conditions and repeat the operation.
5. Check the version of Controller ROM. If it is not the latest, download and update to the latest software revision. (Refer to GP 9 Firmware Version Upgrade)
6. Turn the power off and on.Get the procedures for reproducing an error according to the operation that was performed when the error occurred.
   a. Check the exact occurrence timing during job execution.
   b. Check the job settings from the Panel.
   c. Collect other information as much as possible to reproduce the error.
7. Obtain logs immediately after the error has occurred without turning the power off and on. Perform 2.6 Log RAP, **the error persists**.
8. The ESS Board rarely fails, contact Technical Support for further instructions.

016-753 PDF Password Mismatched RAP

016-753 When processing a PDF file that is protected by a password, the password in the UI panel settings and the password specified using XPJL (set in the contents bridge utility) do not match.

Procedure

Perform the steps that follow:

1. Have the customer specify the correct password using the UI or the contents bridge.
2. Reload or update the Firmware, GP 9.
3. Obtain the log file using the log tool. Perform 2.6 Log RAP
   - If there was a reboot after the error had occurred and hence was unable to Obtain the log, set NVM (700-530) to'0' to perform log collection and return the NVM (700-530) to'1' after completing the procedure.
4. Change any possible mechanical settings for corrective actions or detection conditions and repeat the operation.
5. Check the version of Controller ROM. If it is not the latest, download and update to the latest software revision. (Refer to GP 9 Firmware Version Upgrade)
6. Turn the power off and on.Get the procedures for reproducing an error according to the operation that was performed when the error occurred.
   a. Check the exact occurrence timing during job execution.
   b. Check the job settings from the Panel.
   c. Collect other information as much as possible to reproduce the error.
7. Obtain logs immediately after the error has occurred without turning the power off and on. Perform 2.6 Log RAP, **the error persists**.
8. The ESS Board rarely fails, contact Technical Support for further instructions.

016-755 PDF Print Prohibited RAP

016-755 The system processed a PDF file prohibited for printing.

Procedure

Perform the steps that follow:

1. Have the customer use Acrobat to clear the print prohibition setting then print the PDF file.
2. Reload or update the Firmware, GP 9.
3. Obtain the log file using the log tool. Perform 2.6 Log RAP
   - If there was a reboot after the error had occurred and hence was unable to Obtain the log, set NVM (700-530) to'0' to perform log collection and return the NVM (700-530) to'1' after completing the procedure.
4. Change any possible mechanical settings for corrective actions or detection conditions and repeat the operation.
5. Check the version of Controller ROM. If it is not the latest, download and update to the latest software revision. (Refer to GP 9 Firmware Version Upgrade)
6. Turn the power off and on.Get the procedures for reproducing an error according to the operation that was performed when the error occurred.
   a. Check the exact occurrence timing during job execution.
   b. Check the job settings from the Panel.
   c. Collect other information as much as possible to reproduce the error.
7. Obtain logs immediately after the error has occurred without turning the power off and on. Perform 2.6 Log RAP, **the error persists**.
8. The ESS Board rarely fails, contact Technical Support for further instructions.

016-756 Auditron-Prohibit Service RAP

016-756 Auditron - Prohibit Service

016-757 Auditron - Invalid User

016-758 Auditron - Disabled Function

016-759 Auditron - Reached Limit

Procedure

1st Action - Individual Error

1. **016-756** - Request the Account Administrator for access to use the service.
2. 016-757 - Set the correct account and redo the last operation creating the error.
3. 016-758
   a. Set the new function that is allowed for that account and try again.
   b. Request the Account Administrator to add the rights.
4. 016-759 - Request the Account Administrator to set the number of copies, etc.

2nd Action - All

1. Reload or update the Firmware, GP 9.
2. Obtain the log file using the log tool. Perform 2.6 Log RAP
   - If there was a reboot after the error had occurred and hence was unable to Obtain the log, set NVM (700-530) to'0' to perform log collection and return the NVM (700-530) to'1' after completing the procedure.
3. Change any possible mechanical settings for corrective actions or detection conditions and repeat the operation.
4. Check the version of Controller ROM. If it is not the latest, download and update to the latest software revision. (Refer to GP 9 Firmware Version Upgrade)
5. Turn the power off and on.Get the procedures for reproducing an error according to the operation that was performed when the error occurred.
   a. Check the exact occurrence timing during job execution.
   b. Check the job settings from the Panel.
   c. Collect other information as much as possible to reproduce the error.
6. Obtain logs immediately after the error has occurred without turning the power off and on. Perform 2.6 Log RAP, **the error persists**.
7. The ESS Board rarely fails, contact Technical Support for further instructions.

016-760 PS Decompose Failure RAP

016-760 An error occurred in decompose processing.

Procedure

Perform the steps that follow:

1. Have the customer resend the job.
2. Reload or update the Firmware, GP 9.
3. Obtain the log file using the log tool. Perform 2.6 Log RAP
   - If there was a reboot after the error had occurred and hence was unable to Obtain the log, set NVM (700-530) to'0' to perform log collection and return the NVM (700-530) to'1' after completing the procedure.
4. Change any possible mechanical settings for corrective actions or detection conditions and repeat the operation.
5. Check the version of Controller ROM. If it is not the latest, download and update to the latest software revision. (Refer to GP 9 Firmware Version Upgrade)
6. Turn the power off and on.Get the procedures for reproducing an error according to the operation that was performed when the error occurred.
   a. Check the exact occurrence timing during job execution.
   b. Check the job settings from the Panel.
   c. Collect other information as much as possible to reproduce the error.
7. Obtain logs immediately after the error has occurred without turning the power off and on. Perform 2.6 Log RAP, **the error persists**.
8. The ESS Board rarely fails, contact Technical Support for further instructions.

016-761 FIFO Empty RAP

016-761 Image enlargement error (FIFO empty).

Procedure

Perform the steps that follow:

1. Have the customer print in the high speed mode. If the fault persists, use print guaranteed mode.
2. Reload or update the Firmware, GP 9.
3. Obtain the log file using the log tool. Perform 2.6 Log RAP
   - If there was a reboot after the error had occurred and hence was unable to Obtain the log, set NVM (700-530) to'0' to perform log collection and return the NVM (700-530) to'1' after completing the procedure.
4. Change any possible mechanical settings for corrective actions or detection conditions and repeat the operation.
5. Check the version of Controller ROM. If it is not the latest, download and update to the latest software revision. (Refer to GP 9 Firmware Version Upgrade)
6. Turn the power off and on.Get the procedures for reproducing an error according to the operation that was performed when the error occurred.
   a. Check the exact occurrence timing during job execution.
   b. Check the job settings from the Panel.
   c. Collect other information as much as possible to reproduce the error.
7. Obtain logs immediately after the error has occurred without turning the power off and on. Perform 2.6 Log RAP, **the error persists**.
8. The ESS Board rarely fails, contact Technical Support for further instructions.

016-762 Print Language Not Installed RAP

016-762 The system requested functions (print language, print utility, etc.) that are not installed.

Procedure

Perform the steps that follow:

1. Have the customer correct then select the decomposer from the UI or with a command.
2. Reload or update the Firmware, GP 9.
3. Obtain the log file using the log tool. Perform 2.6 Log RAP
   - If there was a reboot after the error had occurred and hence was unable to Obtain the log, set NVM (700-530) to'0' to perform log collection and return the NVM (700-530) to'1' after completing the procedure.
4. Change any possible mechanical settings for corrective actions or detection conditions and repeat the operation.
5. Check the version of Controller ROM. If it is not the latest, download and update to the latest software revision. (Refer to GP 9 Firmware Version Upgrade)
6. Turn the power off and on.Get the procedures for reproducing an error according to the operation that was performed when the error occurred.
   a. Check the exact occurrence timing during job execution.
   b. Check the job settings from the Panel.
   c. Collect other information as much as possible to reproduce the error.
7. Obtain logs immediately after the error has occurred without turning the power off and on. Perform 2.6 Log RAP, **the error persists**.
8. The ESS Board rarely fails, contact Technical Support for further instructions.

016-763 POP Server Connect RAP

016-763 The machine cannot connect to the POP server.

Procedure

Have the customer:

1. Verify the network cable is connected.
2. Confirm that the POP3 server settings are correct.
3. Enter the IP Address of their POP3 server into the machine.

016-764 SMTP Server Connect RAP

016-764 The machine failed to connect to the SMTP server.

Procedure

Have the customer:

1. Print a configuration report and confirm that the DNS settings are correct.
2. Confirm that the SMTP server settings are correct.
3. Enter the IP Address of their SMTP server into the machine.
4. If the fault persists, refer the customer to the System Administrator Guide to check that the machine is correctly configured.

016-765, 016-766 SMTP Server Error RAP

016-765 The SMTP server HDD is full.

016-766 The memory capacity allocated by the SMTP server is exceeded.

Procedure

Have the customer:

1. Request the customer contact the SMTP Server Administrator.
2. Retrieve E-mails in the SMTP Server HD.
3. Check the server capacity.

016-767 Invalid Email Address RAP

016-767 The system detected that the E-mail destination address is incorrect.

Procedure

Perform the steps that follow:

1. Have the customer check a specific mail addressor set a correct address.
2. Reload or update the Firmware, GP 9.
3. Refer to 2.4 NET System Fault Check to resolve the issue.

016-768 Invalid Sender Address RAP

016-768 The SMTP server refused to accept the sender address.

Procedure

Have the customer check that the sender address is correct.

016-769 SMTP Server Unsupported DSN RAP

016-769 The SMTP server refused to accept the sender address.

Procedure

Have the customer contact the network administrator for advice and ensure that the SMTP server supports DSN.

016-770 Direct FAX Function Canceled RAP

016-770 The SMTP server refused to accept the sender address.

Procedure

1. Have the customer release the direct FAX job prohibition (set the target system to 0).
2. Obtain the job logs (UI, Report, CWIS, SSMI applications).

016-772 Scan Data Repository Error RAP

016-772 An error occurred while recalling the DNS resolution library.

Procedure

Perform the steps that follow:

1. Have the customer set the DNS address. Or, set the scan data repository address using IP address.
2. Reload or update the Firmware, GP 9.
3. Refer to 2.4 NET System Fault Check to resolve the issue.

016-776 Image Conversion Error RAP

016-776 Error due during image conversion processing by S-formatter.

Procedure

Perform the steps that follow:

1. Have the customer:
   a. If a failure occurred during Salutation/FAX to Email, attempt to retrieve each page from the mailbox via the web browser.
   b. For occurrences when the password, or signature is specified by the Digital Certificate, perform the steps that follow.
      - Check the validity of the certificate.
      - Set the correct date and time of the device.
   c. When scanning is done with the TWAIN driver, change the file format to JFIF, single-page TIFF.
   d. Switch off FIPS mode, or remove PDF encryption setting in the instructions document.
   e. Set to Single File for Each Page, or set the Image Format setting to Drawing Object.
2. Reload or update the Firmware, GP 9.
3. Refer to 2.4 NET System Fault Check to resolve the issue.

016-779 Scan Image Conversion Error RAP

016-779 An error was detected in the Image conversion library.

Procedure

Perform the steps that follow:

1. Have the customer:
   a. Repeat the operation.
   b. Reduce the scan resolution to 400dpi or less then repeat the operation.
2. Reload or update the Firmware, GP 9.
3. Obtain the log file using the log tool. Perform 2.6 Log RAP
   - If there was a reboot after the error had occurred and hence was unable to Obtain the log, set NVM (700-530) to'0' to perform log collection and return the NVM (700-530) to'1' after completing the procedure.
4. Change any possible mechanical settings for corrective actions or detection conditions and repeat the operation.
5. Check the version of Controller ROM. If it is not the latest, download and update to the latest software revision. (Refer to GP 9 Firmware Version Upgrade)
6. Turn the power off and on.Get the procedures for reproducing an error according to the operation that was performed when the error occurred.
   a. Check the exact occurrence timing during job execution.
   b. Check the job settings from the Panel.
   c. Collect other information as much as possible to reproduce the error.
7. Obtain logs immediately after the error has occurred without turning the power off and on. Perform 2.6 Log RAP, **the error persists**.
8. The ESS Board rarely fails, contact Technical Support for further instructions.

016-781 Server Connect Error RAP

016-781 SMTP server not found.

Procedure

Perform the steps that follow:

1. Have the customer:
   a. Correctly set the subnet mask and gateway.
   b. From the destination server, ping the machine.
   c. Check whether characters other than ASCII are set for the host name of the device. Set the host name of the device to ASCII characters.
2. Reload or update the Firmware, GP 9.
3. Refer to 2.4 NET System Fault Check to resolve the issue.

016-788 Retrieve to Browser Failed RAP

016-788 SMTP server not found.

Procedure

Perform the steps that follow:

1. Power down then power up the machine, GP 10.
2. Have the customer:
   a. Reload the browser page then perform retrieval operation again.
   b. Re-activate the browser, then perform retrieval operation again.
   c. Improve the connection status to a network.
   d. Check whether there are problems such as duplicated IP addresses.
3. Reload or update the Firmware, GP 9.
4. Refer to 2.4 NET System Fault Check to resolve the issue.

016-790 Email Fragment Over RAP

016-790 Email fragment quantity is over spec.

Procedure

Perform the steps that follow:

1. Have the customer:
   a. Reduce resolution (image to send quality), then resend the job.
   b. Reduce magnification, then resend the job.
   c. Increase the maximum fragment quantity.
2. Obtain logs immediately after the error has occurred without turning the power off and on. Perform 2.6 Log RAP.
3. Contact Technical Support for further instructions.

016-792 Specified Job Not Found RAP

016-792 An error was detected in the Image conversion library.

Procedure

Perform the steps that follow:

1. Have the customer repeat the operation.
2. Reload or update the Firmware, GP 9.
3. Obtain the log file using the log tool. Perform 2.6 Log RAP
   - If there was a reboot after the error had occurred and hence was unable to Obtain the log, set NVM (700-530) to'0' to perform log collection and return the NVM (700-530) to'1' after completing the procedure.
4. Change any possible mechanical settings for corrective actions or detection conditions and repeat the operation.
5. Check the version of Controller ROM. If it is not the latest, download and update to the latest software revision. (Refer to GP 9 Firmware Version Upgrade)
6. Turn the power off and on.Get the procedures for reproducing an error according to the operation that was performed when the error occurred.
   a. Check the exact occurrence timing during job execution.
   b. Check the job settings from the Panel.
   c. Collect other information as much as possible to reproduce the error.
7. Obtain logs immediately after the error has occurred without turning the power off and on. Perform 2.6 Log RAP.
8. The ESS Board rarely fails, contact Technical Support for further instructions.

016-794 Media Not Inserted RAP

016-794 Media not inserted.

Procedure

Perform the steps that follow:

1. Have the customer check that the media is inserted.
2. Reload or update the Firmware, GP 9.
3. Obtain the log file using the log tool. Perform 2.6 Log RAP
   - If there was a reboot after the error had occurred and hence was unable to Obtain the log, set NVM (700-530) to'0' to perform log collection and return the NVM (700-530) to'1' after completing the procedure.
4. Change any possible mechanical settings for corrective actions or detection conditions and repeat the operation.
5. Check the version of Controller ROM. If it is not the latest, download and update to the latest software revision. (Refer to GP 9 Firmware Version Upgrade)
6. Turn the power off and on.Get the procedures for reproducing an error according to the operation that was performed when the error occurred.
   a. Check the exact occurrence timing during job execution.
   b. Check the job settings from the Panel.
   c. Collect other information as much as possible to reproduce the error.
7. Obtain logs immediately after the error has occurred without turning the power off and on. Perform 2.6 Log RAP,.
8. The ESS Board rarely fails, contact Technical Support for further instructions.

016-795 Media Reader Format Error RAP

016-795 The MediaLib detected this error while performing the operation that requires access to media.

Procedure

Perform the steps that follow:

1. Have the customer check the media content from the PC. Check the file format/directory in the media and the selected mode (Digital Camera Print/Document Print), then reset the settings.
2. Reload or update the Firmware, GP 9.
3. Obtain the log file using the log tool. Perform 2.6 Log RAP
   - If there was a reboot after the error had occurred and hence was unable to Obtain the log, set NVM (700-530) to'0' to perform log collection and return the NVM (700-530) to'1' after completing the procedure.
4. Change any possible mechanical settings for corrective actions or detection conditions and repeat the operation.
5. Check the version of Controller ROM. If it is not the latest, download and update to the latest software revision. (Refer to GP 9 Firmware Version Upgrade)
6. Turn the power off and on.Get the procedures for reproducing an error according to the operation that was performed when the error occurred.
   a. Check the exact occurrence timing during job execution.
   b. Check the job settings from the Panel.
   c. Collect other information as much as possible to reproduce the error.
7. Obtain logs immediately after the error has occurred without turning the power off and on. Perform 2.6 Log RAP.
8. The ESS Board rarely fails, contact Technical Support for further instructions.

016-796 Document Insert Operation Error RAP

016-796 The MediaLib detected this error while performing the operation that requires access to Media.

Procedure

Perform the steps that follow:

1. Have the customer check the me dis content from the PC. Check whether the print file attribute data is displayed on the PC, then reset the settings.
2. Reload or update the Firmware, GP 9.
3. Obtain the log file using the log tool. Perform 2.6 Log RAP
   - If there was a reboot after the error had occurred and hence was unable to Obtain the log, set NVM (700-530) to'0' to perform log collection and return the NVM (700-530) to'1' after completing the procedure.
4. Change any possible mechanical settings for corrective actions or detection conditions and repeat the operation.
5. Check the version of Controller ROM. If it is not the latest, download and update to the latest software revision. (Refer to GP 9 Firmware Version Upgrade)
6. Turn the power off and on.Get the procedures for reproducing an error according to the operation that was performed when the error occurred.
   a. Check the exact occurrence timing during job execution.
   b. Check the job settings from the Panel.
   c. Collect other information as much as possible to reproduce the error.
7. Obtain logs immediately after the error has occurred without turning the power off and on. Perform 2.6 Log RAP.
8. The ESS Board rarely fails, contact Technical Support for further instructions.

016-797 Image File Read Error RAP

016-797 The MediaLib detected this error while performing the operation that requires access to media.

Procedure

Perform the steps that follow:

1. Have the customer check the me dis content from the PC. Check whether the print file images are displayed on the PC, then reset the settings.
2. Reload or update the Firmware, GP 9.
3. Obtain the log file using the log tool. Perform 2.6 Log RAP
   - If there was a reboot after the error had occurred and hence was unable to Obtain the log, set NVM (700-530) to'0' to perform log collection and return the NVM (700-530) to'1' after completing the procedure.
4. Change any possible mechanical settings for corrective actions or detection conditions and repeat the operation.
5. Check the version of Controller ROM. If it is not the latest, download and update to the latest software revision. (Refer to GP 9 Firmware Version Upgrade)
6. Turn the power off and on.Get the procedures for reproducing an error according to the operation that was performed when the error occurred.
   a. Check the exact occurrence timing during job execution.
   b. Check the job settings from the Panel.
   c. Collect other information as much as possible to reproduce the error.
7. Obtain logs immediately after the error has occurred without turning the power off and on. Perform 2.6 Log RAP, **the error persists**.
8. The ESS Board rarely fails, contact Technical Support for further instructions.

016-799 PLW Print Instruction Fail RAP

016-799 The specified print parameter is abnormal.

Procedure

Perform the steps that follow:

1. Have the customer repeat the operation.
2. Reload or update the Firmware, GP 9.
3. Obtain logs immediately after the error has occurred without turning the power off and on. Perform 2.6 Log RAP.
4. Contact Technical Support for further instructions.

016-910, 016-911 Required Resource Not Ready RAP

016-910 The paper requested by the selected print parameters are not installed.

016-911 The paper requested by the print specification is not loaded or different sizes and/or types of paper switching are requested from the same tray.

Procedure

Perform the steps that follow:

1. Have the customer correctly load paper.
2. Reload or update the Firmware, GP 9.
3. Obtain the log file using the log tool. Perform 2.6 Log RAP
   - If there was a reboot after the error had occurred and hence was unable to Obtain the log, set NVM (700-530) to'0' to perform log collection and return the NVM (700-530) to'1' after completing the procedure.
4. Change any possible mechanical settings for corrective actions or detection conditions and repeat the operation.
5. Check the version of Controller ROM. If it is not the latest, download and update to the latest software revision. (Refer to GP 9 Firmware Version Upgrade)
6. Turn the power off and on.Get the procedures for reproducing an error according to the operation that was performed when the error occurred.
   a. Check the exact occurrence timing during job execution.
   b. Check the job settings from the Panel.
   c. Collect other information as much as possible to reproduce the error.
7. Obtain logs immediately after the error has occurred without turning the power off and on. Perform 2.6 Log RAP.
8. The ESS Board rarely fails, contact Technical Support for further instructions.

016-985 Scan to Email Data Size RAP

016-985 Scan to email data size exceeded.

Procedure

Perform the steps that follow:

1. Have the customer reduce the number of documents, reduce the resolution, or increase the compression ratio if the job is multi-value scan.
2. Reload or update the Firmware, GP 9.
3. Obtain the log file using the log tool. Perform 2.6 Log RAP
   - If there was a reboot after the error had occurred and hence was unable to Obtain the log, set NVM (700-530) to'0' to perform log collection and return the NVM (700-530) to'1' after completing the procedure.
4. Change any possible mechanical settings for corrective actions or detection conditions and repeat the operation.
5. Check the version of Controller ROM. If it is not the latest, download and update to the latest software revision. (Refer to GP 9 Firmware Version Upgrade)
6. Turn the power off and on.Get the procedures for reproducing an error according to the operation that was performed when the error occurred.
   a. Check the exact occurrence timing during job execution.
   b. Check the job settings from the Panel.
   c. Collect other information as much as possible to reproduce the error.
7. Obtain logs immediately after the error has occurred without turning the power off and on. Perform 2.6 Log RAP.
8. The ESS Board rarely fails, contact Technical Support for further instructions.

017-500 Job Limit Illegal Response RAP

017-500 Invalid response from job limit server.

Procedure

Have the customer:

1. Check the job parameter settings, then re-run the job.
2. Check the response packet from the job limit server.
3. Reload or update the Firmware, GP 9.
4. Obtain logs immediately after the error has occurred without turning the power off and on. Perform 2.6 Log RAP.
5. Contact Technical Support for further instructions.

017-501 Multiple Permission Restrictions RAP

017-501 A print rights violation has occurred.

Procedure

Have the customer change the user privileges.

017-503 Password Over Maximum RAP

017-503 Password has exceeded maximum number of digits.

Procedure

1. Have the customer lower the number of password digits.
2. Reload or update the Firmware, GP 9.
3. Obtain logs immediately after the error has occurred without turning the power off and on. Perform 2.6 Log RAP.
4. Contact Technical Support for further instructions.

017-504, 017-505 JobLimit Server Connection Fail RAP

017-504 JobLimit Server Connection Fail (LUI)

017-505 JobLimit Server Connection Fail

Procedure

Have the customer verify the network status and the operating status of JobLimit Server.

017-713 Start TLS Unsupported Fail RAP

017-713 Start TLS unsupported fail.

Procedure

1. Have the customer change the SSL operation mode setting to other than STARTTLS mode.
2. Reload or update the Firmware, GP 9.
3. Obtain logs immediately after the error has occurred without turning the power off and on. Perform 2.6 Log RAP.
4. Contact Technical Support for further instructions.

017-714 SMTP Over SSL Fail RAP

017-714 SSL communication failure with SMTP server.

Procedure

Perform the steps that follow:

1. Have the customer check if this occurred in TLS Mode, it may be due to an incorrect port number. Check the Port Number settings of the SMTP Server.
2. Reload or update the Firmware, GP 9.
3. Obtain logs immediately after the error has occurred without turning the power off and on. Perform 2.6 Log RAP.
4. Contact Technical Support for further instructions.

017-715 SSL Certificate Fail RAP

017-715 An SSL Server Authentication Error has occurred because there is something wrong in the Server Certificate Data.

Procedure

1. Have the customer register the root certificate of the SMTP server SSL certificate in the machine.
2. Reload or update the Firmware, GP 9.
3. Obtain logs immediately after the error has occurred without turning the power off and on. Perform 2.6 Log RAP.
4. Contact Technical Support for further instructions.

017-716, 717, 718 SSL Certificate (SMTP) Fail RAP

017-716 The validity period of the server certificate has not started.

017-717 The validity period of the server certificate has expired.

017-718 The server name does not match the server address of the server certificate.

Procedure

Have the customer:

1. Check that the SMTP server clock and machine clock are correct.
2. Check the validity period of the SMTP server certificate.
3. Check that the server name that are registered in the SMTP server certificate and the server address are correct.
4. If the clocks are correct, change the SMTP server SSL certificate to one that is valid.
5. Reload or update the Firmware, GP 9.
6. Obtain logs immediately after the error has occurred without turning the power off and on. Perform 2.6 Log RAP.
7. Contact Technical Support for further instructions.

   NOTE: *This problem can also be fixed by switching off the machines SSL Server Verification setting. This will render the machine unable to guarantee the authenticity of the SMTP server that it is connecting to.*

017-719 SMTP Over SSL Internal Fail RAP

017-719 Internal software error has occurred during SMTP over SSL process.

Procedure

Perform the steps that follow:

1. Have the customer repeat the operation.
2. Reload or update the Firmware, GP 9.
3. Obtain logs immediately after the error has occurred without turning the power off and on. Perform 2.6 Log RAP.
4. Contact Technical Support for further instructions.

017-720, 017-721 PJL Command Fail RAP

017-720 Contract type value is incorrect.

017-721 Geographic region value is incorrect.

Procedure

Have the customer correct the contract type or geographic region value specified by PJL command, then try again.

017-722 Total Impressions Over Fail RAP

017-722 The total impressions of billing meter in the data for PJL diag is 9,999,900 or more.

Procedure

Have the customer perform the operation when the value of total impressions is between 0 and 9,999,900.

017-725 Forced Annotation Syntax Fail RAP

017-725 Syntax error in Forced Annotation instructions is detected.

Procedure

Perform the steps that follow:

1. Have the customer check the driver settings.
2. Obtain the log file using the log tool. Perform 2.6 Log RAP
   - If there was a reboot after the error had occurred and hence was unable to Obtain the log, set NVM (700-530) to'0' to perform log collection and return the NVM (700-530) to'1' after completing the procedure.
3. Change any possible mechanical settings for corrective actions or detection conditions and repeat the operation.
4. Check the version of Controller ROM. If it is not the latest, download and update to the latest software revision. (Refer to GP 9 Firmware Version Upgrade)
5. Turn the power off and on.Get the procedures for reproducing an error according to the operation that was performed when the error occurred.
   a. Check the exact occurrence timing during job execution.
   b. Check the job settings from the Panel.
   c. Collect other information as much as possible to reproduce the error.
6. Obtain logs immediately after the error has occurred without turning the power off and on. Perform 2.6 Log RAP, **the error persists**.
7. The ESS Board rarely fails, contact Technical Support for further instructions.

017-728 Scan Job-Flow Document Fail RAP

017-728 Syntax error in Forced Annotation instructions is detected.

Primary Causes

1. MS Word or MS Excel is specified as the output format in the instructions, but the target document for processing does not possess the conditions required for format processing.
2. Extension Scanner Kit not installed (Scan To Office Selection Service not enabled).

Procedure

Perform the steps that follow:

1. Have the customer Change output format to other than MS Word or MS Excel.
   - Start Job Flow Service after satisfying all conditions below.
   - The document for processing is a Scan document.
   - The document for processing is full color.
   - Size of the document for processing is 50mmx50mm or more, 297mmx432mm or less.
   - Color space of the document for processing is standard color space.
   - Resolution of the document for processing is 300dpi.
   - Magnification of the of the document for processing is 100%.
2. Verify the Extension Scanner Kit Position.
3. Obtain the log file using the log tool. Perform 2.6 Log RAP
   - If there was a reboot after the error had occurred and hence was unable to Obtain the log, set NVM (700-530) to'0' to perform log collection and return the NVM (700-530) to'1' after completing the procedure.
4. If possible, Obtain logs immediately after the error has occurred without turning the power off and on. Perform 2.6 Log RAP, **the error persists**.
5. Contact Technical Support for further instructions.

017-730 Network Error in PDL Transfer RAP

017-730 Network occurred during PDL data transfer.

Procedure

Have the customer:

1. Check the connection of the network cable.
2. Check the destination device is powered on.
3. Check that the IPP port of the destination device is enabled.
4. Obtain logs immediately after the error has occurred without turning the power off and on. Perform 2.6 Log RAP, **the error persists**.
5. The ESS Board rarely fails, contact Technical Support for further instructions.

017-731 POP Server Not Connected RAP

017-731 Failed to connect to the POP server.

Procedure

Perform the steps that follow:

1. Have the customer check that network communication between the POP server and the machine is available:
   a. Check that the POP server IP address that is set in the device is correct.
   b. Check the connection of network cables.
2. Obtain logs immediately after the error has occurred without turning the power off and on. Perform 2.6 Log RAP, **the error persists**.
3. Contact Technical Support for further instructions.

017-732 Offline Error in PDL Transfer RAP

017-732 Unable to send because destination printer is offline.

Procedure

1. Have the customer disable the offline status of the destination device.
2. Obtain logs immediately after the error has occurred without turning the power off and on. Perform 2.6 Log RAP, **the error persists**.
3. Contact Technical Support for further instructions.

017-733 Internal Error in PDL Transfer RAP

017-733 Unable to send because destination printer is offline.

Procedure

1. Have the customer repeat the operation.
2. Obtain logs immediately after the error has occurred without turning the power off and on. Perform 2.6 Log RAP, **the error persists**.
3. Contact Technical Support for further instructions.

017-734 IPP Data Error RAP

017-734 Syntax error, usage of undefined command, parameter error, damage of the file, or internal error of the decomposer has occurred during the decomposer process of a direct print job that used IPP in its network protocol.

Procedure

Perform the steps that follow:

1. Have the customer print by using a different print method (printer driver or utility other than print from IPP) that is supported by the device.
2. Obtain logs immediately after the error has occurred without turning the power off and on. Perform 2.6 Log RAP, **the error persists**.
3. Contact Technical Support for further instructions.

017-737, 017-738 Out of Memory Fail RAP

017-737 Custom Transfer Out Of Memory Fail.

017-738 Custom Transfer JVM Internal Fail.

Procedure

Have the customer:

1. Deactivate or delete all unnecessary plug-ins.
2. Power down then power the macine on. GP 4
3. From special boot menu, perform HDD initialize.

017-739, 017-740 Transfer Service Not Available RAP

017-739 Custom transfer XCP not activated error.

017-740 Custom transfer plug-in not activated error.

Procedure

Have the customer:

1. Enable the embedded plug-in feature. **017-739**
   a. **For UI Panel:**
   b. Login as System Administrator
   c. Select the [System Settings] tab -> [Common Service Settings] -> [Plugin Settings], set [Embedded Plugins] to [Enabled] and reboot the machine GP 4.
   d. **For CWIS:**
   e. Login as System Administrator
   f. select [Properties] tab, [Security] -> [Plug-in Settings] - > [Plug-in Settings], enable [Plug-in Settings] and reboot the machine GP 4.
2. Input the software key for the customization kit.
3. Enable the embedded plug-in feature. **017-740**
   a. **For UI Panel:** N/A
   b. **For CWIS:**
   c. Login as System Administrator
   d. Select [Properties] tab, [Security] -> [Plugin Settings] -> [List of Embedded Plug-ins], regis er the custom transfer plug-in and reboot the machine. GP 4.

017-741 Custom Transfer Invalid Plug-In RAP

017-741 The instruction that was specified by the instruction set to the plug-in and the feature provided by the plug-in (API) are mismatched when the custom transfer job is in progress.

Procedure

Have the customer:

1. Upgrade the embedded plug-in feature (install the latest version).
2. Check the contents of the instruction set that is being used. If the instruction set was generated by a custom service, revise the custom service contents.

017-742, 743, 744 Custom Transfer Plug-In Connection RAP

017-742 Custom transfer plug-in server connection error.

017-743 Custom transfer plug-in authentication error.

017-744 Custom transfer plug-in server access error.

Procedure

Have the customer:

1. 017-742 - Check whether the transfer destination server, etc. and the machine are able to communicate via the network.
2. 017-743 - Check whether it is possible to log in to the transfer destination server, etc. by using the specified user name and password.
3. 017-744 - Check whether it is possible to log in to the transfer destination server, etc. by using the specified user name and password.

017-747 Custom Transfer Plug-In Connection Timeout RAP

017-747 Custom transfer plug-in communication timed out error.

Procedure

Have the customer:

1. Wait a while, then re-run the job.
2. If the situation does not improve, consult with the Network Administrator.

017-748 Custom Transfer Plug-In Invalid Device RAP

017-748 Custom transfer plug-in invalid device settings data error.

Procedure

Have the customer check the device settings required for file transfer.

017-749 Custom Transfer Plug-In XML Fail RAP

017-749 When extracting the custom transfer parameter from XML file, the Obtaining of the parameter has failed, the parameter format is inconsistent, or the parameter value cannot be processed due to wrong grammar.

Procedure

Have the customer check the contents of the instruction set that is being used. If the instruction set was generated by a custom service, revise the custom service contents.

017-750 Custom Transfer Plug-In Internal Fail RAP

017-750 An internal logic error was detected in the custom transfer plug-in.

Procedure

Perform the steps that follow:

1. Power down then power up the machine, GP 4.
2. Have the customer revise the custom transfer plug-in and then reinstall it.

017-751 Custom Transfer Plug-In Other Fail RAP

017-751 An error specific to the custom transfer plug-in was detected.

Procedure

Have the customer refer to the error details in the job undelivered transmission report, then take appropriate action.

017-755 Software Download Via Network Fail RAP

017-755 A software download via the network was performed when the software download via network set as prohibited.

Procedure

Perform the steps that follow:

1. Either set the software download via network to allowed or perform the software download using a USB.
2. Obtain the log file using the log tool. Perform 2.6 Log RAP
   - If there was a reboot after the error had occurred and hence was unable to Obtain the log, set NVM (700-530) to'0' to perform log collection and return the NVM (700-530) to'1' after completing the procedure.
3. Change any possible mechanical settings for corrective actions or detection conditions and repeat the operation.
4. Check the version of Controller ROM. If it is not the latest, download and update to the latest software revision. (Refer to GP 9 Firmware Version Upgrade)
5. Turn the power off and on.Get the procedures for reproducing an error according to the operation that was performed when the error occurred.
   a. Check the exact occurrence timing during job execution.
   b. Check the job settings from the Panel.
   c. Collect other information as much as possible to reproduce the error.
6. Obtain logs immediately after the error has occurred without turning the power off and on. Perform 2.6 Log RAP, **the error persists**.
7. The ESS Board rarely fails, contact Technical Support for further instructions.

017-759 Download Data Inspection Error RAP

017-759 Electronic signature verification error of download data.

Procedure

1. Have the customer re-Obtain the download data then perform the operation again.
2. Obtain logs immediately after the error has occurred without turning the power off and on. Perform 2.6 Log RAP, **the error persists**.
3. Contact Technical Support for further instructions.

017-760, 017-766 POP Over SSL Fail RAP

017-760 SSL communication failure with POP server.

017-766 SSL communication failure with POP Server.

Procedure

Perform the steps that follow:

1. If this had occurred in TSL mode, it may be due to different port number. Have the customer check the port number settings of the POP server.
2. Obtain logs immediately after the error has occurred without turning the power off and on. Perform 2.6 Log RAP, **the error persists**.
3. Contact Technical Support for further instructions.

017-761, 017-767 SSL Server Cert Untrusted (POP) RAP

017-761 An SSL server authentication error has occurred as there is something wrong in the server certificate data.

017-767 An SSL server authentication error has occurred as there is something wrong in the server certificate data.

Procedure

1. The machine is unable to trust the SSL certificate of the POP server. Have the customer register the root certificate of the POP server SSL certificate in the machine.
2. Obtain logs immediately after the error has occurred without turning the power off and on. Perform 2.6 Log RAP, **the error persists**.
3. Contact Technical Support for further instructions.

017-762, 764, 768, 769, 770 SSL Certificate (POP) Fail RAP

017-762 The validity period of the server certificate has not started yet.

017-764 The server name does not match the server address of the server certificate.

017-768 The validity period of the Server Certificate has not started yet.

017-769 The validity period of the server certificate has expired.

017-770 The server name does not match the server address of the server certificate.

Procedure

Have the customer:

1. Check that the clock of the POP server and the machine are correct. If the clock is correct, change the POP server SSL certificate to one that is valid.
2. Check the validity period settings of the POP server certificate.
3. Check that the server name that are registered in the POP server certificate and the server address are correct.
4. Obtain logs immediately after the error has occurred without turning the power off and on. Perform 2.6 Log RAP, **the error persists**.
5. Contact Technical Support for further instructions.

   NOTE: *This problem can also be fixed by switching off the machines SSL Server Verification setting. This will render the machine unable to guarantee the authenticity of the POP server that it is connecting to.*

017-765, 017-771 POP Over SSL Internal Fail RAP

017-765 Software internal error has occurred when POP over SSL process is in progress.

017-771 Software internal error has occurred when POP over SSL process is in progress.

Procedure

1. Have the customer repeat the operation.
2. Obtain logs immediately after the error has occurred without turning the power off and on. Perform 2.6 Log RAP, **the error persists**.
3. Contact Technical Support for further instructions.

017-772 Scan All Blank Page Fail RAP

017-772 It was detected that all the pages are blank.

Procedure

Have the customer:

1. Darken the density during scan.
2. Turn off the blank suppression instruction.
3. Adjust the following settings.
   a. **840-223**: Blank Page Detection IFormatter Control Parameter:
      - Lower the File Size Based Blank Paper Detection Level.
   b. **840-224**: Blank Page Detection IFormatter Control Parameter:
      - lower the Black Dot Count Based Blank Paper Detection Level.

017-773 Netlog Task Error RAP

017-773 Detected fatal error during Netlog operation.

Procedure

Have the customer check the setting related to the Netlog function.

017-774 Message Lost Error RAP

017-774 Message discard error.

Procedure

For information only, no service action necessary.

017-775 Network API Error RAP

017-775 Sending message was discarded due to sending API error.

Procedure

Have the customer check if there is any issues on the network route to the Syslog server.

017-776, 017-777 Syslog Server Error RAP

017-776 The sending message was discarded because the server sent an invalid response or did not respond.

017-777 The sending queue became full and discarded the message sending request.

Procedure

Have the customer check the status of the Syslog server, address value of the Syslog that is set to the device, whether there is an issue in the network route between the device and the Syslog server, or a network cable failure.

017-778 Queue Error RAP

017-778 The sending queue became full due to no IP address being set or assigned, and discarded the message sending.

Procedure

Have the customer check if the IP address of the machine is set.

017-779 Link Error RAP

017-779 Detected unplugged network cable on the device side.

Procedure

Check the connection state of the network cable.

017-780 Held Job Timeout RAP

017-780 Auto delete due to the timeout of held Job that has been overtaken.

Procedure

Perform the steps that follow:

1. Have the customer disable the auto delete setting or change the timer setting (1-7200 minutes) to an appropriate value.
2. Obtain logs immediately after the error has occurred without turning the power off and on. Perform 2.6 Log RAP, **the error persists**.
3. Contact Technical Support for further instructions.

017-782, 784, 785, 786 Custom Image Processing Plug-In RAP

017-782 Detected mismatch of the version of image processing module.

017-784 Custom image processing XML error.

017-785 Detected an error that is custom image processing plug-in specific.

017-786 Image processing error of custom image processing plug-in.

Procedure

Perform the steps that follow:

1. Have the customer reinstall after correcting the custom image processing plug-in.
2. Obtain logs immediately after the error has occurred without turning the power off and on. Perform 2.6 Log RAP, **the error persists**.
3. Contact Technical Support for further instructions.

017-783 Custom Image Processing Memory RAP

017-783 The operation was unable to continue due to the memory shortage of the image processing module that is executed in the controller.

Procedure

Perform the steps that follow:

1. Have the customer take any one of the actions that follow:
   a. Lower the resolution.
   b. Change the output color to black & white.
2. Obtain logs immediately after the error has occurred without turning the power off and on. Perform 2.6 Log RAP, **the error persists**.
3. Contact Technical Support for further instructions.

017-787 Google Cloud Print Data Error RAP

017-787 Syntax error, undefined command, parameter error, file corruption, decomposer internal error occurred when the decomposer is processing at the Google Cloud Print processing path.

Procedure

Perform the steps that follow:

1. Have the customer use a different print method supported by the machine (print driver, utility other than Google Cloud Print).
2. Obtain the log file using the log tool. Perform 2.6 Log RAP
   - If there was a reboot after the error had occurred and hence was unable to Obtain the log, set NVM (700-530) to'0' to perform log collection and return the NVM (700-530) to'1' after completing the procedure.
3. Change any possible mechanical settings for corrective actions or detection conditions and repeat the operation.
4. Check the version of Controller ROM. If it is not the latest, download and update to the latest software revision. (Refer to GP 9 Firmware Version Upgrade)
5. Turn the power off and on.Get the procedures for reproducing an error according to the operation that was performed when the error occurred.
   a. Check the exact occurrence timing during job execution.
   b. Check the job settings from the Panel.
   c. Collect other information as much as possible to reproduce the error.
6. Obtain logs immediately after the error has occurred without turning the power off and on. Perform 2.6 Log RAP, **the error persists**.
7. The ESS Board rarely fails, contact Technical Support for further instructions.

017-789 Job Limit Estimation Logic Fail RAP

017-789 During job limit estimate acquisition, a logic error was detected in the ComlDvm_GetEstimation.

Procedure

1. Have the customer check the job settings, then re-run the job.
2. Obtain logs immediately after the error has occurred without turning the power off and on. Perform 2.6 Log RAP, **the error persists**.
3. Contact Technical Support for further instructions.

017-790 to 017-799 Print Permission RAP

017-790 Color print made in a time zone that is prohibited.

017-791 Print made in a time zone that is prohibited.

017-792 Printing performed despite being prohibited.

017-793 Color printing performed despite being prohibited.

017-794 Print made from a prohibited application.

017-795 Color print made from a prohibited application.

017-796 Single sided print made from a prohibited application.

017-797 Print made from a paper tray that is prohibited.

017-798 Job type print made that is prohibited.

017-799 Single sided print made despite being prohibited.

Procedure

Have the customer set the permissions as required.

018-400 IPSEC Configuration Mismatch RAP

018-400 IPSEC error (setting mismatch).

Procedure

Have the customer clear the IPSEC setting mismatch and re-enable the IPSEC.

NOTE: *Mismatched IPSEC settings occur when the password is not set because the authentication method is set to pre-shared key, or when IPSEC certificate is not set because the authentication method is set to digital signature.*

018-405 User Account Disabled RAP

018-405 User account disabled error.

Procedure

Perform the steps that follow:

1. Advise the customer that there is a check mark at Account Invalid for the relevant user in the active directory of the LDAP authentication destination server. The server has been set to prohibit access from the relevant user.
2. Have the customer consult with the Server Administrator.

018-406 Setting Status of IP Address (IPv4) RAP

018-406 Setting state of the same IP address (IPv4).

Procedure

Perform the steps that follow:

1. Have the customer change the setting to a different IP address.
2. Verify, in the client environment:
   a. The client service will not aggregate information from the remote environment, or,
   b. Even if information is aggregated, there is no possibility of multiple billing, allowing set ing of the same IP address by the following C/L.
      - 701-644:TCP/IPnformation: Setting state of the same IP address(IPv4).

018-407 Setting Status of IP Address (IPv6) RAP

018-407 Setting state of the same IP address (IPv6).

Procedure

Have the customer change the setting to a different IP address. Either that or allow the same IP address setting.

018-409, 412, 413 Duplicate IPv6 Address 1 RAP

018-409 The same IP address device as the IPv6 of this machine exists on the network in the network environment where the Ether 2 is connected.

018-412 The same IP address device as the state-less auto setting address 2 of this machine exists on the network in the network environment where Ether 2 is connected.

018-413 The same IP address device as the IPv6 state-less auto setting address 3 of this machine exists on the network in the network environment where the Ether 2 is connected.

Procedure

Perform the steps that follow:

1. Have the customer:
   a. Change the IPv6 address of the network upper apparatus that is duplicated to resolve the IP address duplication.
   b. Check if the IP address that was set in state-less address auto setting is not used in other places.
2. Obtain logs immediately after the error has occurred without turning the power off and on. Perform 2.6 Log RAP, **the error persists**.
3. Refer to 2.4 NET System Status Fail for further instructions.
4. Contact Technical Support for further instructions.

018-410, 018-411 Dynamic DNS Update Failure RAP

018-410 For Ethernet 2, failed to update the IPv4 address and host name to the DNS server.

018-411 For Ethernet 2, failed to update the IPv6 address and host name to the DNS server.

Procedure

Perform the steps that follow:

1. Have the customer:
   a. Check if the DNS server address is correctly set to the device.
   b. Check if the DNS server is set so that the dynamic DNS can be operated.
2. Refer to 2.4 NET System Status Fail for further instructions.

018-414 Duplicate IPv6 Address 2 RAP

018-414 The IPv6 manual setting address that was set in this machine in a network environment connected to Ether 2 is invalid.

Procedure

Perform the steps that follow:

1. Have the customer:
   a. Change the IPv6 manual setting address of this machine to the IPv6 address that can be used in the machine address.
   b. Check if the IPv6 address that was automatically set as manual address is a valid address.
2. Refer to 2.4 NET System Status Fail for further instructions.

018-415 Duplicate IPv6 Address 3 RAP

018-415 The same IP address device as the IPv6 manual setting address of this machine exists on the network in the network environment where the Ether 2 is connected.

Procedure

Perform the steps that follow:

1. Have the customer:
   a. Change the IPv6 manual setting address of this machine or the IPv6 address of the network upper apparatus.
   b. Check if the IPv6 address that was automatically set as manual address is a valid address.
2. Refer to 2.4 NET System Status Fail for further instructions.

018-416 Duplicate IPv6 Address 4 RAP

018-416 The same IP address device as the IPv6 link local address of this machine exists on the network in the network environment where Ether 2 is connected.

Procedure

Perform the steps that follow:

1. Have the customer:
   a. Change the IPv6 address of the network upper apparatus that is duplicated to resolve the IP address duplication.
   b. Check if the IPv6 address that was automatically set as link local address is not used in other places.
2. Refer to 2.4 NET System Status Fail for further instructions.

018-424 WLAN WPA-Enterprise Certificate Empty Failure RAP

018-424 A wireless WPA-Enterprise authentication root certificate or client certificate is not stored in the machine.

Procedure

Perform the steps that follow:

1. Store a root certificate or client certificate in the machine that will be used in wireless WPA-Enterprise authentication.
2. If a WPA-Enterprise authentication root certifi-cate or client certificate can-not be Obtained, use a type of wireless security other than WPA-Enterprise.

018-425 WLAN WPA-Enterprise Certificate Unavailability Failure RAP

018-425 The WPA-Enterprise authentication root certificate or client certificate cannot be used.

Procedure

Perform the steps that follow:

1. Reconfigure the root certificate or client certificate in the machine that will be used in wire-less WPA-Enterprise authentication.
2. If a WPA-Enterprise authentication root certifi-cate or client certificate can-not be Obtained, use a type of wireless security other than WPA-Enterprise.

018-426 WLAN WPA-Enterprise server certificate failure

018-426 An irregularity was detected in the server certificate that was received during wireless WPA-Enterprise authentica-tion execution. This includes when the server certificate cannot be referenced.

Procedure

Perform the steps that follow:

1. Check if the server certificate is within the expiration date and that the certificate type and signature algorithm are supported. Use an appropriate certificate.
2. If a server certificate that satisfies the request cannot be used, use a type of wire-less security other than WPA-Enterprise.

018-427 Duplicate IP address range Wi-Fi and Wi-Fi Direct

018-427 An duplicate range setting was detected in the machine's Wi-Fi IP addresses and Wi-Fi Direct IP addresses.

Procedure

Have the customer change the IP address of the machine's Wi-Fi Direct DHCP server to be outside the duplicate range of the IP addresses set for Wi-Fi.

018-428 WLAN Module Connection Failure RAP

018-428 The WLAN module has not been correctly connected to the machine.

Procedure

Perform the steps that follow:

1. Turn off the machine's power and check the installation of the WLAN module.
2. If the fault persists,
   a. Replace WiFi module, REP 18.1.11(MFP), REP 18.5.11 (SFP)
   b. Replace ESS PWBA, REP 18.1.5 (MFP) , REP 18.5.5 (SFP)

018-429, 430 Duplicate IP address IPv4 (WiFi) RAP

018-429 Duplicate IP address IPv4 (WiFi) - There is a device on the network with the same IP address as the machine's IPv4 address in the network environment that WiFi is connected to.

018-430 Duplicate IP address IPv4 (WiFi Direct) - There is a device on the network with the same IP address as the machine's IPv4 address in the network environment that WiFi Direct is connected to.

Procedure

Perform the steps that follow:

1. Change the machine's IPv4 address or the IPv4 address of the device on the network.
2. If the fault persists,
   a. For a manual address setting, check if the IP address set by the customer is being used somewhere else.
   b. For BOOTP and DHCP settings, check with the customer regarding the con- igura- tion of the servers.

018-431 Duplicate IPv6 address (WiFi) RAP

018-431 There is a device on the network with the same IP address as the machine's IPv6 "Auto Stateless Address 1" or "DHCPv6 Auto Address" in the network environment that WiFi is connected to.

Procedure

Perform the steps that follow:

1. Change the IPv6 address of the device on the network with the duplicate address to resolve the problem.
2. If the fault persists,
   a. Check if the IP address automatically set as the stateless address is being used somewhere else.
   b. Check if the IP address set with auto DHCPv6 is being used somewhere else.

018-432 Duplicate IPv6 address (WiFi) RAP

018-432 There is a device on the network with the same IP address as the machine's "Auto Stateless Address 2" in the network environment that WiFi is connected to.

Procedure

Perform the steps that follow:

1. Change the IPv6 address of the device on the network with the duplicate address to resolve the problem.
2. If the fault persists, check if the IP address automatically set as the stateless address is being used somewhere else.

018-433 Duplicate IPv6 address (WiFi) RAP

018-433 There is a device on the network with the same IP address as the machine's IPv6 "Auto Stateless Address 3" or "DHCPv6 Auto Address" in the network environment that WiFi is connected to.

Procedure

Perform the steps that follow:

1. Change the IPv6 address of the device on the network with the duplicate address to resolve the problem.
2. If the fault persists,
   a. Check if the IP address automatically set as the stateless address is being used somewhere else.
   b. Check if the IP address set with auto DHCPv6 is being used somewhere else.

018-434 Duplicate IPv6 address (WiFi) RAP

018-434 IPv6 "Manual Address" set on the machine is invalid in the network environment that WiFi is connected to.

Procedure

Perform the steps that follow:

1. Change the machine's "IPv6 (Manual Address)" to an IPv6 address that can be used for the machine's address.
2. If the fault persists, check if an invalid address is being used for the IPv6 address automatically set as the manual address.

018-435 Duplicate IPv6 address (WiFi) RAP

018-435 There is a device on the network with the same IP address as the machine's IPv6 "Manual Address" in the network environment that WiFi is connected to.

Procedure

Perform the steps that follow:

1. Change the machine's IPv6 "Manual Address" or the IPv6 address of the device on the network.
2. If the fault persists, check if the IP address automatically set as the manual address is being used somewhere else.

018-436 Duplicate IPv6 Address (WiFi) RAP

018-436 There is a device on the network with the same IP address as the machine's IPv6 "Link-local Address" in the network environment that WiFi is connected to.

Procedure

Perform the steps that follow:

1. Have the customer change the IPv6 address of the device on the network with the duplicate address to resolve the problem.
2. If the fault persists, Check if the IPv6 address automatically set as the "Link-local Address" is being used somewhere else.

018-500, 501, 503, 504, 506 , 507, 508 CA Server Error RAP

018-500 The SSL server that is necessary for CA could not start because there was no server certificate or private key at an attempt to start the device.

018-501 The device could not connect to the CA server when trying to do CA authentication. The device has failed in communication.

018-503 The device received a message from the CA server and was waiting for a JRM/UI judgment, but received no response in time.

018-504 During communication between the device and the CA server for authentication, a mismatch in Session ID between both has occurred.

018-506 During communication between the device and the CA server, a mismatch in Field ID between both has occurred.

018-507 The CA authentication server requested an entry of user info, and the server determined that the entered info was different.

018-508 In process of CA authentication, the device has received a server exception message from the CA authentication server.

Procedure

Have the customer:

1. Make the IOT and the controller the same in agreement info.
2. Set up the server certificate, or set the CA function to off.
3. Check the address of the CA server, or recheck the connection to the network.
4. Retry the authentication operation.
5. Enter the correct user name and password.
6. Check the status of the CA server.
7. Obtain logs immediately after the error has occurred without turning the power off and on. Perform 2.6 Log RAP.
8. Contact Support with the required logs for further assistance.

018-502 SMB Login Failure RAP

018-502 When logging in to the SMB server, it was detected that the workstations that can log in during SMB scan are limited.

Procedure

1. Have the customer check the properties information of the specified user and check whether the workstations that can log in to the server are limited.
2. Obtain logs immediately after the error has occurred without turning the power off and on. Perform 2.6 Log RAP.
3. Contact Support with the required logs for further assistance.

018-505 SMB-DOS Protocol Error RAP

018-505 SMB user authentication failed/unable to log into SMB scanner.

Procedure

1. Have the customer contact the network administrator for the correct user name or password.
   a. In the case of Windows Server 2003, synchronize the time SMB Server tells with the time this machine tells.

      NOTE: *If the user forgets his/her password, he/she needs to set up a new password.*
2. This is how to reset Password:
   a. On the domain controller for the active directory that has user info, select [Start] menu > [All Programs] > [Management Tool] > [Active Directory Users and Computers].
   b. From the left frame of the [Active Directory Users and Computers] window, select [Active Directory Users and Computers [Server] > [Domain] > [Users], and list user information.
   c. Right-click the target user on the right frame of the [Active Directory Users and Computers] window and select [Reset Password]
   d. Confirm users that are allowed to use Share Windows.
3. This is how to confirm users. (MacOS X v10.4)
   a. From [Dock], start the [System Environment Settings] icon.
   b. On the [System Environment Settings] window, click the [Share] icon.
   c. From the Select Service window, select 'Share Windows' and click the [Account] button.

018-509 Template Parameter Conflict RAP

018-509 CUI scan: an invalid job template is specified.

Procedure

Have the customer check whether the settings in the job template are correct. For example:

1. A setting that cannot be used in the device is set.
2. The transfer repository is not set correctly.
3. A nonexistent template name is specified.
4. Obtain logs immediately after the error has occurred without turning the power off and on. Perform 2.6 Log RAP.
5. Contact Support with the required logs for further assistance.

018-524 Invalid Device Network Setting RAP

018-524 CUI scan: an invalid job template is specified.

Procedure

Have the customer:

1. Check whether the port and network related settings that are required to execute the scan job are set properly in the device.
2. Check whether the DNS server setting is correct.
3. Check whether the port for the specified protocol is activate.
4. Obtain logs immediately after the error has occurred without turning the power off and on. Perform 2.6 Log RAP.
5. Contact Support with the required logs for further assistance.

018-526 to 018-529, 531, 532 CUI Scan Error RAP

018-526 A CUI scan start request was received when the job template is being polled.

018-527 CUI scan: internal error occurred when processing job template.

018-528 CUI scan: soap argument error.

018-529 CUI scan: duplication of soap job startup request.

018-531 Other errors during start-up of a CUI scan job.

018-532 Failed to create CUI scan job.

Procedure

1. Advise the customer to wait for a while, then perform the same operation again.
2. Obtain logs immediately after the error has occurred without turning the power off and on. Perform 2.6 Log RAP.
3. Contact Support with the required logs for further assistance.

018-530 Authentication Error RAP

018-530 Authentication/DV-related error during start-up of a CUI scan job.

Procedure

1. Advise the customer to either perform the correct authentication operation or check the limita ions (color mode, no. of sheets, services) that was set by the administrator.
2. Obtain logs immediately after the error has occurred without turning the power off and on. Perform 2.6 Log RAP.
3. Contact Support with the required logs for further assistance.

018-543 Shared Name Error in SMB Server RAP

018-543 Problem with the shared name of the SMB scan server.

Procedure

Have the customer:

1. Check the shared name specified then set the correct name.
2. Check that the user has the right to access the shared name specified.
3. Obtain logs immediately after the error has occurred without turning the power off and on. Perform 2.6 Log RAP.
4. Contact Support with the required logs for further assistance.

018-547 SMB Scan Users Restriction RAP

018-547 The number of SMB scan users has exceeded the limit.

Procedure

Have the customer:

1. Check the limit for the number of users that can connect to the shared folder.
2. Check whether the number of users who are concurrently using the server has exceeded the maximum number.
3. Obtain logs immediately after the error has occurred without turning the power off and on. Perform 2.6 Log RAP.
4. Contact Support with the required logs for further assistance.

018-556 HTTP Server Script Error RAP

018-556 HTTP error - invalid script.

Procedure

Have the customer:

1. Check that the drive and directory that are specified in the HTTP server that sends scanned documents are accessible.
2. Repeat the operation.
3. Obtain logs immediately after the error has occurred without turning the power off and on. Perform 2.6 Log RAP.
4. Contact Support with the required logs for further assistance.

018-557 HTTP Invalid Character in Filename RAP

018-557 HTTP file - invalid characters.

Procedure

1. Have the customer ensure that the file name that is specified in the scanned document destination does not contain any invalid characters.
2. Obtain logs immediately after the error has occurred without turning the power off and on. Perform 2.6 Log RAP.
3. Contact Support with the required logs for further assistance.

018-558 HTTP File Not Found RAP

018-558 The HTTP directory/file name does not exist.

Procedure

Have the customer:

1. Check that the directory that is specified in the scanned document destination HTTP server exists.
2. Check that the file name that is specified in the scanned document destination HTTP server exists.
3. Obtain logs immediately after the error has occurred without turning the power off and on. Perform 2.6 Log RAP.
4. Contact Support with the required logs for further assistance.

018-559 HTTP File Duplication Fail RAP

018-559 File name conflict stop.

Procedure

1. Advise the customer that when performing scan Jobs, set File Name Conflict to other than Cancel Job.
2. Obtain logs immediately after the error has occurred without turning the power off and on. Perform 2.6 Log RAP.
3. Contact Support with the required logs for further assistance.

018-560 to 018-563 HTTP Server Login Fail RAP

018-560 HTTP user authentication error.

018-561 HTTP error - not found.

018-562 HTTP response client error.

018-563 HTTP response server error.

Procedure

Have the customer:

1. Check whether the scanned document destination HTTP server is accessible from the PC.
2. Check the login user name.
3. Check the login password.
4. Check the name of scanned document destination HTTP server.
5. Check the server path name of scanned document destination HTTP server.
6. Obtain logs immediately after the error has occurred without turning the power off and on. Perform 2.6 Log RAP.
7. Contact Support with the required logs for further assistance.

018-564 Host Name Solution Error in HTTP RAP

018-564 Failed to resolve host name in HTTP.

Procedure

Have the customer:

1. Check whether the scanned document destination HTTP server has been registered in the DNS.
2. Check whether it is connected to the DNS server.
3. Check whether the DNS server address is set.
4. Obtain logs immediately after the error has occurred without turning the power off and on. Perform 2.6 Log RAP.
5. Contact Support with the required logs for further assistance.

018-565 Proxy Name Solution Error in HTTP RAP

018-565 Failed to resolve proxy name error in HTTP.

Procedure

Have the customer:

1. Check whether the proxy server name that is set in the device has been registered in the DNS.
2. Check whether it is connected to the DNS server.
3. Check whether the DNS server address is set.
4. Obtain logs immediately after the error has occurred without turning the power off and on. Perform 2.6 Log RAP.
5. Contact Support with the required logs for further assistance.

018-566, 018-567 Server Connect Error in HTTP RAP

018-566 Failed to connect to the HTTP server.

018-567 HTTP error - access error.

Procedure

Have the customer:

1. Check the network cable of the device.
2. Check whether the scanned document destination HTTP server is accessible from the PC.
3. Obtain logs immediately after the error has occurred without turning the power off and on. Perform 2.6 Log RAP.
4. Contact Support with the required logs for further assistance.

018-568 HTTP Server SSL Access Fail RAP

018-568 HTTP error - abnormal SSL connection.

Procedure

Have the customer:

1. Check whether the scanned document destination HTTP server is accessible from the PC.
2. Check whether the SSL setting of the scanned document destination HTTP server is valid.
3. Check the name of scanned document destination HTTP server.
4. Check the server path name of scanned document destination HTTP server.
5. Obtain logs immediately after the error has occurred without turning the power off and on. Perform 2.6 Log RAP.
6. Contact Support with the required logs for further assistance.

018-569 HTTP Server Certificate Fail RAP

018-569 HTTP error - invalid certificate.

Procedure

Have the customer:

1. Check whether the scanned document destination HTTP server is accessible from the PC.
2. Check whether the SSL server certificate of the scanned document destination HTTP server is registered in the device.
3. Check whether the SSL server certificate of the scanned document destination HTTP server is valid. For example, check the items that follow:
   - The certificate has not expired yet.
   - The time that is set in the device is correct.
   - It is not in the discard list.
   - The certificate path of the SSL server certificate and import any necessary CA certificate.
4. If the certificate is not registered in the scanned document destination HTTP server, disable the device certificate validation.
5. Obtain logs immediately after the error has occurred without turning the power off and on. Perform 2.6 Log RAP.
6. Contact Support with the required logs for further assistance.

018-570 HTTP Certificate Fail RAP

018-570 HTTP error - invalid client certificate.

Procedure

Have the customer:

1. Check whether the scanned document destination HTTP server is accessible from the PC.
2. Check whether the SSL client certificate is set correctly in the device.
3. Check whether a valid device certificate is registered in the scanned document destination HTTP server.
4. Obtain logs immediately after the error has occurred without turning the power off and on. Perform 2.6 Log RAP.
5. Contact Support with the required logs for further assistance.

018-571 Internal Error in Scan RAP

018-571 Scan network sending software internal error.

Procedure

1. Have the customer repeat the operation.
2. Obtain logs immediately after the error has occurred without turning the power off and on. Perform 2.6 Log RAP.
3. Contact Support with the required logs for further assistance.

018-587 File Duplication Fail RAP

018-587 File name conflict stop.

Procedure

1. Have the customer set File Name Conflict to other than Cancel Job.
2. Obtain logs immediately after the error has occurred without turning the power off and on. Perform 2.6 Log RAP.
3. Contact Support with the required logs for further assistance.

018-588 Scan Filing Policy Invalid RAP

018-588 Invalid filing policy.

Procedure

1. Advise the customer that when Add is selected for File Name Conflict, check that the file format is not set to Multi-page.
2. Obtain logs immediately after the error has occurred without turning the power off and on. Perform 2.6 Log RAP.
3. Contact Support with the required logs for further assistance.

018-589 NEXTNAME File Error RAP

018-589 NEXTNAMEDAT file access error.

Procedure

1. Advise the customer that when Add is selected for File Name Conflict, check that the NEXTNAME.DAT file is correct.
2. Obtain logs immediately after the error has occurred without turning the power off and on. Perform 2.6 Log RAP.
3. Contact Support with the required logs for further assistance.

018-590 Same Name Exists RAP

018-590 A file/folder with the same name was detected on the server.

Procedure

1. Have the customer perform the same operation again without multiple machines accessing the same folder in the same server.
2. Obtain logs immediately after the error has occurred without turning the power off and on. Perform 2.6 Log RAP.
3. Contact Support with the required logs for further assistance.

018-591 File Name Suffix Over Limit RAP

018-591 The scan file name has exceeded the suffix limit value.

Procedure

1. Have the customer change the file name/destination folder on the scan server. Else, move or delete the files in the destination folder.
2. Obtain logs immediately after the error has occurred without turning the power off and on. Perform 2.6 Log RAP.
3. Contact Support with the required logs for further assistance.

018-592, 018-593 Lock Folder Fail RAP

018-592 Scan lock folder creation failed.

018-593 Failed to delete the scan lock folder.

Procedure

Have the customer:

1. Check if a lock directory (*.LCK) remains in the transfer destination, delete it manually then retry the job.
2. Check whether there is a folder that has the same name as the specified name.
3. Obtain logs immediately after the error has occurred without turning the power off and on. Perform 2.6 Log RAP.
4. Contact Support with the required logs for further assistance.

018-595 Detected User Duplication RAP

018-595 Duplicate IDs were detected at ICCG external authentication (LDAP protocol).

Procedure

1. Have the customer make corrections so that the user entries in the database of the LDAP server do not have the same IC card information.
2. Obtain logs immediately after the error has occurred without turning the power off and on. Perform 2.6 Log RAP.
3. Contact Support with the required logs for further assistance.

018-596, 018-700 Network Error RAP

018-596 An undefined protocol error, and other errors with LDAP protocol.

018-700 Network stack is not initialized fail.

Procedure

1. Advise the customer to wait for a while, then perform the same operation again.
2. Obtain logs immediately after the error has occurred without turning the power off and on. Perform 2.6 Log RAP.
3. Contact Support with the required logs for further assistance.

018-701 to 018-705 LDAP Protocol Errors 01 to 05 RAP

018-701 LDAP protocol error 01 at address book operation (operation error).

018-702 LDAP protocol error 02 at address book operation (operation error).

018-703 LDAP protocol error 03 at address book operation.

018-704 LDAP protocol error 04 at address book operation (too many search results to be processed).

018-705 LDAP protocol error 05 at Address Book operation (comparison request result is false)

018-706 LDAP protocol error 06 at address book operation (comparison request result is true).

018-707 LDAP protocol error 07 at address book operation (the specified authentication method is not supported).

018-708 LDAP protocol error 08 at address book operation (strong authentication is required)

Procedure

1. Verify that print jobs are printing or print a configuration report and verify that network setup settings are indicated. The printer is operational or the configuration report indicates valid network settings.
2. Check for damage with the network connection. If there is no damage then there is a problem with the network. Inform the customer that the network requires service.
3. There is a problem with the LDAP setups on the machine or with the remote LDAP server. Have the customer verify the machine LDAP setups. If the check is good, there may be a problem with the remote LDAP server.
4. Refer to 2.4 NET System Status Fail; 2.4.2 [Not connected to network] or [Unable to find the device from the PC] for further instruction trroubleshooting network errors.

018-709 Active Communication is Unavailable Now Fail RAP

018-709 Active communication is unavailable now fail.

Procedure

1. In case of IPv4 environment, have the customer:
   a. Check whether the address that is being used as the IPv4 address of the device is undefined, or whether it has become the Auto IP address.
   b. Check if the network has been connected properly.
   c. Check with the network administrator on whether the DHCP server address has been exhausted.
2. In case of IPv6 environment, have the customer:
   a. Check whether the address that is being used as the IPv6 address of the device has been allocated with a global address that uses the network address distributed by the IPv6 router.
   b. Check if the network has been connected properly.
   c. Check with the network administrator on whether the IPv6 router has been configured correctly.
3. Obtain logs immediately after the error has occurred without turning the power off and on. Perform 2.6 Log RAP.
4. Contact Support with the required logs for further assistance.

018-710 to 018-714 LDAP Protocol Errors 10 to 14 RAP

018-710 LDAP protocol error 10 at address book operation (not registered in search range).

018-711 LDAP protocol error 11 at address book operation (admin limit is exceeded).

018-712 LDAP protocol error 12 at address book operation (extended function cannot be used).

018-713 LDAP protocol error 13 at address book operation (secrecy is required).

018-714 LDAP protocol error 14 at Address Book operation (SASL bind in progress).

Procedure

Verify that print jobs are printing or print a configuration report and verify that network setup settings are indicated. **The printer is operational or the configuration report indicates valid network settings.**

Y N

Check for damage with the network connection. If there is no damage then there is a problem with the network. Inform the customer that the network requires service.

There is a problem with the LDAP setups on the machine or with the remote LDAP server. Have the customer verify the machine LDAP setups. If the check is good, there may be a problem with the remote LDAP server.

1. Refer to 2.4 NET System Status Fail; 2.4.2 [Not connected to network] or [Unable to find the device from the PC] for further instruction trroubleshooting network errors.

018-715 Kerberos Attestation Protocol Error 73 RAP

018-715 Kerberos Attestation protocol error 73

Procedure

Advice the customer that:

1. If the error occurred in the case of smart card authentication, algorithm not supported by the device is specified by KDC.
2. In the case of password authentication, KDC does not support any of the device's algorithms.
3. KDC settings should be reviewed. Also, in the case of devices supporting FIPS, disabling FIPS mode may correct the problem.
4. Obtain logs immediately after the error has occurred without turning the power off and on. Perform 2.6 Log RAP.
5. Contact Support with the required logs for further assistance.

018-716 to 018-721 LDAP Protocol Errors 16 to 21 RAP

018-716 LDAP protocol error 16 at address book operation (the requested attribute does not exist).

018-717 LDAP protocol error 17 at address book operation (the specified attribute is not defined)

018-718 LDAP protocol error 18 at address book operation (unsuitable combination).

018-719 LDAP protocol error 19 at address book operation (limit violation).

018-720 LDAP protocol error 20 at address book operation (the specified attribute already exists)

018-721 The server returned RFC2251 standard result message 21 (syntax error of the specified attribute value) in response to the address book inquiry.

Procedure

Verify that print jobs are printing or print a configuration report and verify that network setup settings are indicated. **The printer is operational or the configuration report indicates valid network settings.**

Y **N**

Check for damage with the network connection. If there is no damage then there is a problem with the network. Inform the customer that the network requires service.

There is a problem with the LDAP setups on the machine or with the remote LDAP server. Have the customer verify the machine LDAP setups. If the check is good, there may be a problem with the remote LDAP server.

1. Refer to 2.4 NET System Status Fail; 2.4.2 [Not connected to network] or [Unable to find the device from the PC] for further instruction trroubleshooting network errors.

018-722 GCP Network Fail RAP

018-722 GCP network connection error.

Procedure

Perform the steps that follow:

1. Have the customer confirm the network connection status, network settings status with the system administrator.
2. Obtain the log file using the log tool. Perform 2.6 Log RAP
   - If there was a reboot after the error had occurred and hence was unable to obtain the log, set NVM (700-530) to'0' to perform log collection and return the NVM (700-530) to'1' after completing the procedure.
3. Change any possible mechanical settings for corrective actions or detection conditions and repeat the operation.
4. Check the version of Controller ROM. If it is not the latest, download and update to the latest software revision. (Refer to GP 9 Firmware Version Upgrade)
5. Turn the power off and on.Get the procedures for reproducing an error according to the operation that was performed when the error occurred.
   a. Check the exact occurrence timing during job execution.
   b. Check the job settings from the Panel.
   c. Collect other information as much as possible to reproduce the error.
6. Obtain logs immediately after the error has occurred without turning the power off and on. Perform 2.6 Log RAP, **the error persists**.
7. The ESS Board rarely fails, contact Technical Support for further instructions.

018-723, 018-740 GCP Certification Fail RAP

018-723 GCP certificate connection error.

018-740 Connection error of certificate has occurred during communication through XMPP protocol with Google server.

Procedure

Perform the steps that follow:

1. Have the customer confirm with the network administrator the correct root CA certificate is present, certificate authentication settings are correct .
2. Obtain the log file using the log tool. Perform 2.6 Log RAP
   - If there was a reboot after the error had occurred and hence was unable to obtain the log, set NVM (700-530) to'0' to perform log collection and return the NVM (700-530) to'1' after completing the procedure.
3. Change any possible mechanical settings for corrective actions or detection conditions and repeat the operation.
4. Check the version of Controller ROM. If it is not the latest, download and update to the latest software revision. (Refer to GP 9 Firmware Version Upgrade)
5. Turn the power off and on.Get the procedures for reproducing an error according to the operation that was performed when the error occurred.
   a. Check the exact occurrence timing during job execution.
   b. Check the job settings from the Panel.
   c. Collect other information as much as possible to reproduce the error.
6. Obtain logs immediately after the error has occurred without turning the power off and on. Perform 2.6 Log RAP, **the error persists**.
7. The ESS Board rarely fails, contact Technical Support for further instructions.

018-724 GCP SSL Connection Fail RAP

018-724 GCP SSL connection error.

Procedure

Perform the steps that follow:

1. Have the customer confirm with the network administrator the network (SSL Communication) connection status, SSL settings status.
2. Obtain the log file using the log tool. Perform 2.6 Log RAP
   - If there was a reboot after the error had occurred and hence was unable to obtain the log, set NVM (700-530) to'0' to perform log collection and return the NVM (700-530) to'1' after completing the procedure.
3. Change any possible mechanical settings for corrective actions or detection conditions and repeat the operation.
4. Check the version of Controller ROM. If it is not the latest, download and update to the latest software revision. (Refer to GP 9 Firmware Version Upgrade)
5. Turn the power off and on.Get the procedures for reproducing an error according to the operation that was performed when the error occurred.
   a. Check the exact occurrence timing during job execution.
   b. Check the job settings from the Panel.
   c. Collect other information as much as possible to reproduce the error.
6. Obtain logs immediately after the error has occurred without turning the power off and on. Perform 2.6 Log RAP, **the error persists**.
7. The ESS Board rarely fails, contact Technical Support for further instructions.

018-725 Kerberos Attestation Protocol Error 22 RAP

018-725 Duplicate IDs were detected at ICCG external authentication (LDAP protocol).

Procedure

Advise the customer that the user Kerbeors password set on the Kerbeors server has expired, it is necessary to ask the server administrator to extend the expiration date of it.

018-726 Kerberos Attestation Protocol Error 70 RAP

018-726 Duplicate IDs were detected at ICCG external authentication (LDAP protocol).

Procedure

Have the customer check if a higher CA certificate in the user SmartCard is registered with the device. If not, register it with the device.

018-727 Kerberos Attestation Protocol Error 71 RAP

018-727 The certificate in the user SmartCard is incorrect (rejected by the Kerbeors server).

Procedure

Have the customer check if the certificate in the user SmartCard is valid. If it has become invalid or expired, renew it, or if the Kerberos server prohibits the use of the certificate, it is necessary to ask the server administrator to authorise the server permit it.

018-728 Kerberos Attestation Protocol Error 72 RAP

018-728 The Kerbeors server KDC certificate is incorrect (the root CA certificate is not registered with the device; the KDC certificate has expired; or the KDC certificate address is different from that written on the certificate.)

Procedure

Have the customer:

1. Check if the root CA certificate of KDC certificate is registered with the device. If not, register the root CA certificate.
2. If the KDC certificate has expired, renew the Kerbeors server KDC certificate
3. Check that the Kerberos server address set on the device is the same as that written on the Kerbeors server KDC certificate. If they are different, change the Kerbeors server address set on the device, or check the Kerbeors server KDC certificate. In this case, there is a possibility of a wrong setting or Kerbeors server impersonation.

018-729, 730, 738, 739, 743, 744, 745, 746 GCP Network Fail RAP

018-729 GCP connection timeout error.

018-730 GCP other network error.

018-738 Network-related error has occurred during communication through XMPP protocol with Google server.

018-739 Network-related internal error has occurred during communication through XMPP protocol with Google server.

018-743 A network related (proxy connection) error has occurred when communicating with Google server via HTTP.

018-744 A network related (DNS name resolution) error has occurred when communicating with Google server via HTTP.

018-745 A network related (proxy connection) error has occurred when communicating with Google server via XMPP protocol.

018-746 A network related (DNS name resolution) error has occurred when communicating with Google server via XMPP protocol.

Procedure

Perform the steps that follow:

1. Have the customer check the network connection status, settings status as the network might be congested.
2. If the fault persists, Reload or update the Firmware, GP 9.
3. Obtain the log file using the log tool. Perform 2.6 Log RAP
   - If there was a reboot after the error had occurred and hence was unable to obtain the log, set NVM (700-530) to'0' to perform log collection and return the NVM (700-530) to'1' after completing the procedure.
4. Change any possible mechanical settings for corrective actions or detection conditions and repeat the operation.
5. Check the version of Controller ROM. If it is not the latest, download and update to the latest software revision. (Refer to GP 9 Firmware Version Upgrade)
6. Turn the power off and on.Get the procedures for reproducing an error according to the operation that was performed when the error occurred.
   a. Check the exact occurrence timing during job execution.
   b. Check the job settings from the Panel.
   c. Collect other information as much as possible to reproduce the error.
7. Obtain logs immediately after the error has occurred without turning the power off and on. Perform 2.6 Log RAP.
8. The ESS Board rarely fails, contact Technical Support for further instructions.

018-732 to 018-736 LDAP Protocol Errors 32 to 36 RAP

018-732 LDAP protocol error 32 at address book operation (applicable object does not exist).

018-733 LDAP protocol error 33 at address book operation (wrong alias).

018-734 LDAP protocol error 34 at address book operation (wrong DN format, wrong password).

018-735 LDAP protocol error 35 at address book operation (object is terminated).

018-736 LDAP protocol error 36 at address book operation (cannot refer to alias).

Procedure

Verify that print jobs are printing or print a configuration report and verify that network setup settings are indicated. **The printer is operational or the configuration report indicates valid network settings.**

Y **N**

Check for damage with the network connection. If there is no damage then there is a problem with the network. Inform the customer that the network requires service.

There is a problem with the LDAP setups on the machine or with the remote LDAP server. Have the customer verify the machine LDAP setups. If the check is good, there may be a problem with the remote LDAP server.

1. Refer to 2.4 NET System Status Fail for further instruction trroubleshooting network errors.

018-737, 018-741 GCP Other Fail RAP

018-737 Other internal error has occurred during GCP module processing.

018-741 Other internal error has occurred during GCP module (XMPP library) processing.

Procedure

Perform the steps that follow:

1. Have the customer check the settings.
2. Obtain the log file using the log tool. Perform 2.6 Log RAP
   - If there was a reboot after the error had occurred and hence was unable to obtain the log, set NVM (700-530) to'0' to perform log collection and return the NVM (700-530) to'1' after completing the procedure.
3. Change any possible mechanical settings for corrective actions or detection conditions and repeat the operation.
4. Check the version of Controller ROM. If it is not the latest, download and update to the latest software revision. (Refer to GP 9 Firmware Version Upgrade)
5. Turn the power off and on.Get the procedures for reproducing an error according to the operation that was performed when the error occurred.
   a. Check the exact occurrence timing during job execution.
   b. Check the job settings from the Panel.
   c. Collect other information as much as possible to reproduce the error.
6. Obtain logs immediately after the error has occurred without turning the power off and on. Perform 2.6 Log RAP.
7. The ESS Board rarely fails, contact Technical Support for further instructions.

018-747 Server Not Found in SMB RAP

018-747 Unable to find the SMB server during SMB scan.

Procedure

Have the customer:

1. **Check the Communication Environment:**

   Check that network communication between the transfer destination SMB server and this machine is available, by the performing the steps that follow:

   a. Network cable connection.
   b. If the transfer destination address is specified using IP Address, check whether the IP address is correct.
   c. Check with the System Administrator on whether the SMB related ports (*1) are blocked (whether there are blocked ports at the transfer destination server, between the MFD and the server, etc.)
2. **Check the SMB Server:**

   Check the network settings that follow to check if the computer operates as an SMB server:

   a. Whether the SMB related ports (*1) are blocked by software, such as anti-virus or a firewall, on the server.
3. **Check the Resolution Server Name:**

   Check the network settings that follows to check if the computer operates as an SMB server:

   a. For communication that goes beyond the subnet and the server name is 15 characters or shorter, check the WINS server settings and check whether the server name address can be resolved correctly.
4. If there is no problem, login to the SMB server from another PC using the same user name and check whether a file can be written to the same storage destination on that SMB server. If write is possible, try to perform the same operation again from the machine.
5. Obtain logs immediately after the error has occurred without turning the power off and on. Perform 2.6 Log RAP.
6. The ESS Board rarely fails, contact Technical Support for further instructions.

018-748, 018-750 to 018-754 LDAP Protocol Errors 48, 50 to 36 RAP

018-748 LDAP protocol error 48 at address book operation (authentication denied).

018-750 LDAP protocol error 49 at address book operation (the specified authentication certificate is invalid, login name is invalid).

018-751 LDAP protocol error 51 at address book operation (busy).

018-752 LDAP protocol error 52 at address book operation (cannot be processed).

018-753 LDAP protocol error 53 at address book operation (execution denied).

018-754 LDAP protocol error 54 at address book operation (loop detected).

Procedure

Verify that print jobs are printing or print a configuration report and verify that network setup settings are indicated. **The printer is operational or the configuration report indicates valid network settings.**

Y **N**

Check for damage with the network connection. If there is no damage then there is a problem with the network. Inform the customer that the network requires service.

There is a problem with the LDAP setups on the machine or with the remote LDAP server. Have the customer verify the machine LDAP setups. If the check is good, there may be a problem with the remote LDAP server.

018-749 LDAP Protocol Error 49 RAP

018-749 There is a LDAP (Lightweight Directory Access Protocol) error (Designated authentication certificate is invalid/Login name is invalid).

Procedure

Verify that print jobs are printing or print a configuration report and verify that network setup settings are indicated. **The printer is operational or the configuration report indicates valid network settings.**

Y **N**

Check for damage with the network connection. If there is no damage then there is a problem with the network. Tell the customer that the network requires service.

There is a problem with the LDAP setups on the machine or with the remote LDAP server.
Ask the customer to re-verify user name and password to be used for authentication to cancel incorrect search login name. Check with the network administrator to verify authentication setting of server side when the status is not improved. Verify the machine LDAP setups. If the check is OK, there may be a problem with the remote LDAP server.

018-755 Server Connection Error in SMB RAP

018-755 There is no response from the server and failed to establish TCP/IP session.

Procedure

Have the customer:

1. Check the transfer destination server, the router that exists between the multifunction device and the server, and the anti-virus software, firewall software, etc.
2. If there is no problem, login to the SMB server from another PC using the same user name and check whether a file can be written to the same storage destination on that SMB server. If write is possible, try to perform the same operation again from the machine.

   NOTE: *If the situation does not improve, it is highly likely that there is a problem occurring at the server.*

3. Obtain logs immediately after the error has occurred without turning the power off and on. Perform 2.6 Log RAP.
4. The ESS Board rarely fails, contact Technical Support for further instructions.

018-756 Server Login Response Timeout in SMB RAP

018-756 Unable to receive a response from the server within the specified time during the scanner (scan to PC) SMB authentication.

Procedure

Have the customer:

1. If the transfer destination server belongs to the Active Directory domain, check for delays in the communication between transfer destination server and Domain Controller by the method that follows:
   a. Check whether it is taking a long time to access the transfer destination server from a PC client.
   b. If it is taking a long time, consult with the System Administrator.
2. If there is no problem, login to the SMB server from another PC using the same user name and check whether a file can be written to the same storage destination on that SMB server. If write is possible, try to perform the same operation again from the machine.

   NOTE: *If the situation does not improve, there is a possibility of bad connection status in the customers environment. Advise them to consult with the System Administrator.*

3. Obtain logs immediately after the error has occurred without turning the power off and on. Perform 2.6 Log RAP.
4. The ESS Board rarely fails, contact Technical Support for further instructions.

018-757 Host Name Solution Error in SMB RAP

018-757 The system has failed to resolve the SMB server name of the SMB that is specified as the transfer destination during the scanner (scan to PC).

Procedure

Have the customer:

1. For communication that goes beyond the subnet, check the DNS server settings and check whether the server name address can be resolved correctly.
2. If there is no problem, login to the SMB server from another PC using the same user name and check whether a file can be written to the same storage destination on that SMB server. If write is possible, try to perform the same operation again from the machine.
3. Obtain logs immediately after the error has occurred without turning the power off and on. Perform 2.6 Log RAP, **the error persists**.
4. The ESS Board rarely fails, contact Technical Support for further instructions.

018-758, 018-759 Picture Preservation or File Name Error RAP

018-758 SMB Scan image storage location or file name error.

018-759 SMB Scan image storage location or file name error.

Procedure

Have the customer:

1. Check whether the storage location is correct.
2. Check whether the specified file name is one that can be created on the SMB server.
3. Check whether the storage destination or file name of the scan image that is set at the main unit contains restricted characters.
4. Obtain logs immediately after the error has occurred without turning the power off and on. Perform 2.6 Log RAP, **the error persists**.
5. The ESS Board rarely fails, contact Technical Support for further instructions.

018-760 DFS Link Error in SMB RAP

018-760 The specified storage location gets linked to other shared folder during scanner (scan to PC) SMB transfer as it is set to Distributed File System (DFS).

Procedure

1. Have the customer check the settings of the distributed file system (DFS) with the system administrator
2. Obtain logs immediately after the error has occurred without turning the power off and on. Perform 2.6 Log RAP.
3. The ESS Board rarely fails, contact Technical Support for further instructions.

018-761 Out of Server Memory in SMB RAP

018-761 The memory at the storage destination PC was detected to have ran out during scanner (scan to PC) SMB transfer.

Procedure

Have the customer:

1. Check whether the usage condition at the storage destination PC has caused all the memory to be used.
2. Terminate the applications that are currently not in use.
3. Check the memory usage status and perform upgrades to increase the memory.
4. Reboot the server.
5. Obtain logs immediately after the error has occurred without turning the power off and on. Perform 2.6 Log RAP.
6. The ESS Board rarely fails, contact Technical Support for further instructions.

018-762 Server Response Timeout in SMB RAP

018-762 The response from the storage destination PC has taken a long time and caused a timeout during scanner (scan to PC) SMB transfer.

Procedure

Have the customer:

1. Check whether an anti-virus software is operating at the storage destination PC. If operating, reduce the number of document copies to make the transmission file smaller.
2. Check that there is no cable unplugged or any issues with the router or the hub in the network route.
3. Obtain logs immediately after the error has occurred without turning the power off and on. Perform 2.6 Log RAP.
4. The ESS Board rarely fails, contact Technical Support for further instructions.

018-763 Character Convert Error in SMB RAP

018-763 The character code conversion process in the multifunction device has failed during the scanner (scan to PC) SMB transfer.

Procedure

Have the customer:

1. Check whether the server name, shared name, path name, etc. contains machine-dependent characters such as (special symbol), (number symbol), IV (roman numeral), and etc.
2. If it contains any machine-dependent characters, edit it so that the name no longer contain any and operate.
3. Obtain logs immediately after the error has occurred without turning the power off and on. Perform 2.6 Log RAP.
4. The ESS Board rarely fails, contact Technical Support for further instructions.

018-764, 765, 766, 767. 768, 769, 771 LDAP Protocol Errors RAP

018-764 LDAP protocol error 64 at address book operation (naming violation).

018-765 LDAP protocol error 65 at address book operation (object class specification error).

018-766 LDAP protocol error 66 at address book operation (entries other than termination cannot be executed).

018-767 LDAP protocol error 67 at Address Book operation (cannot be executed at RDN).

018-768 LDAP protocol error 68 at address book operation (the specified entry already exists).

018-769 LDAP protocol error 69 at address book operation (object class cannot be changed).

018-771 LDAP protocol error 71 at address book operation (influence on multiple DSA).

Procedure

Verify that print jobs are printing or print a configuration report and verify that network setup settings are indicated. **The printer is operational or the configuration report indicates valid network settings.**

Y **N**

Check for damage with the network connection. If there is no damage then there is a problem with the network. Inform the customer that the network requires service.

There is a problem with the LDAP setups on the machine or with the remote LDAP server. Have the customer verify the machine LDAP setups. If the check is good, there may be a problem with the remote LDAP server.
Refer to 2.4 NET System Status Fail for further instructions.

018-770 LDAP Protocol Error 70 RAP

018-770 LDAP protocol error 70 at Address Book operation (search target is too large).

Procedure

Verify that print jobs are printing or print a configuration report and verify that network setup settings are indicated. **The printer is operational or the configuration report indicates valid network settings.**

Y **N**

Check for damage with the network connection. If there is no damage then there is a problem with the network. Tell the customer that the network requires service.

Ask the customer to retry search with narrower search target by changing search condition/search start position in Address Book internal data. If the check is OK, there may be a problem with the remote LDAP server.
Refer to 2.4 NET System Status Fail for further instructions.

018-772 Shared Name Not Found in Server RAP

018-772 The shared name that was set does not exist on the transfer destination server during scanner (scan to PC) SMB transfer.

Procedure

Have the customer check whether the shared name that is set at the main unit exists on the transfer destination PC.

018-773 Shared Name Error in Server RAP

018-773 Invalid shared name at the SMB scan server.

Procedure

Have the customer:

1. Check whether the shared name that is set at the main unit contains restricted characters.
2. Check whether the beginning or the end of the shared name that is set at the main unit contain any blank space.
3. Check whether the shared name that is set at the main unit is only specified by a period.
4. If the transfer destination is a Macintosh, the permission setting must be changed for the user of the shared folder. For the settings, check with the System Administrator.
5. Obtain logs immediately after the error has occurred without turning the power off and on. Perform 2.6 Log RAP.
6. Contact Support with the required logs for further assistance.

018-780 to 018-784 LDAP Protocol Errors 80 and 82 to 84 RAP

018-780 LDAP protocol error 80 at address book operation (an unknown error has occurred).

018-782 LDAP protocol error 82 at address book operation (program error or SASL authentication error).

018-783 LDAP protocol error 83 at address book operation (outgoing message encoding error).

018-784 LDAP protocol error 84 at address book operation (incoming message decoding error).

Procedure

Verify that print jobs are printing or print a configuration report and verify that network setup settings are indicated. **The printer is operational or the configuration report indicates valid network settings.**

Y **N**

Check for damage with the network connection. If there is no damage then there is a problem with the network. Inform the customer that the network requires service.

There is a problem with the LDAP setups on the machine or with the remote LDAP server. Have the customer verify the machine LDAP setups. If the check is good, there may be a problem with the remote LDAP server.

Refer to 2.4 NET System Status Fail for further instructions.

018-781 LDAP Protocol Error 81 RAP

018-781 LDAP protocol error 81 at address book operation (cannot connect to server).

Procedure

Have the customer:

1. Check if the network cable is connected.
2. If it is connected, check the start up state of the target request server.
3. Check whether the shared name that is set at the main unit is only specified by a period.
4. Check that the server name is correct.
5. Refer to 2.4 NET System Status Fail for further instructions.

018-785 LDAP Protocol Error 85 RAP

018-785 LDAP protocol error 85 at address book operation (search timeout).

Procedure

Verify that print jobs are printing or print a configuration report and verify that network setup settings are indicated. **The printer is operational or the configuration report indicates valid network settings.**

Y **N**

Check for damage with the network connection. If there is no damage then there is a problem with the network. Tell the customer that the network requires service.

Ask the customer to retry search with narrower search target by changing search condition/search start position in Address Book internal data. Ask the customer to verify the machine LDAP setups. If the check is OK, there may be a problem with the remote LDAP server.
Refer to 2.4 NET System Status Fail for further instructions.

018-786 to 797 LDAP Protocol Errors 86 to 97 RAP

018-786 LDAP protocol error 86 at address book operation (an unknown authentication method has been specified).

018-787 LDAP protocol error 87 at address book operation (mistake in definition of search filter).

018-788 LDAP protocol error 88 at address book operation (instruction canceled).

018-789 LDAP protocol error 89 at address book operation (an incorrect parameter was passed).

018-790 LDAP protocol error 90 at address book operation (insufficient memory).

018-791 LDAP protocol error 91 at address book operation (server connection prohibited).

018-792 LDAP protocol error 92 at address book operation (unsupported function).

018-793 LDAP protocol error 93 at address book operation (result is not returned).

018-794 LDAP protocol error 94 at address book operation (result no longer exist).

018-795 LDAP protocol error 95 at address book operation (result still exist).

018-796 LDAP protocol error 96 at address book operation (client loop detected).

018-797 LDAP protocol error 97 at address book operation (maximum hop number for reference is exceeded).

Procedure

Verify that print jobs are printing or print a configuration report and verify that network setup settings are indicated. **The printer is operational or the configuration report indicates valid network settings.**

Y **N**

Check for damage with the network connection. If there is no damage then there is a problem with the network. Inform the customer that the network requires service.

There is a problem with the LDAP setups on the machine or with the remote LDAP server. Have the customer verify the machine LDAP setups. If the check is good, there may be a problem with the remote LDAP server.
Refer to 2.4 NET System Status Fail for further instructions.

021-210, 211, 212 USB IC Card Reader Error RAP

021-210 USB IC card reader connection status error.

021-211 The USB IC card reader is broken.

021-212 USB IC card reader activation failure.

Procedure

WARNING

Ensure that the electricity to the machine is switched off while performing tasks that do not need electricity. Refer to GP 4. Disconnect the power cord. Electricity can cause death or injury. Moving parts can cause injury.

Perform the steps that follow:

1. Switch off then switch on the machine, GP 4.
2. Check the wiring between the card reader and the machine.
3. Enter dC131. Make sure NVM value 700-885 is set correctly:
   - Internal IC card reader: 0
   - IC card reader (HID support): 1
4. If the fault persists, advise the customer that the card reader is faulty.

021-214 USB IC Card Reader Encryption Setting RAP

021-214 Failure in the USB IC card reader encryption settings.

Procedure

Perform the steps that follow:

1. Switch off then switch on the machine, GP 4.
2. Advise the customer that the encryption settings of the connected USB IC card reader are wrong. Connect an USB IC card reader that has never been used before, or one that has had its encryption settings initialized as factory default settings to the machine.
3. Switch off then switch on the machine GP 4.

021-401 USB IC Card Reader Connection Error RAP

021-401 USB IC card reader connection status is incorrect.

Procedure

WARNING

Ensure that the electricity to the machine is switched off while performing tasks that do not need electricity. Refer to GP 4. Disconnect the power cord. Electricity can cause death or injury. Moving parts can cause injury.

Perform the steps that follow:

1. Switch off then switch on the machine, GP 4.
2. Advise the customer to disconnect the USB IC card reader that caused this error to occur from the USB connector.

021-505, 021-506 SSL Error RAP

021-505 Couldn't establish SSL session - An error has occurred during SSL/TLS handshake. libcURL returned "CURLE_SSL_CONNECT_ERROR"

021-506 The SSL certificate of the server is invalid.

Procedure

1. Switch off then switch on the machine, GP 4.
2. Perform 2.6 Log and contact Support for further assistance.

021-509, 515, 516, 522 Invalid Message Detected RAP

021-509 The server detected an invalid message.

021-515 Invalid product code.

021-516 Invalid serial number.

021-522 Certificate library error.

Procedure

1. Switch off then switch on the machine GP 4.
2. Perform 2.6 Log and contact Support for further assistance.

021-523 Internal Error RAP

021-523 Software failure where processing can still continue was detected.

Procedure

Perform the steps that follow:

1. If the SOAP port has stopped, have the customer restart it.
2. Switch off then switch on the machine GP 4.
3. Perform 2.6 Log and contact Support for further assistance.

021-524 to 012-528 Communications Error RAP

021-524 Installation status mismatch.

021-525 Recall status mismatch.

021-526 Communication library error.

021-527 Invalid communication message (edge server).

021-528 Communication setting error.

Procedure

1. If the problem persists, use Chain-Link (920-001) to change “Installation Status” to “Not Installed” and retry the operation.
2. Switch off then switch on the machine GP 4.
3. Perform 2.6 Log and contact Support for further assistance.

021-533, 534 Unsupported ROM Set RAP

021-533 The user cannot do an update.

021-534 An unsupported submodule is detected.

Procedure

Reload the software, GP 9.

023-500 UI ROM Download Fail RAP

023-500 Panel ROM data write processing error detection.

Procedure

WARNING

Ensure that the electricity to the machine is switched off while performing tasks that do not need electricity. Refer to GP 4. Disconnect the power cord. Electricity can cause death or injury. Moving parts can cause injury.

Perform the steps that follow:

1. Reload the software, GP 9.
2. Install a new UI assembly, REP 1.1.1

023-600, 023-601 UI Key Error RAP

023-600 A hard key on the panel has been found to be held down for one or more consecutive minutes.

023-601 The touch panel has been found to be held down for one or more consecutive minutes.

Procedure

For information only, no service action necessary.

024-312, 313, 314, 315 IOT NVM Backup Restore RAP

024-312 IOT NVM Backup Restore Fail 2 - It was detected that the identifiers (Product No., Serial No.) of the backed up IOT NVM Data were different from those instructed by the restore request.

024-313 IOT NVM Backup Restore Fail 3 - It was detected that the data size of the backed up IOT NVM Data was different from the size instructed by the restore request.

024-314 IOT NVM Backup Restore Fail 4 - A backup data read error was detected.

024-315 IOT NVM Backup Restore Fail 5 - When restore was requested, it was detected that the backup data did not exist.

Procedure

WARNING

Ensure that the electricity to the machine is switched off while performing tasks that do not need electricity. Refer to GP 4. Disconnect the power cord. Electricity can cause death or injury. Moving parts can cause injury.

Perform the steps that follow:

1. Switch off then switch on the machine GP 4.
2. Install a new MCU Board REP 18.1.1 (MFP), REP 18.5.1 (SFP)

024-340 to 024-360 IOT-ESS Communication Fail 1 RAP

024-340 MCU sending error detected by controller (invalid parameter was used).

024-341 MCU sending error detected by controller (sequence number error).

024-342 MCU sending error detected by controller (packet number error).

024-343 MCU sending error detected by controller (message length error).

024-345 MCU sending error detected by controller (check code error).

024-346 MCU sending error detected by controller (parity error detected by the IOT.

024-347 MCU sending error detected by controller (framing error detected by the IOT).

024-348 MCU sending error detected by controller (overrun error detected by the IOT).

024-349 MCU sending error detected by controller (receive abort detected by the IOT after the header had been recognized).

024-350 MCU receiving error detected by controller (sequence number of the received message packet is incorrect).

024-351 MCU receiving error detected by controller (packet number error).

024-352 MCU receiving error detected by controller (message length error).

024-353 MCU receiving error detected by controller (check code error).

024-354 MCU receiving error detected by controller (parity error detected by the UART).

024-355 MCU receiving error detected by controller (framing error detected by the UART).

024-356 MCU receiving overrun error detected by controller (overrun error detected by the UART).

024-357 MCU receiving error detected by controller (receiving abort detected after the header had been recognized).

024-358 Print sequence error detected by controller (paper feed and paper output that are not applicable to the number detected.)

024-359 MCU transmission receiving error detected by controller (invalid parameter used).

024-360 Initialization error between IOT and ESS.

Procedure

WARNING

Ensure that the electricity to the machine is switched off while performing tasks that do not need electricity. Refer to GP 4. Disconnect the power cord. Electricity can cause death or injury. Moving parts can cause injury.

Perform the steps that follow:

1. Switch off then switch on the machine, perform 2.6 Log GP 4.
2. Perform Hardware Diagnostic using the LONGDIAG MODE in the Special Booting Menu. (Refer to [2.8 Special Booting])
3. Verify the wire harness connections on the ESS Board and MCU Board are installed properly and fully seated.
4. Obtain the log file using the log tool. Perform the 2.6 Log RAP
   - If there was a reboot after the error had occurred and hence was unable to obtain the log, set NVM (700-530) to “0” to perform log collection and return the NVM (700-530) to “1” after completing the procedure.
5. Check the version of Controller ROM. If it is not the latest, download and update to the latest software revision. (Refer to Firmware Version Upgrade GP 4.)
6. Switch the power off then on.

   7.The error persists after turning the power off and on GP 4, obtain the log file using the log tool. Perform the 2.6 Log RAP
8. Turn off the Power GP 4, unplug the power cord for 2 minutes, then turn on the Power again GP 4 to perform the same operation where the error occurred.
9. If the problem is related to the Net such as Scanner/Printer, proceed to the following for collecting data.
10. Install a new MCU Board REP 18.1.1(MFP) REP 18.5.1(SFP) and perform the same operation where the error occurred.

024-361 Invalid IOT Paper Size RAP

024-361 Invalid IOT paper size group information.

Procedure

WARNING

Ensure that the electricity to the machine is switched off while performing tasks that do not need electricity. Refer to GP 4. Disconnect the power cord. Electricity can cause death or injury. Moving parts can cause injury.

Perform the steps that follow:

1. Initialize the user NVM, refer to dC301 NVM Initialization.
2. Check the paper size group setting in the Controller and set a correct value.
3. Obtain the log file using the log tool. Perform the 2.6 Log RAP
   - If there was a reboot after the error had occurred and hence was unable to obtain the log, set NVM (700-530) to “0” to perform log collection and return the NVM (700-530) to “1” after completing the procedure.
4. Change any possible mechanical settings for corrective actions or detection conditions and repeat the operation.
5. Check the version of Controller ROM. If it is not the latest, download and update to the latest software revision. (Refer to GP 9 Firmware Version Upgrade)
6. Switch the power off then on.Get the procedures for reproducing an error according to the operation that was performed when the error occurred.
   a. Check the exact occurrence timing during job execution.
   b. Check the job settings from the Panel.
   c. Collect other information as much as possible to reproduce the error.
7. Obtain logs immediately after the error has occurred without turning the power off and on. Perform the 2.6 Log RAP.
8. The ESS Board rarely fails, contact Support for further instructions.

024-362, 024-363 Page Sync Illegal Start or Stop RAP

024-362 Page-sync occurred before video output preparation completes.

024-363 Page-sync completion error during video output.

Procedure

WARNING

Ensure that the electricity to the machine is switched off while performing tasks that do not need electricity. Refer to GP 4. Disconnect the power cord. Electricity can cause death or injury. Moving parts can cause injury.

Perform the steps that follow:

1. Switch off then switch on the machine GP 4.
2. Ensure that all connectors on the MCU Board, PL 18.1 Item 1 (MFP), PL 18.5 Item 1 (SFP), and the ESS Board, PL 18.1 Item 5 (MFP), PL 18.5 Item 5 (SFP), are securely connected. Make sure all surface mounted modules on both PWBs are securely connected.
3. Check the version of Controller ROM. If it is not the latest, download and update to the latest software revision GP 9.
4. Perform Hardware Diagnostic using the LONGDIAG MODE in the Special Boot Menu GP 15.
5. Obtain the log file using the log tool. Refer to 2.6 Log
   - If there was a reboot after the error had occurred and hence was unable to obtain the log, set NVM (700-530) to “0” to perform log collection and return the NVM (700-530) to “1” after completing the procedure.
6. Switch off then switch on the machine GP 4. The error persists after turning the power off and on, obtain the log file using the log tool. Refer to 2.6 Log.
7. Power down the machine GP 4, unplug the power cord for 2 minutes, then turn on the power the machine back up and perform the same operation where the error occurred.
8. If the problem is related to the Net such as Scanner/Printer, proceed to the following for collecting data. Refer to 2.4.4 Printing can be performed but abnormally.
9. Install a new MCU Board REP 18.1.1(MFP) REP 18.5.1(SFP) and perform the same operation where the error occurred.
10. Install a new ESS Board REP 18.1.2 (MFP), REP 18.5.2 (SFP) and perform the same operation where the error occurred.
11. Reinstall the original ESS Board and contact Support for instructions.

024-364 DMA Transfer Fail RAP

024-364 During Reduce/Enlarge, reduction/enlargement was not completed even though the specified data was entered. This is probably caused by the SW failure or garbage data Loop-back write over- flow.

Procedure

1. Switch off then switch on the machine GP 4.
2. Download and update to the latest software revision. (Refer to Firmware Version Upgrade GP 9.)
3. Install a new ESS Board REP 18.1.2 (MFP), REP 18.5.2 (SFP)

024-365 Overflow on Loop Back Write RAP

024-365 Loopback write overflow.

Procedure

This fault is currently not displayed. No service action necessary.

024-366 JBIG Library Other Fail RAP

024-366 Other errors in JBIG Lib.

Procedure

1. Switch off then switch on the machine GP 4.
2. Download and update to the latest software revision. (Refer to Firmware Version Upgrade GP 9.)
3. Install a new ESS Board REP 18.1.2 (MFP), REP 18.5.2 (SFP)

024-367 Decompress Other Fail RAP

024-367 Incorrect line synchronization was detected.

Initial Actions

Collect the detailed procedures below from the customer when a trouble occurred.

1. In which mode the problem occur? (Copy/Scan/Print/Fax)
2. What job was performed when the problem occurred?
3. Check the job settings from the UI.
4. Collect other information as much as possible to reproduce the error.
   - For Jobs that went through a network, also collect the output report and the network configuration.
   - For Print, also obtain the PRN file of the Job if possible.

Procedure

WARNING

Ensure that the electricity to the machine is switched off while performing tasks that do not need electricity. Refer to GP 4. Disconnect the power cord. Electricity can cause death or injury. Moving parts can cause injury.

Perform the steps that follow:

1. Switch off then switch on the machine GP 4.
2. Check the version of Controller ROM. If it is not the latest, download and update to the latest software revision. (Refer to Firmware Version Upgrade GP 4.)
3. Obtain the log file using the log tool. Perform the 2.6 Log RAP
   - If there was a reboot after the error had occurred and hence was unable to obtain the log, set NVM (700-530) to “0” to perform log collection and return the NVM (700-530) to “1” after completing the procedure.
4. Perform Hardware Diagnostic using the LONGDIAG MODE in the Special Booting Menu. (Refer to [2.8 Special Booting])
5. Switch off then switch on the machine GP 4, immediately obtain the log file using the log tool. Perform the 2.6 Log RAP
6. Power down the machine, unplug the power cord for 2 minutes, then power up the machine, and perform the same operation where the error occurred.
7. Install a new ESS Board REP 18.1.2 (MFP), REP 18.5.2 (SFP) and perform the same operation where the error occurred.
8. Reinstall the original ESS Board and contact the Support Department for instructions.

024-368 PCI Error RAP

024-368 PCI access error occurred due to a faulty PCI bus.

Initial Actions

Collect the detailed procedures below from the customer when a trouble occurred.

1. In which mode the problem occur? (Copy/Scan/Print/Fax)
2. What job was performed when the problem occurred?
3. Check the job settings from the UI.
4. Collect other information as much as possible to reproduce the error.
   - For Jobs that went through a network, also collect the output report and the network configuration.
   - For Print, also obtain the PRN file of the Job if possible.

Procedure

WARNING

Ensure that the electricity to the machine is switched off while performing tasks that do not need electricity. Refer to GP 4. Disconnect the power cord. Electricity can cause death or injury. Moving parts can cause injury.

Perform the steps that follow:

1. Switch off then switch on the machine GP 4.
2. Check the version of Controller ROM. If it is not the latest, download and update to the latest software revision. (Refer to Firmware Version Upgrade GP 4.)
3. Obtain the log file using the log tool. Perform the 2.6 Log RAP
   - If there was a reboot after the error had occurred and hence was unable to obtain the log, set NVM (700-530) to “0” to perform log collection and return the NVM (700-530) to “1” after completing the procedure.
4. Perform Hardware Diagnostic using the LONGDIAG MODE in the Special Booting Menu. (Refer to [2.8 Special Booting])
5. Switch off then switch on the machine GP 4, immediately obtain the log file using the log tool, 2.6 Log RAP
6. Power down the machine, unplug the power cord for 2 minutes, then power up the machine, and perform the same operation where the error occurred.
7. Install a new ESS Board REP 18.1.2 (MFP), REP 18.5.2 (SFP) and perform the same operation where the error occurred.
8. Reinstall the original ESS Board and contact the Support Department for instructions.

024-370 Marker Code Detection Fail RAP

024-368 During Enlarge, when the file was enlarged only by the specified size, the end code (FF02) cannot be found in the compressed data.

Initial Actions

Collect the detailed procedures below from the customer when a trouble occurred.

1. In which mode the problem occur? (Copy/Scan/Print/Fax)
2. What job was performed when the problem occurred?
3. Check the job settings from the UI.
4. Collect other information as much as possible to reproduce the error.
   - For Jobs that went through a network, also collect the output report and the network configuration.
   - For Print, also obtain the PRN file of the Job if possible.

Procedure

WARNING

Ensure that the electricity to the machine is switched off while performing tasks that do not need electricity. Refer to GP 4. Disconnect the power cord. Electricity can cause death or injury. Moving parts can cause injury.

Perform the steps that follow:

1. Switch off then switch on the machine GP 4.
   a. Change the Print mode (Normal/High Quality/High Resolution).
   b. Change the RAM size. (Change the port settings or the receive buffer size, etc.)
2. Switch off then switch on the machine GP 4.
3. Check the version of Controller ROM. If it is not the latest, download and update to the latest software revision. (Refer to Firmware Version Upgrade GP 4.)
4. Obtain the log file using the log tool. Perform the 2.6 Log RAP
   - If there was a reboot after the error had occurred and hence was unable to obtain the log, set NVM (700-530) to “0” to perform log collection and return the NVM (700-530) to “1” after completing the procedure.
5. Perform Hardware Diagnostic using the LONGDIAG MODE in the Special Booting Menu. (Refer to [2.8 Special Booting])
6. Switch off then switch on the machine GP 4, immediately obtain the log file using the log tool, 2.6 Log RAP
7. Power down the machine, unplug the power cord for 2 minutes, then power up the machine, and perform the same operation where the error occurred.
8. Ensure that all connectors on the MCU Board, PL 18.1 Item 1 (MFP), PL 18.5 Item 1 (SFP), and the ESS Board, PL 18.1 Item 5 (MFP), PL 18.5 Item 5 (SFP), are securely connected. Make sure all surface mounted modules on both PWBs are securely connected.
9. Install a new ESS Board REP 18.1.2 (MFP), REP 18.5.2 (SFP) and perform the same operation where the error occurred.
10. Install a new MCU Board REP 18.1.1(MFP) REP 18.5.1(SFP) and perform the same operation where the error occurred.
11. Reinstall the original ESS Board and contact Support for instructions.

024-371 to 024-373, 024-375 IOT-ESS Communication Fail 2 RAP

024-371 Communication between the ESS and IOT has not been established.

024-372 Sending error detected by the controller (incorrect parameter instruction).

024-373 DLL communication failure recovery error detected by the controller.

024-375 DLL receiving error detected by the controller (incorrect parameter instruction).

Procedure

WARNING

Ensure that the electricity to the machine is switched off while performing tasks that do not need electricity. Refer to GP 4. Disconnect the power cord. Electricity can cause death or injury. Moving parts can cause injury.

Perform the steps that follow:

1. Switch off then switch on the machine, perform 2.6 Log GP 10.
2. Ensure that all connectors on the MCU Board, PL 18.1 Item 1 (MFP), PL 18.5 Item 1 (SFP), and the ESS Board, PL 18.1 Item 5 (MFP), PL 18.5 Item 5 (SFP), are securely connected. Make sure all surface mounted modules on both PWBs are securely connected.
3. Reload the software, GP 4.
4. If the fault persists, install new components as necessary:
   - MCU Board, REP 18.1.1 (MFP), REP 18.5.1 (SFP).
   - ESS Board, REP 18.5.1 (MFP)., REP 18.5.5 (SFP).

024-376 IOT-ESS Communication Fail 25 RAP

024-376 Occurs when a break in connection is detected at the loop back terminal of the image signal line.

Procedure

WARNING

Ensure that the electricity to the machine is switched off while performing tasks that do not need electricity. Refer to GP 4. Disconnect the power cord. Electricity can cause death or injury. Moving parts can cause injury.

Perform the steps that follow:

1. Switch off then switch on the machine, perform 2.6 Log.
2. Ensure that all connectors on the MCU Board, PL 18.1 Item 1 (MFP), PL 18.5 Item 1 (SFP) and the ESS Board, PL 18.1 Item 5 (MFP), PL 18.5 Item 5 (SFP) are securely connected. Make sure all surface mounted modules on both PWBs are securely connected.
3. Verify the LPH Unit Image Signal disconnection (cable) is fully seated at the imaging unit LPH PL 2.1 Item 1 and the ESS Board, PL 18.1 Item 5 (MFP), PL 18.5 Item 5 (SFP).
4. Switch off then switch on the machine GP 4.
5. Ensure that all connectors on the MCU Board, PL 18.1 Item 1 (MFP), PL 18.5 Item 1 (SFP), and the ESS Board, PL 18.1 Item 5 (MFP), PL 18.5 Item 5 (SFP), are securely connected. Make sure all surface mounted modules on both PWBs are securely connected.
6. Check the version of Controller ROM. If it is not the latest, download and update to the latest software revision. (Refer to Firmware Version Upgrade GP 9.)
7. Perform Hardware Diagnostic using the LONGDIAG MODE in the Special Booting Menu. (Refer GP 15 Special Boot Menu)
8. Obtain the log file using the log tool. Perform the 2.6 Log RAP
   - If there was a reboot after the error had occurred and hence was unable to obtain the log, set NVM (700-530) to “0” to perform log collection and return the NVM (700-530) to “1” after completing the procedure.
9. Switch off then switch on the machine GP 4. The error persists after turning the power off and on, immediately obtain the log file using the log tool. Perform the 2.6 Log RAP
10. Power down the machine GP 4, unplug the power cord for 2 minutes, then turn on the power the machine back up and perform the same operation where the error occurred.
11. If the problem is related to the Net such as Scanner/Printer, proceed to the following for collecting data.
12. Install a new MCU Board REP 18.1.1(MFP) REP 18.5.1(SFP) and perform the same operation where the error occurred.
13. Install a new ESS Board REP 18.1.2 (MFP), REP 18.5.2 (SFP) and perform the same operation where the error occurred.
14. Reinstall the original ESS Board and contact Support for instructions.

024-600 to 024-614 Counter Repair RAP

024-600 The billing master counter is automatically repaired.

024-601 The billing backup counter 1 is automatically repaired.

024-602 The billing backup counter 2 is automatically repaired.

024-603 The SW key master counter is automatically repaired.

024-604 The SW key backup counter 1 is automatically repaired.

024-605 The SW key backup counter 2 is automatically repaired.

024-606 Billing meter type is automatically repaired (ESS SEEP repaired).

024-607 Billing meter type is automatically repaired (ESS NVM repaired).

024-608 Billing meter type is automatically repaired (IOT NVM repaired).

024-609 Billing count type is automatically repaired (ESS SEEP repaired).

024-610 Billing count type is automatically repaired (ESS NVM repaired).

024-611 Billing count type is automatically repaired (IOT NVM repaired).

024-612 Modal break point is automatically repaired (ESS SEEP repaired).

024-613 Modal break point is automatically repaired (ESS NVM repaired).

024-614 Modal break point is automatically repaired (IOT NVM repaired).

Procedure

For information only, no service action necessary.

024-615 IOT Unsupported Drum Shut Off RAP

024-615 IOT unsupported drum shut off.

Procedure

For information only, no service action necessary.

024-616 to 024-618 Serial Number RAP

024-616 Serial No Master Restore - Serial No. Master was restored automatically.

024-617 Serial No Backup1 Restore - Serial No. Backup1 was restored automatically.

024-618 Serial No Backup2 Restore - Serial No. Backup2 was restored automatically.

Procedure

For information only, no service action necessary.

024-619 to 024-621 Product Number RAP

024-619 Product No Master Restore - Product No. Master was restored automatically.

024-620 Product No Backup1 Restore - Product No. Backup1 was restored automatically.

024-621 Product No Backup2 Restore - Product No. Backup2 was restored automatically.

Procedure

For information only, no service action necessary.

024-701 Invalid Instruction of Face Inversion RAP

024-701 Job cancellation due to invalid invert instruction.

Procedure

Refer the customer the User Guide to use paper or media that is within specification.

024-702 Paper Jam RAP

024-702 Job cancellation due to paper jam.

Procedure

Clear the paper jam.

024-705 Forced Annotation Template Fail RAP

024-705 The specified Force Annotation template cannot be found in the device

Procedure

1. Delete document and attempt to restore the template from the driver.
2. Obtain the log file using the log tool. Perform the 2.6 Log RAP
   - If there was a reboot after the error had occurred and hence was unable to obtain the log, set NVM (700-530) to “0” to perform log collection and return the NVM (700-530) to “1” after completing the procedure.
3. Change any possible mechanical settings for corrective actions or detection conditions and repeat the operation.
4. Check the version of Controller ROM. If it is not the latest, download and update to the latest software revision. (Refer to Firmware Version Upgrade GP 9)
5. Switch the power off then on.Get the procedures for reproducing an error according to the operation that was performed when the error occurred.
   a. Check the exact occurrence timing during job execution.
   b. Check the job settings from the Panel.
   c. Collect other information as much as possible to reproduce the error.
6. Obtain logs immediately after the error has occurred without turning the power off and on. Perform the 2.6 Log RAP.
7. The ESS Board rarely fails, contact Support for further instructions.

024-707 Duplex Inversion Prohibited (Duplex) RAP

024-707 A duplex print instruction was received for duplex/invert prohibited paper.

Procedure

Perform the steps that follow:

1. Advise the customer to use paper that is within specification or to print simplex. Refer to GP 15 Paper and Media Size Specifications.
2. Obtain the log file using the log tool. Perform the 2.6 Log RAP
   - If there was a reboot after the error had occurred and hence was unable to obtain the log, set NVM (700-530) to “0” to perform log collection and return the NVM (700-530) to “1” after completing the procedure.
3. Change any possible mechanical settings for corrective actions or detection conditions and repeat the operation.
4. Check the version of Controller ROM. If it is not the latest, download and update to the latest software revision. (Refer to GP 9 Firmware Version Upgrade)
5. Switch the power off then on.Get the procedures for reproducing an error according to the operation that was performed when the error occurred.
   a. Check the exact occurrence timing during job execution.
   b. Check the job settings from the Panel.
   c. Collect other information as much as possible to reproduce the error.
6. Obtain logs immediately after the error has occurred without turning the power off and on. Perform the 2.6 Log RAP.
7. The ESS Board rarely fails, contact Support for further instructions.

024-708 Duplex Inversion Prohibited (Face Down) RAP

024-708 A face down output instruction was received for duplex/invert prohibited paper.

Procedure

Perform the steps that follow:

1. Advise the customer to use paper that is within specification or to print face up. Refer to GP 15 Paper and Media Size Specifications.
2. Obtain the log file using the log tool. Perform the 2.6 Log RAP
   - If there was a reboot after the error had occurred and hence was unable to obtain the log, set NVM (700-530) to “0” to perform log collection and return the NVM (700-530) to “1” after completing the procedure.
3. Change any possible mechanical settings for corrective actions or detection conditions and repeat the operation.
4. Check the version of Controller ROM. If it is not the latest, download and update to the latest software revision. (Refer to GP 9 Firmware Version Upgrade)
5. Switch the power off then on.Get the procedures for reproducing an error according to the operation that was performed when the error occurred.
   a. Check the exact occurrence timing during job execution.
   b. Check the job settings from the Panel.
   c. Collect other information as much as possible to reproduce the error.
6. Obtain logs immediately after the error has occurred without turning the power off and on. Perform the 2.6 Log RAP.
7. The ESS Board rarely fails, contact Support for further instructions.

024-746, 024-747 Print Request Failure RAP

024-746 There are parameters that are incompatible with the specified paper type.

024-747 The specified combination of parameters (stored file size, paper size, paper tray, duplex command, output tray) cannot be executed or continued.

Procedure

Advise the customer to use the correct print parameters.

024-748 Bates Numbering Digit Exceeded RAP

024-748 The number of bates numbering digits is exceeded.

Procedure

Perform the steps that follow:

1. Advise the customer to reduce the number of documents to less than the user-specified number or reduce the number of numbering digits.
2. Obtain the log file using the log tool. Perform the 2.6 Log RAP
   - If there was a reboot after the error had occurred and hence was unable to obtain the log, set NVM (700-530) to “0” to perform log collection and return the NVM (700-530) to “1” after completing the procedure.
3. Change any possible mechanical settings for corrective actions or detection conditions and repeat the operation.
4. Check the version of Controller ROM. If it is not the latest, download and update to the latest software revision. (Refer to GP 9 Firmware Version Upgrade)
5. Switch the power off then on.Get the procedures for reproducing an error according to the operation that was performed when the error occurred.
   a. Check the exact occurrence timing during job execution.
   b. Check the job settings from the Panel.
   c. Collect other information as much as possible to reproduce the error.
6. Obtain logs immediately after the error has occurred without turning the power off and on. Perform the 2.6 Log RAP.
7. The ESS Board rarely fails, contact Support for further instructions.

024-910, 946, 959 Tray 1 Size Mismatch RAP

024-910 Size mismatch tray 1, measured length mismatch.

024-945 Tray 1 out of place.

024-959 Tray 1 size mismatch.

Procedure

1. Verify the paper side and type are correct for the Job in Tray 1.

024-911, 947, 960 Tray 2 Size Mismatch RAP

024-911 Size mismatch tray 2, measured length mismatch.

8 Tray 2 out of place.

024-960 Tray 2 size mismatch.

Procedure

Verify the paper side and type are correct for the Job in Tray 2.

024-923, 924, 925 TONER CARTRIDGE Empty RAP

024-923 Out of Yellow Toner. One of the conditions that follow was met:

- ADC Empty Detection TC patch density decrease is detected by ADC sensor. Toner is filled up but density is not regained.
- Counter Empty Detection Toner empty is judged by Dispense time/Pixel counter.

024-924 Out of Magenta Toner. One of the conditions that follow was met:

- EADC Empty Detection TC patch density decrease is detected by ADC sensor. Toner is filled up but density is not regained.
- Counter Empty Detection Toner empty is judged by Dispense time/Pixel counter.

024-925 Out of Cyan Toner. One of the conditions that follow was met:

- ADC Empty Detection TC patch density decrease is detected by ADC sensor. Toner is filled up but density is not regained.
- Counter Empty Detection Toner empty is judged by Dispense time/Pixel counter.

Possible Parts Affected

TONER CARTRIDGE Y (PL 5.1 Item 11)

TONER CARTRIDGE M (PL 5.1 Item 12)

TONER CARTRIDGE C (PL 5.1 Item 13)

TONER CARTRIDGE K (PL 5.1 Item 14)

DISP ASSY Y (PL 5.1 Item 2)

DISP ASSY M (PL 5.1 Item 3)

DISP ASSY C (PL 5.1 Item 4)

DISP ASSY K (PL 5.1 Item 5)

HARNESS ASSY TONER CRUM PL 5.1 Item 10 (Part of Kit Drive Assy Disp PL 5.1 Item 99)

MCU Board, PL 18.1 Item 1 (MFP), PL 18.5 Item 1 (SFP)

Procedure

WARNING

Ensure that the electricity to the machine is switched off while performing tasks that do not need electricity. Refer to GP 4. Disconnect the power cord. Electricity can cause death or injury. Moving parts can cause injury.

Perform the steps that follow:

1. Verify the area between the DISP ASSY and the CRUM inside the TONER CARTRIDGE (YMCK) is clean (without any foreign objects).
2. Verify the TONER CARTRIDGE (YMCK) is installed properly.
3. Verify the connection terminal of the CRUM inside the TONER CARTRIDGE (YMCK) is unbroken.
   - Install a new TONER CARTRIDGE (YMCK).
4. Verify the connection terminal of the DISP ASSY (YMCK) is unbroken.
   - Install a new DISP ASSY (YMCK).
5. Check the connection between the DISP ASSY (YMCK) and the MCU Board and verify P/J111, P/J112, P/J113, P/J114 and P/J110 are fully seated.
6. Check the continuity between the DISP ASSY and each cable of P/J111, P/J112, P/J113, P/J114<=>P/J110.
   a. Install a new MCU Board, REP 18.1.1(MFP), REP 18.5.1(SFP).
   b. Install a new Kit Drive Assy Disp REP 5.1.99

024-933, 940, 941 DRUM CARTRIDGE Y Life End RAP

024-933 DRUM CARTRIDGE Y Life End. Detected that the DRUM CARTRIDGE(Y) needs to be replaced.

024-940 DRUM CARTRIDGE M Life End. Detected that the DRUM CARTRIDGE(M) needs to be replaced.

024-941 DRUM CARTRIDGE C Life End. Detected that the DRUM CARTRIDGE(C) needs to be replaced.

Possible Parts Affected

XERO DEVE CRU ASSY-Y (PL 8.1 Item 1)

XERO DEVE CRU ASSY-M (PL 8.1 Item 2)

XERO DEVE CRU ASSY-C (PL 8.1 Item 3)

XERO DEVE CRU ASSY-K (PL 8.1 Item 4)

HARNESS ASSY DEVE/XERO C (PL 2.1 Item 9) (Part of Kit Xero CRUM LPH FFC PL 2.1 Item 99)

MCU Board, PL 18.1 Item 1 (MFP), PL 18.5 Item 1 (SFP)

Procedure

WARNING

Ensure that the electricity to the machine is switched off while performing tasks that do not need electricity. Refer to GP 4. Disconnect the power cord. Electricity can cause death or injury. Moving parts can cause injury.

Perform the steps that follow:

1. Verify the connection between the DEVE/XERO C and the CRUM inside the XERO DEVE is clean (without any foreign objects).
2. Verify the XERO DEVE CRU ASSY (YMCK) is installed properly.
3. Verify the connection terminal of the CRUM inside the XERO DEVE CRU ASSY (YMCK) is unbroken.
   - Install a new XERO DEVE CRU ASSY (YMCK) REP 8.1.1
4. Verify the connection terminal of the HARNESS ASSY DEVE/ XERO C is unbroken.
   - Install a new Kit Xero CRUM LPH FFC REP 2.1.99.
5. Check the connection between the HARNESS ASSY DEVE/XERO C and the MCU Board and verify P/J401, P/J402, P/J403, P/J404 and P/J400 are fully seated.
6. Check the continuity between the DISP ASSY and MCU Board at each cable of P/J401, P/J402, P/J403, P/J404<=>P/J400.
   a. Install a new MCU Board, REP 18.1.1(MFP), REP 18.5.1(SFP).

024-934 Paper Type Mismatch RAP

024-934 The fed paper is different from that specified in the controller when the media requested in the print file is not available in any media tray.

Procedure

WARNING

Ensure that the electricity to the machine is switched off while performing tasks that do not need electricity. Refer to GP 4. Disconnect the power cord. Electricity can cause death or injury. Moving parts can cause injury.

Perform the steps that follow:

1. Load the requested media, and set tray media type correctly.
2. Ensure that all connectors on the MCU Board, PL 18.1 Item 1 (MFP), PL 18.5 Item 1 (SFP), and the ESS Board, PL 18.1 Item 5 (MFP), PL 18.5 Item 5 (SFP), are secure connected. Make sure all surface mounted modules on both PWBs are securely connected.
3. Reload the software, GP 9.

024-950 Tray 1 Empty RAP

024-950 Tray 1 is Out of Paper

WARNING

Ensure that the electricity to the machine is switched off while performing tasks that do not need electricity. Refer to GP 4. Disconnect the power cord. Electricity can cause death or injury. Moving parts can cause injury.

Procedure

1. Add paper to Tray 1.
2. Enter dC330, code 071-101, No Paper Sensor PL 15.2 Item 22. Manually activate the No Paper Sensor, PL 15.2 Item 22.
   - The display changes.
3. Verify the connections at P/J545B, P/J546, and P/J547 between the No Paper Sensor PL 15.2 Item 22 and the MCU Board PL 18.1 Item 1 MFP) PL 18.5 Item 1 (SFP) are fully seated.
4. Check the continuity of the cable between the No Paper Sensor and the MCU Board P/J545B, P/J546, and P/J547<=>P/J540.
   a. Install a new No Paper Sensor PL 15.2 Item 22.
5. Upgrade the Firmware GP 9.
6. Install a new MCU Board REP 18.1.1 (MFP) REP 18.5.1 (SFP)

024-951 Tray 2 Empty RAP

024-951 Tray 2 is empty.

WARNING

Ensure that the electricity to the machine is switched off while performing tasks that do not need electricity. Refer to GP 4. Disconnect the power cord. Electricity can cause death or injury. Moving parts can cause injury.

Procedure

1. Add paper to the Option Feeder.
2. Enter dC330, code 071-112, Option Feeder No Paper Sensor. Manually activate the Option Feeder No Paper Sensor PL 10.2 Item 9.
   - The display changes.
3. Verify the connections between P/J805 and P/J807 from the Option Feeder No Paper Sensor PL 10.2 Item 9 to the Board Assy OPF 550 PL 10.1 Item 11 are fully seated.
4. Check the continuity of the cable between the Option Feeder No Paper Sensor and the Board Assy OPF 550 P/J805<=>P/J807.
   a. Install a new Option Feeder No Paper Sensor PL 10.2 Item 9.
5. Upgrade the Firmware GP 9.
6. Install a new Board Assy OPF 550 PL 10.1 Item 11.

024-954, 958 Bypass Tray Out Of Paper RAP

024-954 The Bypass tray is empty.

024-958 Check Paper Selection - Check Bypass Tray Settings.

WARNING

Ensure that the electricity to the machine is switched off while performing tasks that do not need electricity. Refer to GP 4. Disconnect the power cord. Electricity can cause death or injury. Moving parts can cause injury.

Procedure

1. Add paper to the Bypass Tray
2. Enter dC330, code 071-100, Bypass Tray No Paper Sensor. Manually activate the Bypass Tray No Paper Sensor, PL 13.1 Item 8.
   - **The Display Changes**
3. Verify the connections between P/J483, P/484, and P/J480 from the Option Feeder No Paper Sensor PL 10.2 Item 9 to the Board Assy OPF 550 PL 10.1 Item 11 are fully seated.
4. Check the continuity of the cable between the Bypass Tray No Paper Sensor and the Board Assy OPF 550 P/J483 and P/J484<=>P/J480.
   a. Install a new Bypass Tray No Paper Sensor PL 10.2 Item 9.
5. Upgrade the Firmware GP 9.
6. Install a new MCU Board REP 18.1.1 (MFP) REP 18.5.1 (SFP).

024-965, 024-966 ATS/APS RAP

024-965 The paper specified for printing is not loaded in the tray.

024-966 The paper specified for printing cannot be detected.

Initial Actions

- Verify the correct setting for paper size and type are selected in the UI.
- Add the correct paper to the appropriate Tray.

WARNING

Ensure that the electricity to the machine is switched off while performing tasks that do not need electricity. Refer to GP 4. Disconnect the power cord. Electricity can cause death or injury. Moving parts can cause injury.

Procedure

Perform the steps that follow:

1. Switch off then switch on the machine, perform 2.6 Log.
2. If the fault persists, perform the steps that follow:
   a. Ensure that all connectors on the MCU Board, PL 18.1 Item 1 (MFP), PL 18.5 Item 1 (SFP), and the ESS Board, PL 18.1 Item 5 (MFP), PL 18.5 Item 5 (SFP) are securely connected. Make sure all surface mounted modules on both PWBs are securely connected.
   b. Reload the software, GP 9.

026-400 USB Host Connection Number Exceeded RAP

026-400 The number of machines that are connected to the USB Host Port of this machine has exceeded the maximum permissible number of connections.

Procedure

Perform the steps that follow:

1. Switch off then switch on the machine, perform 2.6 Log.
2. Have the customer disconnect some of the machines that are connected to this USB host port and ensure that the number of connected machines are below the maximum permissible number of connections.

026-402 Changed IOT Speed RAP

026-402 The IOT has started the print at a low speed.

Procedure

For information only, no service action necessary.

026-403 Stop printing and wait for toner cooling RAP

026-403 When IOT sends notification that cooling related to the toner is required when the IOT internal temperature is high.

Procedure

Inform the customer to give the machine time to cool down before proceeding.

026-700 LDAP Protocol Error RAP

026-700 It was detected that the error response returned from the server does not exist in the LDAP protocol definitions.

Procedure

Perform the steps that follow:

1. Advise the customer that this fault is caused when the server uses an undefined LDAP protocol that is not supported by the machine. Correct any mistakes in server settings or client operation.
2. Obtain logs immediately after the error has occurred without turning the power off and on. Perform the 2.6 Log RAP
3. The ESS Board rarely fails, do not replace the ESS Board, contact Support for further instructions.

026-701 Address Book Request Overflow RAP

026-701 The software in the machine was subjected to a large amount of simultaneous address queries from multiple machine panel and Web UI input devices. The processing capacity of the JRM directory service has been exceeded.

Procedure

Perform the steps that follow:

1. Advise the customer that when performing simultaneous queries on the address book in the machine from multiple machine panel and Web UI input devices, lower the query interval.
2. Obtain logs immediately after the error has occurred without turning the power off and on. Perform the 2.6 Log RAP.
3. The ESS Board rarely fails, do not replace the ESS Board, contact Support for further instructions.

026-702 Address Book Directory Service Overflow RAP

026-702 The JRM directory service, which is an internal software of the machine, has simultaneously received two or more requests for the same operation.

Procedure

Perform the steps that follow:

1. Check whether the Controller ROM is the latest version. If not, upgrade it to the latest.
2. Obtain logs immediately after the error has occurred without turning the power off and on. Perform the 2.6 Log RAP.
3. The ESS Board rarely fails, do not replace the ESS Board, contact Support for further instructions.

026-703 Abort With Logout RAP

026-703 At installation of additional document, authentication is already cancelled.

Procedure

Have the customer make it impossible for authentication to be cancelled at additional document loading.

026-708 URL Data Over Size RAP

026-708 The size of a scan to URL job has exceeded the upper limit of the size of scanned data per job.

Procedure

Have the customer:

1. Reduce a resolution send parameter (image-to-send quality) then re-send the job.
2. Reduce a magnification send parameter, then re-send the job.
3. Increase the maximum file accumulated data size.
4. Obtain logs immediately after the error has occurred without turning the power off and on. Perform the 2.6 Log RAP.
5. The ESS Board rarely fails, do not replace the ESS Board, contact Support for further instructions.

026-710 S/MIME Unsupported Cipher RAP

026-710 The device has received a S/MIME encrypted mail that is encrypted by an unsupported encryption method.

Procedure

Perform the steps that follow:

1. Have the customer:
   a. Ask the sender of the S/MIME encrypted mail to encrypt the mail by the encryption method (3DES), then re-send it.
   b. Set FIPS140 Authentication Mode of the device to off.
2. Obtain logs immediately after the error has occurred without turning the power off and on. Perform the 2.6 Log RAP.
3. The ESS Board rarely fails, do not replace the ESS Board, contact Support for further instructions.

026-711 Multi-Page File Size RAP

026-711 The upper limit size of the multi-page file format generated in scan service has been exceeded.

Procedure

Have the customer:

1. Reduce the resolution level (scanned-image quality), then re-run the job.
2. Reduce the number of documents, then re-run the job.
3. Obtain logs immediately after the error has occurred without turning the power off and on. Perform the 2.6 Log RAP.
4. The ESS Board rarely fails, do not replace the ESS Board, contact Support for further instructions.

026-712 HTTP Out Job Overlap Error RAP

026-712 The high compression/OCR processing module has detected that a job that specifies high compression/OCR processing and is to be taken out using HTTP has started while another job to be sent via the network is undergoing high compression/OCR processing.

Procedure

For information only, no service action necessary. Advise the customer that as a job specifying high compression/OCR processing is in progress, wait until the job is complete before running another job.

026-718 PS Print Instruction Fail RAP

026-718 An erroneous combination of print parameters selected (finishing, paper size, paper tray, Duplex instructions, output tray) prevents the device from running the job.

Procedure

Perform the steps that follow:

1. Have the customer correctly set finishing, paper size, paper tray, duplex instructions, and output tray options, then re-run the job.
2. If the fault persists, reload the software, GP 9.

026-719 Internal Error in Scan RAP

026-719 An internal error has occurred.

Procedure

Perform the steps that follow:

1. Update to the latest version of the software, GP 9.
2. Have the customer retry the same operation.
3. Obtain logs immediately after the error has occurred without turning the power off and on. Perform the 2.6 Log RAP.
4. The ESS Board rarely fails, do not replace the ESS Board, contact Support for further instructions.

026-720 to 026-723 Media Error RAP

026-720 The media does not have enough space available.

026-721 An attempt to access media has failed.

026-722 The media is not formatted.

026-723 An attempt to access media has failed.

Procedure

Have the customer:

1. Check that the media exists where scanned documents will be sent.
2. Check that the PC can access the media where scanned documents will be sent.
3. Check that a file can be created in a specified storage.
4. Check that the media is neither removed nor reinserted while being referred to or that during that time, other media is not inserted.
5. Obtain logs immediately after the error has occurred without turning the power off and on. Perform the 2.6 Log RAP.
6. The ESS Board rarely fails, do not replace the ESS Board, contact Support for further instructions.

026-726 Inconsistent Options RAP

026-726 The device configuration info included in XPJL does not match the actual configuration.

Procedure

1. Have the customer set up the device configuration info on the printer driver screen so that it can match the actual configuration,

026-727 Media Filepath Fail RAP

026-727 The storage path with the specified character string length (including the filename) cannot be created in the media.

Procedure

1. Have the customer shorten the specified storage location or the filename.
2. Obtain logs immediately after the error has occurred without turning the power off and on. Perform the 2.6 Log RAP.
3. The ESS Board rarely fails, do not replace the ESS Board, contact Support for further instructions.

026-728, 026-729 WSD Scan Error RAP

026-728 An error occurred during communication with the WSD scan client. WSD scan client cancelled the job.

026-729 An error occurred during communication with the WSD scan client. WSD scan client cancelled the job or a scan from the DADF was performed from an application other than Windows FAX and scan.

Procedure

Have the customer:

1. Check whether the transfer destination WSD scan client and the machine are able to communicate via the network. For example:
   - Check whether the WSD scan client has enough free capacity.
   - Check the connection of the network cable.
2. When using DADF, perform the scan using Windows FAX & Scan. Or, change to the platen to perform the scan.
3. **026-972 Only** - Obtain logs immediately after the error has occurred without turning the power off and on. Perform the 2.6 Log RAP.
4. **026-972 Only** - The ESS Board rarely fails, do not replace the ESS Board, contact Support for further instructions.

026-730 Tray Paper Size Not Detected RAP

026-730 The paper size of the paper tray selected is unknown.

Procedure

Make sure the paper guides in the selected tray are set correctly.

026-731 to 026-733 PJL Fail RAP

026-731 The PIN number that is specified by PJL command is different from the number that is calculated from the machine's serial number.

026-732 The print count that is specified by PJL command has exceeded the machine's total impression meter value by +100.

026-733 The password that is specified by PJL command is different from the one that is set in the machine.

Procedure

Have the customer correct the PIN number, print count or password that is specified by PJL Command, then try again.

026-734 PJL Diag Mode RAP

026-734 Unable to transition to the PJL Diag Mode.

Procedure

Have the customer:

1. Ensure that the job has completed, then try again.
2. After completing a panel operation, wait at least 1 minute before starting the download operation.

026-739 Waiting Scan Job Deleted RAP

026-739 When there are paused scan jobs during the successful completion of a login/logout.

Procedure

Perform the steps that follow:

1. For one occurrence, take no action. If the fault persists, do the following,
2. Obtain the log file using the log tool. Perform the 2.6 Log RAP
   - If there was a reboot after the error had occurred and hence was unable to obtain the log, set NVM (700-530) to “0” to perform log collection and return the NVM (700-530) to “1” after completing the procedure.
3. Change any possible mechanical settings for corrective actions or detection conditions and repeat the operation.
4. Check the version of Controller ROM. If it is not the latest, download and update to the latest software revision. (Refer to GP 9 Firmware Version Upgrade)
5. Switch the power off then on.Get the procedures for reproducing an error according to the operation that was performed when the error occurred.
   a. Check the exact occurrence timing during job execution.
   b. Check the job settings from the Panel.
   c. Collect other information as much as possible to reproduce the error.
6. Obtain logs immediately after the error has occurred without turning the power off and on. Perform the 2.6 Log RAP.
7. The ESS Board rarely fails, contact Support for further instructions.

027-442, 443, 444 Duplicate IP Address 1 RAP

027-442 IPv6 - stateless auto setting IP address 1 is duplicated.

027-443 IPv6 - stateless auto setting IP address 2 is duplicated.

027-444 IPv6 - stateless auto setting IP address 3 is duplicated.

Procedure

Perform the steps that follow:

1. Have the customer either change the IPv6 Stateless Auto Setting Address 1, 2 or 3 of this device or the IPv6 address of the other device on the network.
2. If the fault persists, have the cu

027-445 Illegal IP Address RAP

027-445 IPv6 - manually set IP address is invalid.

Procedure

Perform the steps that follow:

1. Have the customer change the IPv6 (Manual Setting Address) of this machine to the IPv6 address that can be used as the self-machine address.
2. If the fault persists, ask the customer to contact their Network Administrator.

027-446 Duplicate IP Address 2 RAP

027-446 IPv6 - automatically set IP address is duplicated.

Procedure

Perform the steps that follow:

1. Have the customer change the IPv6 (Manual Setting Address) of this machine to the IPv6 address that can be used as the self-machine address.
2. If the fault persists, ask the customer To Contact Their Network Administrator.

027-447 Duplicate IP Address 3 RAP

027-447 IPv6 - link local IP address is duplicated.

Procedure

Perform the steps that follow:

1. Have the customer change the IPv6 Link Local Address of this device or the IPv6 address of the other device on the network.
2. If the fault persists, ask the customer To Contact Their Network Administrator.

027-452 Duplicate IP Address 4 RAP

027-452 A PC with the same IP address exists on the network.

Procedure

Perform the steps that follow:

1. Have the customer change the duplicated IP address of the PC.
2. If the fault persists, ask the customer To Contact Their Network Administrator.

027-500 SMTP Server Fail for Mail IO RAP

027-500 SMTP server address resolution fail for mail IO.

Procedure

Have the customer:

1. Check with the System Administrator that the mail server has been launched and the environment is already used for other purposes (such as for PC).
2. Check that a correct SMTP server address is reflected in the device setting list:
   a. When the SMTP server address is specified using IP address, set a correct IP address.
   b. When the SMTP server address is specified using FQDN, check that the FQDN name is correct. Also check that a correct DNS server address is set for the device, and set a correct IP address.
3. If the fault persists, ask the customer To Contact Their Network Administrator.

027-501 POP Server Fail for Mail IO RAP

027-501 Incorrect POP server name was detected.

Procedure

Have the customer:

1. Check with the System Administrator that the mail server has been launched and the environment is already used for other purposes (such as for PC).
2. Check that a correct POP server address is reflected in the device setting list:
   a. When the POP server address is specified using IP address, set a correct IP address.
   b. When the POP server address is specified using FQDN, check that FQDN name is correct. Also check that a correct DNS server address is set for the device, and set a correct IP address.
3. If the fault persists, ask the customer To Contact Their Network Administrator.

027-502 POP Authentication Fail for Mail IO RAP

027-502 POP authentication fail for mail IO.

Procedure

Perform the steps that follow:

1. Have the customer specify the correct POP server authentication information.
2. Perform the 027-501 POP Server Fail for Mail IO RAP, then have the customer specify a correct POP User Name.
3. If the fault persists, ask the customer To Contact Their Network Administrator.

027-503, 504, 533, 773, 785, 786 Server Communication Timeout RAP

027-503 Time to communicate with the POP server ran out (after connection to the server).

027-504 Internal error or unexpected server response received (at any time).

027-533 An internal error has occurred during SMB scan

027-773 Time to communicate with the SMTP server ran out (after connection to the server).

027-785 Response timeout occurs from the destination WebDAV server.

027-786 WebDAV server timeout is answered.

Procedure

Perform the steps that follow:

1. Have the customer wait for a while, then perform the operation again.
2. Investigate the SMTP Server information (name and version of the server that is in use) or the provider name (in case of outsourcing).(*1)
3. Refer to the SMTP Communication Protocol Report and check whether any 4xx or 5xx error response were notified from the server. If any 4xx or 5xx response was notified, this mean that the problem could be at the server side. Use the information obtained from 1.2 to search the Web for troubleshooting information (*2) and perform the corrective actions.(*1) It is also possible
   a. *1 It is also possible to trace the provider and which server is being used by using the Host Name that is listed in the 220 response (the very first packet) from the Mail Server.
   b. *2 (Reference sample for troubleshooting information search result) Obtained information: Exchange 2007 Server, 550 5.7.1 Client does not have permissions to send as this sender (error information from the server). Search keywords: 550 5.7.1 Client does not have permissions to send as this sender.
   c. Microsoft Search engine: Google Search result: Exchange 2007 transport access permission model Reason: The Sender that is specified in the MAIL FROM field of the SMTP protocol does not have the access permission to send to this server.
   d. The ms-Exch-SMTP-Submit access permission must be granted to the Sender.
4. Ask the customer To Contact Their Network Administrator.

027-513 SMB Scan Client Access RAP

027-513 In scan to SMB, the user has no right to access the SMB server.

Procedure

1. Have the customer check if the specified user has read/write access in a file or folder in the specified place.
2. Have the customer retry the same operation.
3. Obtain logs immediately after the error has occurred without turning the power off and on. Perform the 2.6 Log RAP.
4. The ESS Board rarely fails, do not replace the ESS Board, contact Support for further instructions.

027-514 Host Name Solution Error in SMB RAP

027-514 Unable to resolve hostname during SMB scan.

Procedure

1. Have the customer check the connection to the DNS. Or, check whether the SMB server name of the transfer destination has been registered in the DNS.
2. Have the customer retry the same operation.
3. Obtain logs immediately after the error has occurred without turning the power off and on. Perform the 2.6 Log RAP.
4. The ESS Board rarely fails, do not replace the ESS Board, contact Support for further instructions.

027-515 DNS Server Setup in SMB RAP

027-515 The DNS server was not set during SMB scan.

Procedure

1. Have the customer set the DNS server address. Or, set the SMB server address of the transfer destination using IP address.
2. Have the customer retry the same operation.
3. Obtain logs immediately after the error has occurred without turning the power off and on. Perform the 2.6 Log RAP.
4. The ESS Board rarely fails, do not replace the ESS Board, contact Support for further instructions.

027-516 Server Connection Error in SMB RAP

027-516 Problem with connection to server during SMB scan.

Procedure

Have the customer:

1. Check that network communication between the transfer destination SMB server and this machine is available, by checking:
   a. The connection of network cables.
   b. The TCP/IP settings.
   c. For communication through port 137 (UDP), port 138 (UDP) and port 139 (TCP).
2. Check the network settings that follow to see if the computer operates as an SMB server.
   a. Check that the file sharing service for Microsoft network is enabled.
   b. Check that NetBIOS over TCP/IP is enabled in the TCP/IP settings.
   c. Check the file sharing service (communications through port 137 (UDP), port 138 (UDP) and port 139 (TCP)) is allowed in the firewall settings.
3. For communication that goes beyond the subnet, check the WINS server settings and check whether the server name address can be resolved correctly.
4. Check whether the NetBIOS interface device at the transfer destination SMB server has started.
5. Have the customer retry the same operation.
6. Obtain logs immediately after the error has occurred without turning the power off and on. Perform the 2.6 Log RAP.
7. The ESS Board rarely fails, do not replace the ESS Board, contact Support for further instructions.

027-518 Login Name or Password Error in SMB RAP

027-518 Login name or a password error in SMB.

Procedure

1. Have the customer check the password that was set for the shared folder.
2. Have the customer retry the same operation.
3. Obtain logs immediately after the error has occurred without turning the power off and on. Perform the 2.6 Log RAP.
4. The ESS Board rarely fails, do not replace the ESS Board, contact Support for further instructions.

027-519 Scanning Picture Preservation Place Error RAP

027-519 Scan image storage destination or file name specification error during scanner (save to PC) SMB transfer.

Procedure

Have the customer:

1. Check if the storage destination is correct.
2. Check if a prohibited character was detected in the specified storage destination or file name.
3. Check if the specified storage destination is linked to a different shared folder due to the distributed file system (DFS).
4. Have the customer retry the same operation.
5. Obtain logs immediately after the error has occurred without turning the power off and on. Perform the 2.6 Log RAP.
6. The ESS Board rarely fails, do not replace the ESS Board, contact Support for further instructions.

027-520 File Name Acquisition Failure RAP

027-520 Unable to obtain the file/folder name on the SMB scan server.

Procedure

1. Have the customer retry the same operation.
2. Obtain logs immediately after the error has occurred without turning the power off and on. Perform the 2.6 Log RAP.
3. The ESS Board rarely fails, do not replace the ESS Board, contact Support for further instructions.

027-521 File Name Suffix Limit Over in SMB RAP

027-521 The SMB scan file name/folder name suffix has exceeded the limit value.

Procedure

1. Have the customer change the file name/destination folder on the SMB scan server. Else, move or delete the files in the destination folder.
2. Have the customer retry the same operation.
3. Obtain logs immediately after the error has occurred without turning the power off and on. Perform the 2.6 Log RAP.
4. The ESS Board rarely fails, do not replace the ESS Board, contact Support for further instructions.

027-522 File Creation Failure in SMB RAP

027-522 Failed to create an SMB scan file.

Procedure

Have the customer:

1. Check if the specified file name already exists on the server.
2. Check if the specified file name is in use.
3. Check if the specified file name already exists as a directory.
4. Check if a prohibited character was detected in the specified file name.
5. Have the customer retry the same operation.
6. Obtain logs immediately after the error has occurred without turning the power off and on. Perform the 2.6 Log RAP.
7. The ESS Board rarely fails, do not replace the ESS Board, contact Support for further instructions.

027-523 Lock Folder Creation Failure in SMB RAP

027-523 Failed to create an SMB scan lock folder.

Procedure

Have the customer:

1. Manually delete the lock directory (*.LCK) from the transfer destination.
2. Check whether a folder with the same name as the specified name already exists.
3. Have the customer retry the same operation.
4. Obtain logs immediately after the error has occurred without turning the power off and on. Perform the 2.6 Log RAP.
5. The ESS Board rarely fails, do not replace the ESS Board, contact Support for further instructions.

027-524 Folder Creation Failure in SMB RAP

027-524 Failed to create an SMB scan folder.

Procedure

1. Have the customer check if a file or folder with the same name as the specified name exists on the SMB server.
2. Have the customer retry the same operation.
3. Obtain logs immediately after the error has occurred without turning the power off and on. Perform the 2.6 Log RAP.
4. The ESS Board rarely fails, do not replace the ESS Board, contact Support for further instructions.

027-525, 027-527 File Delete Failure in SMB RAP

027-525 Failed to delete an SMB scan file.

027-527 Failed to delete an SMB scan folder.

Procedure

1. Have the customer check whether the file in the specified storage destination is being used by another user.
2. Have the customer retry the same operation.
3. Obtain logs immediately after the error has occurred without turning the power off and on. Perform the 2.6 Log RAP.
4. The ESS Board rarely fails, do not replace the ESS Board, contact Support for further instructions.

027-526 Lock Folder Delete Failure in SMB RAP

027-526 Failed to delete an SMB scan lock folder.

Procedure

1. Have the customer manually delete the lock directory (*.LCK) from the transfer destination, then retry the job.
2. Obtain logs immediately after the error has occurred without turning the power off and on. Perform the 2.6 Log RAP.
3. The ESS Board rarely fails, do not replace the ESS Board, contact Support for further instructions.

027-528 Data Write Failure to SMB Server RAP

027-528 The storage destination on the SMB scan data server has no free space.

Procedure

1. Have the customer check that the storage destination has enough free space.
2. Have the customer retry the same operation.
3. Obtain logs immediately after the error has occurred without turning the power off and on. Perform the 2.6 Log RAP.
4. The ESS Board rarely fails, do not replace the ESS Board, contact Support for further instructions.

027-529 Data Read Failure From SMB Server RAP

027-529 Unexpected error of the SMB scan data server.

Procedure

1. Have the customer log in to the SMB server from another PC using the same user name and check whether they can write a file into the same storage destination on that SMB server.
2. Have the customer retry the same operation.
3. Obtain logs immediately after the error has occurred without turning the power off and on. Perform the 2.6 Log RAP.
4. The ESS Board rarely fails, do not replace the ESS Board, contact Support for further instructions.

027-530 File Name Duplicate Failure in SMB RAP

027-530 Cancel Job is selected for SMB scan File Name Conflict.

Procedure

1. Have the customer set File Name Conflict to other than Cancel Job.
2. Have the customer retry the same operation.
3. Obtain logs immediately after the error has occurred without turning the power off and on. Perform the 2.6 Log RAP.
4. The ESS Board rarely fails, do not replace the ESS Board, contact Support for further instructions.

027-531 SMB Scan Filing Policy Injustice RAP

027-531 Incorrect SMB scan filing policy (when additional items are selected).

Procedure

1. Have the customer check that the file format is not set to Multi-page When Add is selected for File Name Conflict.
2. Have the customer retry the same operation.
3. Obtain logs immediately after the error has occurred without turning the power off and on. Perform the 2.6 Log RAP.
4. The ESS Board rarely fails, do not replace the ESS Board, contact Support for further instructions.

027-532 NEXTNAME File Access Error in SMB RAP

027-532 A file access error has occurred during scanner (save to PC) SMB transfer.

Procedure

1. Have the customer check that the NEXTNAME.DAT file is correct when Add is selected for File Name Conflict.
2. Have the customer retry the same operation.
3. Obtain logs immediately after the error has occurred without turning the power off and on. Perform the 2.6 Log RAP.
4. The ESS Board rarely fails, do not replace the ESS Board, contact Support for further instructions.

027-543 SMB Server Name Specification Error RAP

027-543 The SMB server (NetBIOS) name specification is incorrect.

Procedure

1. Have the customer check that the server name of the SMB server is correct.
2. Have the customer retry the same operation.
3. Obtain logs immediately after the error has occurred without turning the power off and on. Perform the 2.6 Log RAP.
4. The ESS Board rarely fails, do not replace the ESS Board, contact Support for further instructions.

027-547, 027-548 SMB Protocol Errors 1 RAP

027-547 SMB protocol error (4-007), the scan domain name specification is incorrect.

027-548 SMB protocol error (4-008), the scan user name specification is incorrect

Procedure

1. Advise the customer to have the system administrator set the domain name and user name correctly.
2. Have the customer retry the same operation.
3. Obtain logs immediately after the error has occurred without turning the power off and on. Perform the 2.6 Log RAP.
4. The ESS Board rarely fails, do not replace the ESS Board, contact Support for further instructions.

027-549, 027-572 to 027-576 SMB Protocol Error 4-009 RAP

027-549 SMB protocol error (4-009), the specification of password is incorrect.

027-572 SMB protocol error (4-032), incorrect parameter.

027-573 SMB protocol error (4-033), incorrect character code.

027-574 SMB protocol error (4-034), incorrect data size.

027-576 SMB protocol error (4-036), incorrect domain data size.

Procedure

1. Have the customer perform the operation again.
2. Obtain logs immediately after the error has occurred without turning the power off and on. Perform the 2.6 Log RAP.
3. The ESS Board rarely fails, do not replace the ESS Board, contact Support for further instructions.

027-564 SMB Protocol Error 4-024 RAP

027-564 SMB protocol error (4-024), the host is missing.

Procedure

Have the customer:

1. Check that the authentication server and the device can communicate through the network (check the network group, TCP/IP settings, check the communication at Port No. 137 (UDP)/Port No. 138 (UDP)/Port No. 139 (TCP)).
2. If the authentication server and the device are connected to different subnets, check that the device has settings that can resolve the address of the authentication server.
3. Check if the NetBIOS over TCP/IP has become enabled at the authentication server settings:
   a. Check if the authentication server and the device can resolve the addresses from the WINS server.
   b. Check if the authentication server and the device can resolve the addresses from the DNS server.
4. Check if the NetBIOS over TCP/IP has become enabled at the authentication server settings.
5. Check at the Internet connection firewall if the communication through Ports 137, 138 and 139 are not blocked.
6. Have the customer retry the same operation.
7. Obtain logs immediately after the error has occurred without turning the power off and on. Perform the 2.6 Log RAP.
8. The ESS Board rarely fails, do not replace the ESS Board, contact Support for further instructions.

027-565, 027-578 SMB Protocol Errors 2 RAP

027-565 SMB protocol error (4-025), cannot connect.

027-578 SMB protocol error (4-038), communication timeout has occurred.

Procedure

1. Have the customer check that the authentication server and the device can communicate through the network (check the network group, TCP/IP settings, check the communication at Port No. 137 (UDP)/Port No. 138 (UDP)/Port No. 139 (TCP)).
2. Have the customer retry the same operation.
3. Obtain logs immediately after the error has occurred without turning the power off and on. Perform the 2.6 Log RAP.
4. The ESS Board rarely fails, do not replace the ESS Board, contact Support for further instructions.

027-566 SMB Protocol Error 4-026 RAP

027-566 SMB protocol error (4-026), the library has not been initialized.

Procedure

1. Have the customer check if the SMB client has been started.
2. Have the customer retry the same operation.
3. Obtain logs immediately after the error has occurred without turning the power off and on. Perform the 2.6 Log RAP.
4. The ESS Board rarely fails, do not replace the ESS Board, contact Support for further instructions.

027-569 SMB (TCP/IP) Not Started RAP

027-569 SMB (TCP/IP) is not started

Procedure

1. Have the customer check that SMB (TCP/IP) is enabled.
2. Have the customer retry the same operation.
3. Obtain logs immediately after the error has occurred without turning the power off and on. Perform the 2.6 Log RAP.
4. The ESS Board rarely fails, do not replace the ESS Board, contact Support for further instructions.

027-584 SMB Protocol Error 4-044 RAP

027-584 SMB protocol error (4-044), authentication server common security mode is operating.

Procedure

1. Have the customer set the authentication server to Windows other than Win95/Win98/Me.
2. Have the customer retry the same operation.
3. Obtain logs immediately after the error has occurred without turning the power off and on. Perform the 2.6 Log RAP.
4. The ESS Board rarely fails, do not replace the ESS Board, contact Support for further instructions.

027-585 SMB Protocol Error 4-045 RAP

027-585 SMB protocol error (4-045), scan login not available time period.

Procedure

1. Advise the customer to check with the system administrator for the time period when logging in is allowed.
2. Have the customer retry the same operation.
3. Obtain logs immediately after the error has occurred without turning the power off and on. Perform the 2.6 Log RAP.
4. The ESS Board rarely fails, do not replace the ESS Board, contact Support for further instructions.

027-586 SMB Protocol Error 4-046 RAP

027-586 SMB protocol error (4-046), the password has expired.

Procedure

1. Advise the customer to obtain a valid password from the system administrator.
2. Have the customer retry the same operation.
3. Obtain logs immediately after the error has occurred without turning the power off and on. Perform the 2.6 Log RAP.
4. The ESS Board rarely fails, do not replace the ESS Board, contact Support for further instructions.

027-587 SMB Protocol Error 4-047 RAP

027-587 SMB protocol error (4-047), the password must be changed.

Procedure

1. Advise the customer to request the system administrator to disable the change password at next login setting.
2. Have the customer retry the same operation.
3. Obtain logs immediately after the error has occurred without turning the power off and on. Perform the 2.6 Log RAP.
4. The ESS Board rarely fails, do not replace the ESS Board, contact Support for further instructions.

027-588, 027-589 SMB Protocol Errors 3 RAP

027-588 SMB protocol error (4-048), the user account is disabled.

027-589 SMB protocol error (4-049), locked out.

Procedure

1. Advise the customer to request the system administrator to enable or unlock the user account. as necessary.
2. Have the customer retry the same operation.
3. Obtain logs immediately after the error has occurred without turning the power off and on. Perform the 2.6 Log RAP.
4. The ESS Board rarely fails, do not replace the ESS Board, contact Support for further instructions.

027-590 SMB Protocol Error 4-050 RAP

027-590 SMB protocol error (4-050), the user account has expired.

Procedure

1. Advise the customer to obtain a valid user account from the system administrator or request the system administrator extend the validity period of the account.
2. Have the customer retry the same operation.
3. Obtain logs immediately after the error has occurred without turning the power off and on. Perform the 2.6 Log RAP.
4. The ESS Board rarely fails, do not replace the ESS Board, contact Support for further instructions.

027-591 SMB Protocol Error 4-051 RAP

027-591 SMB protocol error (4-051), the user account is restricted. Blank password is not allowed.

Procedure

1. Advise the customer to request the system administrator set a user password.
2. Have the customer retry the same operation.
3. Obtain logs immediately after the error has occurred without turning the power off and on. Perform the 2.6 Log RAP.
4. The ESS Board rarely fails, do not replace the ESS Board, contact Support for further instructions.

027-700 Mail Address Domain Error RAP

027-700 The domain of the destination mail address is designated as a prohibited domain.

Procedure

1. Have the customer check that the domain of the destination mail address is not designated as a prohibited domain.
2. Have the customer retry the same operation.
3. Obtain logs immediately after the error has occurred without turning the power off and on. Perform the 2.6 Log RAP.
4. The ESS Board rarely fails, do not replace the ESS Board, contact Support for further instructions.

027-701 Disconnected Network Cable RAP

027-701 In external authentication, the disconnected cable is detected.

Procedure

1. Make sure the network cable is connected correctly.
2. Have the customer retry the same operation.
3. Obtain logs immediately after the error has occurred without turning the power off and on. Perform the 2.6 Log RAP.
4. The ESS Board rarely fails, do not replace the ESS Board, contact Support for further instructions.

027-702 to 027-709 Certificate for Addresses Error RAP

027-702 No certificate for the destination exists (before connection to the server).

027-703 The certificate for the destination expired (before connection to the server).

027-704 The certificate for the destination is not reliable (before connection to the server).

027-705 The certificate for the destination existed on a list of revoked certificates (before connection to the server).

027-706 No device certificate exists (before connection to the server).

027-707 The device certificate expired (before connection to the server).

027-708 The device certificate is not reliable (before connection to the server).

027-709 The certificate for the destination existed on a list of revoked certificates (before connection to the server).

Procedure

Perform the steps that follow:

1. Have the customer:
   a. Store the correct certificate for the destination in the machine. Check the items that follow:
      i. That the term for which the certificate is valid.
      ii. The machines time is correct.
   b. Check the certification path for the destination certificate and import the necessary CA certificate.
   c. Store in this machine a destination certificate that is not on the list of revoked certificates.
   d. Check that the mail address written on the device certificate is the same as that set up on the device.
2. Have the customer retry the same operation.
3. Obtain logs immediately after the error has occurred without turning the power off and on. Perform the 2.6 Log RAP.
4. The ESS Board rarely fails, do not replace the ESS Board, contact Support for further instructions.

027-710 to 027-716 S/MIME Mail Error RAP

027-710 The mail I/O received S/MIME mail even though S/MIME was disabled.

027-711 SMIME mail certificate retrieval error.

027-712 Invalid S/MIME mail certificate error.

027-713 Receive S/MIME mail tampered error.

027-714 S/MIME mail sender impersonation error.

027-715 S/MIME mail certificate not supported.

027-716 Prohibited unsigned mail was detected. All the S/MIME unsigned mails (including standard mails and S/MIME encrypted mails) are discarded.

Procedure

Perform the steps that follow:

1. Have the customer:
   a. Enable S/MIME setting in the machine.
   b. Register the sender certificate in the machine or change the mailer options so that the S/MIME signature mails from the sender will be sent with the certificate.
   c. Check that the signature bearer of the CA certificate is registered in the device.
   d. Check that the mail address written on the device certificate is the same as that set up on the device.
2. Advise the customer that the sender needs to send a mail that is signed with a valid certificate because the sender certificate has expired.
3. Advise the customer that the device may be blocking the attacks.
4. Update the software to the latest version, GP 9.
5. Have the customer retry the same operation.
6. Obtain logs immediately after the error has occurred without turning the power off and on. Perform the 2.6 Log RAP.
7. The ESS Board rarely fails, do not replace the ESS Board, contact Support for further instructions.

027-717 No MX Record at DNS RAP

027-717 An enquiry was sent to the DNS server for the MX record, but it cannot be obtained.

Procedure

Have the customer:

1. Check with the DNS server administrator on the existence of DNS/MX record.
2. Check that the DNS server settings of the device is set properly.
3. Have the customer retry the same operation.
4. Obtain logs immediately after the error has occurred without turning the power off and on. Perform the 2.6 Log RAP.
5. The ESS Board rarely fails, do not replace the ESS Board, contact Support for further instructions.

027-720, 027-721 Extension Server Error RAP

027-720 Server for application interface cannot be found during web service interface.

027-721 Application interface destination during web service interface - not found.

Procedure

Perform the steps that follow:

1. Have the customer check that the DNS server address is set properly. Check that the PC running the application interface is registered in DNS.
2. Reload the software, GP 9.
3. Have the customer retry the same operation.
4. Obtain logs immediately after the error has occurred without turning the power off and on. Perform the 2.6 Log RAP.
5. The ESS Board rarely fails, do not replace the ESS Board, contact Support for further instructions.

027-722 Extension Server Timeout RAP

027-722 Application interface during web service interface - timeout.

Procedure

Perform the steps that follow:

1. Advise the customer:
   a. That if a number of documents is specified for scanning, scan one document and store it.
   b. That when scanning and storing are successful, change the application interface timeout value. If scanning and storing are not successful,
   c. To check that the scan document can be uploaded from the PC browser. When uploading is successful, change the application interface timeout value.
2. Check the version of Controller ROM. If it is not the latest, download and update to the latest software revision. (Refer to GP 9 Firmware Version Upgrade)
3. Switch the power off then on. Get the procedures for reproducing an error according to the operation that was performed when the error occurred.
   a. Check the exact occurrence timing during job execution.
   b. Check the job settings from the Panel.
   c. Collect other information as much as possible to reproduce the error.
4. Obtain logs immediately after the error has occurred without turning the power off and on. Perform the 2.6 Log RAP.
5. The ESS Board rarely fails, contact Support for further instructions.

027-723 Extension Server Authentication Fail RAP

027-723 Application interface during web service interface - authentication failure.

Procedure

Perform the steps that follow:

1. Have the customer check the user name and password to be entered for creating a job flow.
2. Check the version of Controller ROM. If it is not the latest, download and update to the latest software revision. (Refer to GP 9 Firmware Version Upgrade)
3. Switch the power off then on. Get the procedures for reproducing an error according to the operation that was performed when the error occurred.
   a. Check the exact occurrence timing during job execution.
   b. Check the job settings from the Panel.
   c. Collect other information as much as possible to reproduce the error.
4. Obtain logs immediately after the error has occurred without turning the power off and on. Perform the 2.6 Log RAP.
5. The ESS Board rarely fails, contact Support for further instructions.

027-724, 725, 726 Extension Server Access Fail RAP

027-724 Application interface during web service interface - access failure.

027-725 Application interface during web service interface - job operation failure.

027-726 Application interface during web service interface - unknown job status.

Procedure

Perform the steps that follow:

1. Have the customer check that the application interface is working correctly.
2. Check the version of Controller ROM. If it is not the latest, download and update to the latest software revision. (Refer to GP 9 Firmware Version Upgrade)
3. Switch the power off then on. Get the procedures for reproducing an error according to the operation that was performed when the error occurred.
   a. Check the exact occurrence timing during job execution.
   b. Check the job settings from the Panel.
   c. Collect other information as much as possible to reproduce the error.
4. Obtain logs immediately after the error has occurred without turning the power off and on. Perform the 2.6 Log RAP.
5. The ESS Board rarely fails, contact Support for further instructions.

027-727 Extension Server Parameters RAP

027-727 Application interface during web service - invalid parameter.

Procedure

Perform the steps that follow:

1. Have the customer check the parameters for creating a job flow.
2. Check the version of Controller ROM. If it is not the latest, download and update to the latest software revision. (Refer to GP 9 Firmware Version Upgrade)
3. Switch the power off then on. Get the procedures for reproducing an error according to the operation that was performed when the error occurred.
   a. Check the exact occurrence timing during job execution.
   b. Check the job settings from the Panel.
   c. Collect other information as much as possible to reproduce the error.
4. Obtain logs immediately after the error has occurred without turning the power off and on. Perform the 2.6 Log RAP.
5. The ESS Board rarely fails, contact Support for further instructions.

027-728 Extension Server File Exceeded RAP

027-728 The number of files requested to be sent exceeded the maximum number of files that can be sent during Web service interface (this occurs when a single-page document is being stored).

Procedure

Perform the steps that follow:

1. Have the customer set a job so that the maximum number of files that can be sent will not be exceeded.
2. Check the version of Controller ROM. If it is not the latest, download and update to the latest software revision. (Refer to GP 9 Firmware Version Upgrade)
3. Switch the power off then on. Get the procedures for reproducing an error according to the operation that was performed when the error occurred.
   a. Check the exact occurrence timing during job execution.
   b. Check the job settings from the Panel.
   c. Collect other information as much as possible to reproduce the error.
4. Obtain logs immediately after the error has occurred without turning the power off and on. Perform the 2.6 Log RAP.
5. The ESS Board rarely fails, contact Support for further instructions.

027-730 SMTP Mail Division Error RAP

027-730 A mail was split in linking to the system.

Procedure

Have the customer increase the preset pagination value, or reduce the number of original pages scanned.

027-732 Server Access Error RAP

027-732 Job template server access error.

Procedure

1. Have the customer check that the server disk is normal and has free space, and then retry the operation.
2. Obtain logs immediately after the error has occurred without turning the power off and on. Perform the 2.6 Log RAP.
3. The ESS Board rarely fails, do not replace the ESS Board, contact Support for further instructions.

027-733 Server SSL Error RAP

027-733 The SSL setting for the job template server did not become enabled.

Procedure

1. Have the customer check that the SSL setting for the job template server is enabled.
2. Have the customer retry the same operation.
3. Obtain logs immediately after the error has occurred without turning the power off and on. Perform the 2.6 Log RAP.
4. The ESS Board rarely fails, do not replace the ESS Board, contact Support for further instructions.

027-734 Server Certificate Error RAP

027-734 The SSL setting for the job template server did not become enabled.

Procedure

Have the customer:

1. Using the HTTPS protocol, check whether the job template server is accessible from the PC.
2. Check whether the SSL server certificate of the job template server is registered in the device.
3. Check whether the SSL server certificate of the job template server is valid. For example, check that:
   a. The certificate has not expired yet.
   b. The time that is set in the device is correct.
   c. It is not in the discard list.
   d. The certificate path of the SSL server certificate and import any necessary CA certificate.
4. If the certificate is not registered in the job template server, disable the device certificate validation.
5. Have the customer retry the same operation.
6. Obtain logs immediately after the error has occurred without turning the power off and on. Perform the 2.6 Log RAP.
7. The ESS Board rarely fails, do not replace the ESS Board, contact Support for further instructions.

027-735 Device SSL Configuration Error RAP

027-735 When SSL transfer was instructed, the SSL setting of the device is disabled.

Procedure

1. Have the customer enable the SSL settings of the machine or specify HTTP as the transfer protocol.
2. Have the customer retry the same operation.
3. Obtain logs immediately after the error has occurred without turning the power off and on. Perform the 2.6 Log RAP.
4. The ESS Board rarely fails, do not replace the ESS Board, contact Support for further instructions.

027-736 Device Certificate Error RAP

027-736 When server certificate validation is instructed, the server certificate validation of the device is disabled.

Procedure

1. Have the customer enable the server certificate validation settings of the machine or disable the server certificate validation setting during transfer.
2. Have the customer retry the same operation.
3. Obtain logs immediately after the error has occurred without turning the power off and on. Perform the 2.6 Log RAP.
4. The ESS Board rarely fails, do not replace the ESS Board, contact Support for further instructions.

027-737 Template Server Read Error RAP

027-737 An error was received from the server to a FTP command “TYPE A”, “LIST”, or “RETR”.

Procedure

Perform the steps that follow:

1. Have the customer check that Read Authorization is established for the storage destination server directory set as a resource.

027-739 Invalid Template Server Path RAP

027-739 An error was received from the server to the FTP command “CWD”.

Procedure

Perform the steps that follow:

1. Have the customers set the resource of the storage destination path from the client PC.
2. Update the software to the latest version, GP 9.
3. Have the customer retry the same operation.
4. Obtain logs immediately after the error has occurred without turning the power off and on. Perform the 2.6 Log RAP.
5. The ESS Board rarely fails, do not replace the ESS Board, contact Support for further instructions.

027-740 Template Server Login Error RAP

027-740 Login to the FTP Server failed.

Procedure

Perform the steps that follow:

1. Have the customer check the user information:
   a. Set the log-in name and password in the job template file storage destination.
   b. From some other PC connected to the network, check that they can log in with the relevant account.
   c. From a client PC, set a login name and password as a resource
2. Update the software to the latest version, GP 9.
3. Have the customer retry the same operation.
4. Obtain logs immediately after the error has occurred without turning the power off and on. Perform the 2.6 Log RAP.
5. The ESS Board rarely fails, do not replace the ESS Board, contact Support for further instructions.

027-741 Template Server Connect Fail RAP

027-741 Cannot connect to the job template pool server.

Procedure

Perform the steps that follow:

1. Have the customer:
   a. Check hat the network cable is connected correctly.
   b. From the destination server, ping the machine.
   c. Perform the ping test on the destination server from PSW.
   d. From a client PC, check that the FTP connection to the destination server is possible.
2. Update the software to the latest version, GP 9.
3. Have the customer retry the same operation.
4. Obtain logs immediately after the error has occurred without turning the power off and on. Perform the 2.6 Log RAP.
5. The ESS Board rarely fails, do not replace the ESS Board, contact Support for further instructions.

027-743 Template Server Install Error RAP

027-743 The address format of the job template pool server is incorrect.

Procedure

Perform the steps that follow:

1. Have the customer set the parameters related to the job template pool server.
2. Update the software to the latest version, GP 9.
3. Have the customer retry the same operation.
4. Obtain logs immediately after the error has occurred without turning the power off and on. Perform the 2.6 Log RAP.
5. The ESS Board rarely fails, do not replace the ESS Board, contact Support for further instructions.

027-744 Template Server Error 1 RAP

027-744 An error occurred while calling the DNS resolution library.

Procedure

Perform the steps that follow:

1. Have the customer check the connection to the DNS and whether the job template pool server domain name has been registered in the DNS.
2. Update the software to the latest version, GP 9.
3. Have the customer retry the same operation.
4. Obtain logs immediately after the error has occurred without turning the power off and on. Perform the 2.6 Log RAP.
5. The ESS Board rarely fails, do not replace the ESS Board, contact Support for further instructions.

027-745 Template Server Error 2 RAP

027-745 The job template pool server address cannot be resolved (the DNS address is not set).

Procedure

Perform the steps that follow:

1. Have the customer set the DNS address or set the job template pool server address using IP address.
2. Update the software to the latest version, GP 9.
3. Have the customer retry the same operation.
4. Obtain logs immediately after the error has occurred without turning the power off and on. Perform the 2.6 Log RAP.
5. The ESS Board rarely fails, do not replace the ESS Board, contact Support for further instructions.

027-746 Job Template Pool Server Not Ready RAP

027-746 The port of the protocol specified in job template pool server settings has not started.

Procedure

Perform the steps that follow:

1. Have the customer start the port of the protocol (FTP client or SMB) specified in job template pool server settings.
2. Update the software to the latest version, GP 9.
3. Have the customer retry the same operation.
4. Obtain logs immediately after the error has occurred without turning the power off and on. Perform the 2.6 Log RAP.
5. The ESS Board rarely fails, do not replace the ESS Board, contact Support for further instructions.

027-750 Fax Document Incongruent RAP

027-750 Fax Document Incongruent

(1) With Internet FAX Document E-mail and Internet FAX Transfer prohibited, Internet FAX Document E-mail and Internet FAX Transfer instructions were received.

(2) Printing Scan and Printer documents was instructed during interruption.

Procedure

Perform the steps that follow:

1. For Internet FAX received document, enable the transfer setting.
2. Clear interruption and print when printing Scan and Printer documents during interruption.
3. Update the software to the latest version, GP 9.
4. Have the customer retry the same operation.
5. Obtain logs immediately after the error has occurred without turning the power off and on. Perform the 2.6 Log RAP.
6. The ESS Board rarely fails, do not replace the ESS Board, contact Support for further instructions.

027-751 Job Template Analysis Error RAP

027-751 Instruction analysis error.

Procedure

Perform the steps that follow:

1. Have the customer re-examine the contents of the instruction.
2. Update the software to the latest version, GP 9.
3. Have the customer retry the same operation.
4. Obtain logs immediately after the error has occurred without turning the power off and on. Perform the 2.6 Log RAP.
5. The ESS Board rarely fails, do not replace the ESS Board, contact Support for further instructions.

027-752 Required User Entry Not Entered RAP

027-752 With the required user entry not entered, the instruction to start the job was given.

Procedure

Perform the steps that follow:

1. Have the customer:
   a. Not link the box to the instruction that requires user entry.
   b. Set preset values for the items in the instruction requiring user entry.
2. Update the software to the latest version, GP 9.
3. Have the customer retry the same operation.
4. Obtain logs immediately after the error has occurred without turning the power off and on. Perform the 2.6 Log RAP.
5. The ESS Board rarely fails, do not replace the ESS Board, contact Support for further instructions.

027-753 Job Flow Service Request Disabled RAP

027-753 Job is executed by instruction when the service is disabled.

Procedure

Perform the steps that follow:

1. Have the customer enable the service.
2. Update the software to the latest version, GP 9.
3. Have the customer retry the same operation.
4. Obtain logs immediately after the error has occurred without turning the power off and on. Perform the 2.6 Log RAP.
5. The ESS Board rarely fails, do not replace the ESS Board, contact Support for further instructions.

027-754 Job Flow Service File Signature Mismatch RAP

027-754 File signature settings mismatch in instruction.

Procedure

Perform the steps that follow:

1. Have the customer check the system data setting of the XDW/PDF signature and the signature setting that is specified in the instruction. If the system data setting is different from the setting in the instruction, either change the instruction or change the system data.
2. Update the software to the latest version, GP 9.
3. Have the customer retry the same operation.
4. Obtain logs immediately after the error has occurred without turning the power off and on. Perform the 2.6 Log RAP.
5. The ESS Board rarely fails, do not replace the ESS Board, contact Support for further instructions.

027-757 Extension Server SSL Fail RAP

027-757 Web application linkage during service linkage SSL access failed.

Procedure

Perform the steps that follow:

1. Have the customer:
   a. Check the server/network connection.
   b. Check the communication route that can be reached.
   c. Ping the DNS server.
   d. Check if the CA certificate of the connection destination server is imported to the device by using the browser.
   e. Check if the device does not go through the proxy that SSL has the function to check the communication details SSL.
   f. Specify the device as out of the SSL proxy target.
   g. Check if the server supports the relevant encryption method.
   h. Set the client certificate to the device.
   i. Import the client certificate to the device and set to use as the client certificate.
   j. Check the daylight saving time difference to see if the date/time of the device is correct.
2. Update the software to the latest version, GP 9.
3. Have the customer retry the same operation.
4. Obtain logs immediately after the error has occurred without turning the power off and on. Perform the 2.6 Log RAP.
5. The ESS Board rarely fails, do not replace the ESS Board, contact Support for further instructions.

027-758 System Credential Setting Error RAP

027-758 Login credential setting error at remote authentication LDAP.

Procedure

Have the customer:

1. Check whether the login name and password have been set correctly.
2. Consult with the Network Administrator to check the authentication settings at the LDAP Server.

027-759 Reference Server Connection Error RAP

027-759 Reference server connection fail at remote authentication LDAP.

Procedure

Have the customer:

1. Check whether the machines network settings are set correctly.
2. Consult with the network administrator to check the connection status from the machine to the reference server.

027-760 XJT Command Fail RAP

027-760 Incorrect command from XDOD client.

Procedure

Perform the steps that follow:

1. Have the customer:
   a. Check if the parameter setting specified in XDOD client is out of system specifications.
   b. Check the XDOD client and controller versions.
2. Update the software to the latest version, GP 9.
3. Have the customer retry the same operation.
4. Obtain logs immediately after the error has occurred without turning the power off and on. Perform the 2.6 Log RAP.
5. The ESS Board rarely fails, do not replace the ESS Board, contact Support for further instructions.

027-761 Web Print Timeout RAP

027-761 Although a web print job was received, the machine did not start printing on time.

Procedure

Have the customer:

1. If on-demand print for multiple documents was instructed using the external access function, reduce the number of documents then retry it.
2. Either extend the print on demand print duration or set it to 0.
3. Update the software to the latest version, GP 9.
4. Have the customer retry the same operation.
5. Obtain logs immediately after the error has occurred without turning the power off and on. Perform the 2.6 Log RAP.
6. The ESS Board rarely fails, do not replace the ESS Board, contact Support for further instructions.

027-762 Illegal Web Print Job Ticket RAP

027-762 Although a web print job was received, the attached job execution ticket is incorrect.

Procedure

1. Update the software to the latest version, GP 9.
2. Have the customer retry the same operation.
3. Obtain logs immediately after the error has occurred without turning the power off and on. Perform the 2.6 Log RAP.
4. The ESS Board rarely fails, do not replace the ESS Board, contact Support for further instructions.

027-765 Host Name Solution Error in WebDAV RAP

027-765 DNS failed to resolve the specified host name.

Procedure

Have the customer:

1. Check that the scan document destination WebDAV server is registered in DNS.
2. Check that the DNS server connection is good.
3. Check that the DNS server is correctly configured.
4. Update the software to the latest version, GP 9.
5. Have the customer retry the same operation.
6. Obtain logs immediately after the error has occurred without turning the power off and on. Perform the 2.6 Log RAP.
7. The ESS Board rarely fails, do not replace the ESS Board, contact Support for further instructions.

027-766 Proxy Name Solution Error in WebDAV RAP

027-766 DNS failed to resolve the proxy server name.

Procedure

Have the customer:

1. Check that the proxy server name that is configured on the machine is registered in DNS.
2. Check that the DNS server connection is good.
3. Check that the address of the DNS server is correctly configured.
4. Update the software to the latest version, GP 9.
5. Have the customer retry the same operation.
6. Obtain logs immediately after the error has occurred without turning the power off and on. Perform the 2.6 Log RAP.
7. The ESS Board rarely fails, do not replace the ESS Board, contact Support for further instructions.

027-767 WebDAV Server SSL Access Fail RAP

027-767 An error has occurred during the SSL/TLS connection.

Procedure

Have the customer:

1. Check the access from the PC to the scan document destination WebDAV server.
2. Check the scan document SSL settings of the destination WebDAV server.
3. Check the scan document destination WebDAV server name and server path name.
4. Update the software to the latest version, GP 9.
5. Have the customer retry the same operation.
6. Obtain logs immediately after the error has occurred without turning the power off and on. Perform the 2.6 Log RAP.
7. The ESS Board rarely fails, do not replace the ESS Board, contact Support for further instructions.

027-768 WebDAV Server Certificate Fail RAP

027-768 There is a problem with the SSL certificate of the server.

Procedure

Have the customer:

1. Check the access from the PC to the scan document destination WebDAV server.
2. Make sure the device is registered.
3. Make sure the scan SSL server certificate of the document destination WebDAV server is correct. For example:
   a. Check the expiration date.
   b. Check that the device time is correct.
   c. Check that they are not on the disposal list.
   d. Check the SSL server certificate of the certification path.
4. If the Scan document certificate to the destination WebDAV server is not registered, disable the certificate validation of the device.
5. Update the software to the latest version, GP 9.
6. Have the customer retry the same operation.
7. Obtain logs immediately after the error has occurred without turning the power off and on. Perform the 2.6 Log RAP.
8. The ESS Board rarely fails, do not replace the ESS Board, contact Support for further instructions.

027-769 WebDAV Server Access Fail RAP

027-769 WebDAV server connection error.

Procedure

Have the customer:

1. Check the network cable connection.
2. Check the access from the PC to the Scan document destination WebDAV server.
3. Make sure the correct network interface is selected.
4. Update the software to the latest version, GP 9.
5. Have the customer retry the same operation.
6. Obtain logs immediately after the error has occurred without turning the power off and on. Perform the 2.6 Log RAP.
7. The ESS Board rarely fails, do not replace the ESS Board, contact Support for further instructions.

027-772, 774, 776 SMTP Server Error RAP

027-772 The SMTP server refused the HELO command (after connection to the server).

027-774 Unavailable letters were specified as a destination address (after connection to the server).

027-776 The SMTP server refused the EHLO command (after connection to the server).

Procedure

Advise the customer to use only ASCII letters for the machine host name and destination address.

027-775 Too Many SMTP Addresses RAP

027-775 The SMTP server refused the EHLO command (after connection to the server).

Procedure

Advise the customer to reduce the number of mail addresses.

027-777 SMTP Server Non Support RAP

027-777 The SMTP server does not support SMTP-AUTH (after connection to the server).

Procedure

Advise the customer to send mail without setting SMTP-AUTH.

027-778 No Mode Specified by SMTP-AUTH RAP

027-778 The mode specified by SMTP-AUTH was not found (after connection to the server).

Procedure

Advise the customer to contact the network administrator to check what SMTP authentication method the server uses.

027-779 Attestation-Fails by SMTP-AUTH RAP

027-779 Authentication fail (after connecting to the server).

Procedure

1. Advise the customer to check if the authentication information (user name/password) has been set correctly.
2. Update the software to the latest version, GP 9.
3. Have the customer retry the same operation.
4. Obtain logs immediately after the error has occurred without turning the power off and on. Perform the 2.6 Log RAP.
5. The ESS Board rarely fails, do not replace the ESS Board, contact Support for further instructions.

027-780 WebDAV Network Interface Fail RAP

027-780 The specified network interface can not be used.

Procedure

1. Have the customer select the network interface that can be used.
2. Update the software to the latest version, GP 9.
3. Have the customer retry the same operation.
4. Obtain logs immediately after the error has occurred without turning the power off and on. Perform the 2.6 Log RAP.
5. The ESS Board rarely fails, do not replace the ESS Board, contact Support for further instructions.

027-781 WebDAV Spool Size Over RAP

027-781 Writing of scan data spool file failed because the disk is full.

Procedure

1. Have the customer split the scan data.
2. Update the software to the latest version, GP 9.
3. Have the customer retry the same operation.
4. Obtain logs immediately after the error has occurred without turning the power off and on. Perform the 2.6 Log RAP and contact Support with the logs as required.

027-782 WebDAV Server Redirector Limit RAP

027-782 Maximum number of WebDAV server redirections has occurred.

Procedure

1. Have the customer check the redirection settings of the WebDAV server.
2. Update the software to the latest version, GP 9.
3. Have the customer retry the same operation.
4. Obtain logs immediately after the error has occurred without turning the power off and on. Perform the 2.6 Log RAP.
5. The ESS Board rarely fails, do not replace the ESS Board, contact Support for further instructions.

027-783 WebDAV User Authentication RAP

027-783 WebDAV server is not authenticated.

Procedure

Have the customer:

1. Check the access from the PC to the scan document destination WebDAV server.
2. Check the login user name and password.
3. Check the scan document destination WebDAV server name and server path name.
4. Update the software to the latest version, GP 9.
5. Have the customer retry the same operation.
6. Obtain logs immediately after the error has occurred without turning the power off and on. Perform the 2.6 Log RAP.
7. The ESS Board rarely fails, do not replace the ESS Board, contact Support for further instructions.

027-784 WebDAV Proxy Server Authentication RAP

027-784 WebDAV proxy server authentication failure.

Procedure

1. Have the customer check that the user name and password for the proxy server that was configured on the device are correct.
2. Update the software to the latest version, GP 9.
3. Have the customer retry the same operation.
4. Obtain logs immediately after the error has occurred without turning the power off and on. Perform the 2.6 Log RAP.
5. The ESS Board rarely fails, do not replace the ESS Board, contact Support for further instructions.

027-785, 786 WebDAV Server Time-Out RAP

027-785 WebDAV server response timeout.

027-786 WebDAV server network timeout.

Procedure

1. Have the customer try again later. If the situation does not improve, consult with the Network Administrator.
2. Update the software to the latest version, GP 9.
3. Have the customer retry the same operation.
4. Obtain logs immediately after the error has occurred without turning the power off and on. Perform the 2.6 Log RAP.
5. The ESS Board rarely fails, do not replace the ESS Board, contact Support for further instructions.

027-787 WebDAV File Name Duplication Fail RAP

027-787 Override is selected in the scan file name duplication when processing.

Procedure

1. Have the customer set the processing of duplicated filenames at the time of scanning job execution to anything other than Stop the Job (Not Save).
2. Update the software to the latest version, GP 9.
3. Have the customer retry the same operation.
4. Obtain logs immediately after the error has occurred without turning the power off and on. Perform the 2.6 Log RAP.
5. The ESS Board rarely fails, do not replace the ESS Board, contact Support for further instructions.

027-788, 027-793 WebDAV Request Fail RAP

027-788 Bad request answered from WebDAV server.

027-793 Error number 400 from the WebDAV server has been answered.

Procedure

Have the customer:

1. Check whether access to the directory is possible.
2. Update the software to the latest version, GP 9.
3. Have the customer retry the same operation.
4. Obtain logs immediately after the error has occurred without turning the power off and on. Perform the 2.6 Log RAP.
5. The ESS Board rarely fails, do not replace the ESS Board, contact Support for further instructions.

027-789, 791, 795 Access Forbidden RAP

027-789 Access forbidden reply from WebDAV server.

027-791 WebDAV server method not allowed.

027-795 WebDAV server not implemented.

Procedure

Have the customer:

1. Check the connection to the WebDAV server.
2. Check if read/write access in a file or folder in the specified place is set.
3. Check the specified file path.
4. Update the software to the latest version, GP 9.
5. Have the customer retry the same operation.
6. Obtain logs immediately after the error has occurred without turning the power off and on. Perform the 2.6 Log RAP.
7. The ESS Board rarely fails, do not replace the ESS Board, contact Support for further instructions.
8. Follow the procedure 2.4 NET System Fault Check if the error is Network related.

027-790, 029-792 WebDAV File Not Found RAP

027-790 WebDAV server not found.

027-792 WebDAV server conflict.

Procedure

1. Advise the customer to make sure WebDAV storage path and directory specified in the server exist.
2. Update the software to the latest version, GP 9.
3. Have the customer retry the same operation.
4. Obtain logs immediately after the error has occurred without turning the power off and on. Perform the 2.6 Log RAP.
5. The ESS Board rarely fails, do not replace the ESS Board, contact Support for further instructions.
6. Follow the procedure 2.4 NET System Fault Check if the error is Network related.

027-794 WebDAV Server Internal Fail RAP

027-794 WebDAV server internal error.

Procedure

Have the customer:

1. Check that the WebDAV server is up and running.
2. Check the access from the PC to the scan document destination WebDAV server.
3. Update the software to the latest version, GP 9.
4. Have the customer retry the same operation.
5. Obtain logs immediately after the error has occurred without turning the power off and on. Perform the 2.6 Log RAP.
6. The ESS Board rarely fails, do not replace the ESS Board, contact Support for further instructions.
7. Follow the procedure 2.4 NET System Fault Check if the error is Network related.

027-796 Email Not Printed RAP

027-796 Email print control through user settings.

Procedure

Perform the steps that follow:

1. Update the software to the latest version, GP 9.
2. Have the customer retry the same operation.
3. Obtain the log file using the log tool. Perform the 2.6 Log RAP
   - If there was a reboot after the error had occurred and hence was unable to obtain the log, set NVM (700-530) to “0” to perform log collection and return the NVM (700-530) to “1” after completing the procedure.
4. Change any possible mechanical settings for corrective actions or detection conditions and repeat the operation.
5. Switch the power off then on.Get the procedures for reproducing an error according to the operation that was performed when the error occurred.
   a. Check the exact occurrence timing during job execution.
   b. Check the job settings from the Panel.
   c. Collect other information as much as possible to reproduce the error.
6. Obtain logs immediately after the error has occurred without turning the power off and on. Perform the 2.6 Log RAP.
7. The ESS Board rarely fails, contact Support for further instructions.

027-797 Invalid Output Destination RAP

027-797 Incorrect output destination of received mail.

Procedure

Perform the steps that follow:

1. Have the customer specify the output destination that can be processed by the device, then repeat the operation.
2. Update the software to the latest version, GP 9.
3. Have the customer retry the same operation.
4. Obtain the log file using the log tool. Perform the 2.6 Log RAP
   - If there was a reboot after the error had occurred and hence was unable to obtain the log, set NVM (700-530) to “0” to perform log collection and return the NVM (700-530) to “1” after completing the procedure.
5. Change any possible mechanical settings for corrective actions or detection conditions and repeat the operation.
6. Switch the power off then on.Get the procedures for reproducing an error according to the operation that was performed when the error occurred.
   a. Check the exact occurrence timing during job execution.
   b. Check the job settings from the Panel.
   c. Collect other information as much as possible to reproduce the error.
7. Obtain logs immediately after the error has occurred without turning the power off and on. Perform the 2.6 Log RAP.
8. The ESS Board rarely fails, contact Support for further instructions.

027-798 JFS Target Document Not Found RAP

027-798 The execution target document in the instruction set does not exist.

Procedure

Perform the steps that follow:

1. Have the customer select another document, then repeat the operation.
2. Update the software to the latest version, GP 9.
3. Have the customer retry the same operation.
4. Obtain the log file using the log tool. Perform the 2.6 Log RAP
   - If there was a reboot after the error had occurred and hence was unable to obtain the log, set NVM (700-530) to “0” to perform log collection and return the NVM (700-530) to “1” after completing the procedure.
5. Change any possible mechanical settings for corrective actions or detection conditions and repeat the operation.
6. Switch the power off then on.Get the procedures for reproducing an error according to the operation that was performed when the error occurred.
   a. Check the exact occurrence timing during job execution.
   b. Check the job settings from the Panel.
   c. Collect other information as much as possible to reproduce the error.
7. Obtain logs immediately after the error has occurred without turning the power off and on. Perform the 2.6 Log RAP.
8. The ESS Board rarely fails, contact Support for further instructions.

027-799 WebDAV Server Insufficient Storage RAP

027-799 There is no free space in the storage location on the WebDAV server.

Procedure

1. Advise the customer to check whether or not there is free space in the storage location.
2. Update the software to the latest version, GP 9.
3. Have the customer retry the same operation.
4. Obtain logs immediately after the error has occurred without turning the power off and on. Perform the 2.6 Log RAP.
5. The ESS Board rarely fails, contact Support for further instructions.

028-910 Wrong Fuser Type RAP

028-910 The Fuser needs to be replaced.

Procedure

WARNING

Ensure that the electricity to the machine is switched off while performing tasks that do not need electricity. Refer to GP 4. Disconnect the power cord. Electricity can cause death or injury. Moving parts can cause injury.

Install a new Fuser, PL 7.1 Item 1.

028-912 Fusing Unit Lever Envelope Fail RAP

028-912 The Fusing Unit is set to Envelope Mode and is hence unable to process the specified paper (other than envelope).

Procedure

WARNING

Ensure that the electricity to the machine is switched off while performing tasks that do not need electricity. Refer to GP 4. Disconnect the power cord. Electricity can cause death or injury. Moving parts can cause injury.

1. Check the cable between the Fuser PL 7.1 Item 1 and MCU Board, PL 18.1 Item 1 (MFP), PL 18.5 Item 1 (SFP).
2. Install a new Fuser, REP 7.1.1.

029-700, 029-701 WebDAV Server Response RAP

029-700 Error No.500 bill from the WebDAV server has been answered.

029-701 The response from the server does not meet the specifications of the WebDAV.

Procedure

Have the customer:

1. Ensure that the WebDAV server is up and running.
2. Verify the configuration of the server.
3. Check the access from the PC to the scan document destination WebDAV server.
4. Update the software to the latest version, GP 9.
5. Have the customer retry the same operation.
6. Obtain logs immediately after the error has occurred without turning the power off and on. Perform the 2.6 Log RAP.
7. The ESS Board rarely fails, contact Support for further instructions.

029-702 WebDAV Client RAP

029-702 An unexpected error has occurred in the internal library.

Procedure

1. Update the software to the latest version, GP 9.
2. Have the customer retry the same operation.
3. Obtain logs immediately after the error has occurred without turning the power off and on. Perform the 2.6 Log RAP.
4. The ESS Board rarely fails, contact Support for further instructions.

029-704, 711 Invalid PACFile RAP

029-704 In WiFi mode, the contents of the proxy configuration file (PACFile) acquired by the proxy auto- detection function (WPAD) has detected that it is a fraud.

029-711 In Ethernet 1 mode, the contents of the proxy configuration file (PACFile) acquired by the proxy auto- detection function (WPAD) has detected that it is a fraud.

Procedure

1. Have the customer check the proxy configuration file that is stored in the HTTP server, it may be an invalid format, such as JavaScript or too large (greater than 64KB).
2. Update the software to the latest version, GP 9.
3. Have the customer retry the same operation.
4. Obtain logs immediately after the error has occurred without turning the power off and on. Perform the 2.6 Log RAP.
5. The ESS Board rarely fails, contact Support for further instructions.

029-705, 706, 709, 712, 713, 716 PACFile Communications RAP

029-705 In WiFi mode, communication time-out at the time of the proxy configuration file (PAC-File) acquisition occurs in a proxy auto detection function (WPAD).

029-706 In WiFi mode, the proxy configuration file (PACFile) the time of acquisition in a proxy auto-detection function (WPAD), connection error has occurred.

029-709 In WiFi mode, communication time-out of the storage destination URL of the PACFile proxy auto-detection function (WPAD).

029-712 In Ethernet 1 mode, communication time-out at the time of the proxy configuration file (PACFile) acquisition occurs in a proxy auto-detection function (WPAD).

029-713 In Ethernet 1 mode, the proxy configuration file (PACFile) the time of acquisition in a proxy auto-detection function (WPAD), connection error has occurred.

029-716 In Ethernet 1 mode, communication time-out of the storage destination URL of the PACFile proxy auto-detection function (WPAD).

Procedure

Have the customer:

1. Check the connection of the network cable.
2. Check the default gateway configuration.
3. Verify the subnet mask setting.
4. Check the DNS server address setting.
5. Update the software to the latest version, GP 9.
6. Have the customer retry the same operation.
7. Obtain logs immediately after the error has occurred without turning the power off and on. Perform the 2.6 Log RAP.
8. The ESS Board rarely fails, contact Support for further instructions.

029-707, 029-708, 714, 715 PACFile Not Found RAP

029-707 In WiFi mode, failed to find the proxy settings file (PACFile) in the proxy automatic detection function (WPAD).

029-708 In WiFi mode, incorrect format of the storage destination URL of PACFile acquired by the proxy auto- detection function (WPAD).

029-714 In Ethernet 1 mode, failed to find the proxy settings file (PACFile) in the proxy automatic detection function (WPAD).

029-715 In Ethernet 1 mode, incorrect format of the storage destination URL of PACFile acquired by the proxy auto- detection function (WPAD).

Procedure

Have the customer:

1. Check the URL setting of PACFile storage destination server.
2. Check the URL information PACFile set in the DHCP server is correct (if the proxy server acquisition method is WPAD).
3. If the URL is correct, check that the PACFile to the HTTP server has been registered.
4. Update the software to the latest version, GP 9.
5. Have the customer retry the same operation.
6. Obtain logs immediately after the error has occurred without turning the power off and on. Perform the 2.6 Log RAP.
7. The ESS Board rarely fails, contact Support for further instructions.

029-710, 029-717 PACFile URL Not Found RAP

029-710 In WiFi mode, failed to locate the storage destination URL of PACFile the proxy auto-detection function (WPAD).

029-717 In Ethernet 1 mode, failed to locate the storage destination URL of PACFile the proxy auto-detection function (WPAD).

Procedure

1. Request the customer network administrator verify the Internet connection proxy settings “automatically detect” is not checked.
2. The correct proxy settings for the customer network must be manually entered for the PACFile to be found. Have the customer network administrator correct the proxy issues.
3. Update the software to the latest version, GP 9.
4. Have the customer retry the same operation.
5. Obtain logs immediately after the error has occurred without turning the power off and on. Perform the 2.6 Log RAP.
6. The ESS Board rarely fails, contact Support for further instructions.

033-310 FAX Charge Function Fail RAP

033-310 The FAX send billing function was turned on although multiple lines are installed.

Procedure

Have the customer switch off the FAX send billing function or change to a single-line installation.

033-311 Invalid Address Book Data RAP

033-311 The registered contents in the address book are invalid.

Procedure

Perform dC301 NVM initialization.

033-312, 318, 324 FAX Fault RAP

033-312: Controller Not Respond When System Is Changing Mode

033-318: Image Processing Error

033-324: Usb State Change Error

Procedure

WARNING

Ensure that the electricity to the machine is switched off while performing tasks that do not need electricity. Refer to GP 4 . Disconnect the power cord. Electricity can cause death or injury. Moving parts can cause injury.

Perform the steps that follow:

1. Power down the machine then back up, GP 4 .
2. Perform OF-16 Fax Harware Check Item.

033-328, 329, 340 Failed to Initialize FAX Log RAP

033-328 The initialization of communication log library has failed.

033-329 A FAX cont error was detected.

033-340 The Pflite communication log write function returned an error.

Procedure

Perform the steps that follow:

1. Power down the machine then back up, GP 4.
2. Perform dC301 NVM initialization.
3. Perform OF-07 Fax System Fail.

033-328 to 033-336 Non-mounted Channel RAP

033-328: Failed To Initialize Fax Log

RE33-329: Detected Fax Process Failure

033-330: Foip Unrecoverable Error

033-331: Foip Controller Init Fail

033-332: Foip Cont Not Respond When System Is Booting

033-333: Foip Cont Not Respond When System Is Sleeping

033-334: Can Not Send A Message To Foip Cont

033-335: Illegal Fault Code Notice

033-336: Access To A Nonmounted Channel

Procedure

Perform the OF-11 FAX Job Fail RAP.

033-339 FAX 2 Not Responding RAP

033-339 Fax 2 Not Respond When System Is Sleeping

When transitioning to sleep, there is no response from FAX controller 2.

Procedure

Power down the machine then back up, GP 4 .

033-363 FAX Card Reset (Reboot) RAP

033-363 The controller reset the FAX card because the FAX card did not respond.

Procedure

Power down the machine then back up, GP 4, **the error persists,**

Perform the OF-12 033-363 Fail RAP.

033-500 to 033-507 Remote Machine Error RAP

033-500 Modem CS operation error.

033-501 The number of receive line is 0.

033-502 There was no response for up to the 3rd post message.

033-503 T1 timeout has occurred.

033-504 T2 timeout has occurred.

033-505 T5 timeout has occurred.

033-506 DCN received.

033-507 No receiving capability in the remote machine.

Procedure

Perform the steps that follow:

1. Have the customer check the status of the remote machine, If the remote machine is good, repeat the operation.
2. If the fault persists, perform the OF-11 FAX Job Fail RAP.

033-508, 033-511 Destination Polling Error RAP

033-508 No polling document in the remote machine.

033-511 DTS/NSC resending exceeded the limit.

Procedure

Perform the steps that follow:

1. Have the customer check the destination device for a problem, for example a document jam or mismatched password or request a polling document to prepared. Then repeat the operation.
2. If the fault persists, perform the OF-11 FAX Job Fail RAP.

033-509 DCS/NSS Resend Exceeded RAP

033-509 DCS/NSS re-send over.

Procedure

Perform the steps that follow:

1. Have the customer repeat the operation. If the problem persists after repeating the operation, check the status of the receiver at the destination side.
2. If the fault persists, perform the OF-11 FAX Job Fail RAP.

033-510 Fallback Error RAP

033-510 FTT was received at 2400 bps.

Procedure

If the fault persists, perform the OF-11 FAX Job Fail RAP.

033-514, 516, 517, 521, 522, 033-526 to 033-529 Remote Machine Error 1 RAP

033-514 Carrier broken.

033-516 EOR-Q was received.

033-517 Timeout has occurred between the ECM frames.

033-521 The system sent a reject command signal and stopped the transmission.

033-522 DTMF I/F timed out. Correct operation was not performed within the specified time.

033-526 An ECM error has occurred.

033-527 EOR-Q was sent.

033-528 RTN was sent.

033-529 RTN was received.

Procedure

Perform the steps that follow:

1. Have the customer request for the sender to check the remote machine for an error, then re-send.
2. If the fault persists, perform the OF-11 FAX Job Fail RAP.

033-523, 546, Line Not Connected RAP

033-523 Channel 1 not connected.

033-546 The dial tone could not be detected.

Procedure

Perform the steps that follow:

1. Make sure the relevant telephone cable is connected correctly.
2. If the fault persists, perform the OF-11 FAX Job Fail RAP.

033-530 DTMF Illegal Procedure RAP

033-530 An invalid procedure signal was received.

Procedure

Perform the steps that follow:

1. Advise the customer that there may be a mistake in how the operator is performing the DTMF procedure.
2. If the fault persists, perform the OF-11 FAX Job Fail RAP.

033-531, 532, 533, 544, 552, 578 Remote Machine Error 2 RAP

033-531 A reject command signal was received.

033-532 An illegal command was received.

033-533 An error has occurred at the T.30 protocol.

033-544 Busy tone was detected.

033-552 When receiving G3 image data, the detected total number of error lines exceeded the threshold value indicated in the system data.

033-578 The frame size of received command exceeded the specification value.

Procedure

Perform the steps that follow:

1. Have the customer request for the sender to check the remote machine for an error, then re-send.
2. If the fault persists, perform the OF-11 FAX Job Fail RAP.

033-535 DCN Receive at Phase B Send RAP

033-535 Phase B instruction command (DCS/NSS/NSC/DTC) was rejected at the DCN.

Procedure

Perform the steps that follow:

1. Have the customer check the recipient's address, folder information, etc. then repeat the operation.
2. If the fault persists, perform the OF-11 FAX Job Fail RAP.

033-536, 537, 540, 568, 575, 577 Send/Receive Error RAP

033-536 The ringing stops before the resource was released.

033-537 A conflict between outgoing and incoming calls has occurred and the sending was cancelled.

033-540 During the image processing for FAX print format, an error has occurred.

033-568 During FAX communication, there was no response from the FCM for the specified time.

033-575 Polarity inversion was detected.

033-577 An underrun has occurred at the modem.

Procedure

Perform the steps that follow:

1. Have the customer repeat the operation.
2. If the fault persists, perform the OF-11 FAX Job Fail RAP.

033-541, 033-566 No Destination Specified RAP

033-541 The FAX Card is not able to call because there is no dial.

033-566 The FAX card is unable to call because there is no dial.

Procedure

Perform the steps that follow:

1. Have the customer specify the appropriate address by using the speed dial number that is registered with the correct FAX address number, etc.
2. If the fault persists, perform the OF-11 FAX Job Fail RAP.

033-543, 567, 576, 702, 703 Dial Error RAP

033-543 There is incorrect (illegal) data in the dial data.

033-567 There is incorrect (illegal) data in the dial data.

033-576 The dial data is invalid.

033-702 Digits of the indicated dial data exceeds the number of allowed number of digits.

033-703 The indicated dial data digits exceed the number of allowed digits.

Procedure

Perform the steps that follow:

1. Have the customer check the dial data, then repeat the operation.
2. If the fault persists, perform the OF-11 FAX Job Fail RAP.

033-545 T0 Timeout RAP

033-545 The remote machine might not be a facsimile, or it is not in the facsimile mode.

Procedure

Perform the steps that follow:

1. Have the customer check the address number and whether the remote party is a FAX machine.
2. If the fault persists, perform the OF-11 FAX Job Fail RAP.

033-547 Abort During Transmission RAP

033-547 Aborted during transmission (operation was cancelled).

Procedure

For information only. No service action necessary.

033-548 No Manual Send Line RAP

033-548 There are no lines for manual transmission.

Procedure

Perform the steps that follow:

1. Use a phone to establish communications, then have the customer repeat the operation.
2. If the fault persists, perform the OF-11 FAX Job Fail RAP.

033-549, 551, 583 FAX Service Disabled RAP

033-549 The system cannot receive the service because it was prohibited to do the operation.

033-551 When a phone or FAX communication was about to end, an operation was performed on that job.

033-583 The request received a connection refused response because the target connection is temporarily out of resource.

Procedure

Perform the steps that follow:

1. Have the customer wait for a while, then repeat the operation.
2. If the fault persists, perform the OF-11 FAX Job Fail RAP.

033-550 Cannot Disable FAX Service RAP

033-550 The system is attempting to transition to the diag mode, etc., but was unable to do so because FAX communication is in progress.

Procedure

Perform the steps that follow:

1. Have the customer wait for the job to complete its transmission, then repeat the operation.
2. If the fault persists, perform the OF-11 FAX Job Fail RAP.

033-553 No Folder/Relay RAP

033-553 The F code that was sent from the remote machine is instructing a function that does not exist in the local machine.

Procedure

Perform the steps that follow:

1. Have the customer consult with the operator of the remote machine on whether the wrong F Code was input.
2. If the fault persists, perform the OF-11 FAX Job Fail RAP.

033-554 Wrong Password/Receive Banned RAP

033-554 Data received without a password/a mismatch of passwords, or a mismatch of the select receive number. Mismatch of password or communication from the user other than those who are in the select receive list.

Procedure

Perform the steps that follow:

1. For a single occurrence, take no action.
2. If the fault persists, perform the OF-11 FAX Job Fail RAP.

033-555, 033-556 Incorrect Password RAP

033-555 The machine password of local machine does not match the one that was sent from the remote machine.

033-556 The remote ID was not sent from the remote machine. The sending password and the remote ID do not match.

Procedure

Perform the steps that follow:

1. Have the customer consult with the operator of the remote machine on whether the wrong machine password was input.
2. If the fault persists, perform the OF-11 FAX Job Fail RAP.

033-557, 033-565 Destinations or Services Exceeded RAP

033-557 The total number of requested services or total number of addresses exceeded the number defined by the specifications.

033-565 The total number of requested addresses exceeded the number defined by the specifications.

Procedure

Perform the steps that follow:

1. Have the customer wait for the jobs that are waiting to be sent to decrease or reduce the number of addresses, then try again.
2. If the fault persists, perform the OF-11 FAX Job Fail RAP.

033-558, 033-559 Remote ID Rejection RAP

033-558 The remote ID of the remote terminal is registered in the blacklist of the local machine.

033-559 The remote ID was not sent from the remote terminal.

Procedure

Perform the steps that follow:

1. Have the customer change the FAX machine setting to be able to receive FAX messages even if destination does not send remote ID.
2. If the fault persists, perform the OF-11 FAX Job Fail RAP.

033-560, 561, 562 TRESS/RCC RAP

033-560 For TRESS and RCC, the authentication ID that was sent from the remote terminal was invalid.

033-561 TRESS and RCC cannot be performed as the operation is prohibited or a Job is in progress.

033-562 RCC execution was put on hold as it is in the operation prohibited mode.

Procedure

Perform the steps that follow:

1. For a single occurrence, take no action.
2. If the fault persists, perform the OF-11 FAX Job Fail RAP.

033-563, 033-569 No Printable Paper Size RAP

033-563 When formatting, registered paper that is not applicable to the document size to be printed was loaded.

033-569 The paper tray status is such that paper with orientation that can be output can only be supplied from the SMH.

Procedure

Perform the steps that follow:

1. Have the customer specify the correct paper size and check that the paper trays are correctly loaded with the paper guides correctly adjusted.
2. If the fault persists, perform the OF-11 FAX Job Fail RAP.

033-564, 033-570 Power Off During Transmission RAP

033-564 An error due to power off during transmission. The power switch was turned off, or the system was reset.

033-570 An error due to power off during transmission. the power switch was turned off, or the system was reset.

Procedure

Perform the steps that follow:

1. Have the customer:
   a. Wait for a while then check the FAX function settings and dial numbers, then resend data if needed.
   b. Check the self-terminal status and line status, then perform the operation again.
2. If the fault persists, perform the OF-11 FAX Job Fail RAP.

033-571, 033-588 Manual Send Job Cancelled RAP

033-571 At the start of the Job, the report area for FAX was detected to be full and the job was cancelled.

033-588 T38 packet loss causing unrecoverable error was detected.

Procedure

Perform the steps that follow:

1. Have the customer wait for some of the jobs that are queued to be completed or cancelled, then retry the operation.
2. If the fault persists, perform the OF-11 FAX Job Fail RAP.

033-572 FAX Report Print Job Cancelled RAP

033-572 At the start of the job, job full was detected, only the FAX report document is stored, and the printing of FAX report was cancelled.

Procedure

Perform the steps that follow:

1. For a single occurrence, take no action.
2. If the fault persists, perform the OF-11 FAX Job Fail RAP.

033-573 Domain Regulation Check Error RAP

033-573 The address was specified with a prohibited domain.

Procedure

Perform the steps that follow:

1. Have the customer check the address and input the correct one.
2. If the fault persists, perform the OF-11 FAX Job Fail RAP.

033-580 Missing VoIP Gateway RAP

033-580 There is no existing VoIP gateway that correspond to the phone number that was input.

Procedure

Perform the steps that follow:

1. Have the customer set the correct device VoIP gateway address to correspond with the phone number that was input.
2. If the fault persists, perform the OF-11 FAX Job Fail RAP.

033-586 T38 Protocol Not Ready RAP

033-586 Unable to communicate as the IP address is unresolved. Unable to communicate as the registration to registrar server was not completed when using a SIP server.

Procedure

Perform the steps that follow:

1. Have the customer:
   a. Wait for a while, then try to send again.
   b. Make it so that the IP address can be obtained and registered to the registrar server.
2. If the fault persists, perform the OF-11 FAX Job Fail RAP.

033-593 Cancelled By Remote Peer RAP

033-593 An interrupt process was performed at the communication partner side.

Procedure

Perform the steps that follow:

1. Have the customer request for the sender to re-send.
2. If the fault persists, perform the OF-11 FAX Job Fail RAP.

033-700 T1 Timeout Fail RAP

033-700 T1 timeout has occurred when sending or at phase B and later when receiving.

Procedure

Perform the steps that follow:

1. Have the customer:
   a. Repeat the operation if the fault occurs while sending.
   b. Request for the sender to re-send if the fault occurs when receiving.
   c. Check the remote machine for an error.
2. If the fault persists, perform the OF-11 FAX Job Fail RAP.

033-701 Retry Timeout RAP

033-701 The communication did not end normally within the retry timeout time.

Procedure

If the fault persists, perform the OF-11 FAX Job Fail RAP.

033-710, 712, 713, 717, 718, 719, 721 Document Not Found RAP

033-710 The specified document cannot be found

033-712 Invalid document, host memory full

033-713 Incorrect chain-link number.

033-717 The verification result of the specified password was NG.

033-718 The document was not found in the polling sending box or the specified folder.

033-719 The document was not found in the polling sending box or the specified folder.

033-721 The specified page cannot be generated.

Procedure

Perform the steps that follow:

1. Have the customer repeat the operation.
2. If the fault persists, perform the OF-11 FAX Job Fail RAP.

033-716 No Specified Folder RAP

033-716 The status in which the job cannot be performed was detected during EP-TRESS operation.

Procedure

Perform the steps that follow:

1. For a single occurrence, take no action.
2. If the fault persists, perform the OF-11 FAX Job Fail RAP.

033-724 FAX Receive Memory Over Flow RAP

033-724 The receive operation was aborted, the maximum limit of receivabe image data for one FAX communication was exceeded.

Procedure

Perform the steps that follow:

1. Ask the sender to divide the document into two or more parts or reduce the resolution of the data, **the error persists**,
2. If the fault persists, perform the OF-11 FAX Job Fail RAP.

033-726, 728, 734, 737, 738, 751 FAX Printing Error RAP

033-726 Two sided printing not available when receiving FAX (mixed size).

033-728 Formatting for FAX auto print was aborted because the instruction for FAX manual print was sent during the operation.

033-734 Job was cancelled because FAX print and FAX auto report were started at the same time.

033-737 The FAX cont detected a failure and could not continue processing the job.

033-738 The FAX cont detected an error in JBIG data during coding/decoding of the JBIG data.

033-751 An activity report is generated during the time period where print is prohibited and since the machine is in sleep mode, it started the process to place the report on hold.

Procedure

Perform the steps that follow:

1. For a single occurrence, take no action.
2. If the fault persists, perform the OF-11 FAX Job Fail RAP.

033-733, 735, 741, 743, 744, 745, 746, 750 FAX Document Number Error RAP

033-733 The number of job documents related to the job could not be obtained.

033-735 FAX receive - buffer allocate timeout.

033-741 When transferring image data to the FAX card, the conditions for sending the response to the FAX card did not match.

033-743 When receiving image data from the FAX card, the conditions for sending the response to the FAX card did not match.

033-744 When receiving image data from the FAX card, the conditions for sending the response to the FAX card did not match.

033-745 When receiving image data from the FAX card, the conditions for sending the response to the FAX card did not match.

033-746 When transferring image data to the FAX card, the conditions for sending the response to the FAX card did not match.

033-750 During formatting, when image data was retrieved from the FAX card, even though the image data was determined to be free from error, extension failed.

Procedure

Perform the steps that follow:

1. Have the customer repeat the operation.
2. Have the customer break up the number pages or reduce the number of images in the send operation.
3. If the fault persists, perform the OF-11 FAX Job Fail RAP.

041-310 IM Logic Fail RAP

041-310 IM software control error detected.

Procedure

WARNING

Ensure that the electricity to the machine is switched off while performing tasks that do not need electricity. Refer to GP 4. Disconnect the power cord. Electricity can cause death or injury. Moving parts can cause injury.

Perform the steps that follow:

1. Switch the machine off, then on, GP 4.
2. Reload the software, GP 9.
3. If the fault persists, install new components as necessary:
   - MCU BOARD, REP 18.1.1 (MFP) REP 18.1.1 (SFP)
   - ESS BOARD, REP 18.1.5 (MFP) REP 18.5.1 (SFP)

041-340 to 363 MCU NVM (EEPROM) Fail RAP

041-340 NVM (EEPROM) Data Abnormality.

041-341 NVM (EEPROM) Access Error.

041-342 NVM (EEPROM) Read Verify Error.

041-343 NVM (EEPROM) Write Verify Error.

041-363 NVM (EEPROM) DataBroken Error.

Initial Actions

WARNING

Ensure that the electricity to the machine is switched off while performing tasks that do not need electricity. Refer to GP 4. Disconnect the power cord. Electricity can cause death or injury. Moving parts can cause injury.

. Check that the NVM values that follow are set to default:

- 740-016 Range Over Chain No
- 740-017 Range Over Link No
- 740-018 Range Over Chain Link
- 740-019 Range Over Value
- 740-020 Write in Progress Range Over Chain No
- 740-021 Write in Progress Range Over Link No

Procedure

Perform the steps that follow:

1. Switch the machine off, then on, GP 4.
2. Reload the software, GP 9.
3. dC301 NVM Initialization.
4. If the fault persists, install new components as necessary:
   - MCU BOARD, REP 18.1.1(MFP) REP 18.1.1(SFP)
   - ESS BOARD, REP 18.1.5(MFP).REP 18.5.1(SFP)

041-388 Logic Fail RAP

041-388 When fatal abnormality was detected in marking control.

Procedure

Perform the steps that follow:

1. Switch the machine off, then on, GP 4
2. Reload the software, GP 9

041-603, 604 Temp/Humidity Sensor Fail RAP

041-603 Temperature Sensor value is outside the upper and lower limit range.

041-604 Humidity Sensor value is outside the upper and lower limit range.

Procedure

Perform the steps that follow:

1. Switch the machine off, then on, GP 4
2. Install a new CTD ASSY PL 6.1 Item 8

042-325 Device Fault RAP

042-325 Abnormal rotation of the Drive Motor PL 3.1 Item 1.

Possible Parts Affected

- FAN MAIN PL 4.1 Item 1
- LV MCU HARNESS ASSY, PL 18.4 Item 5 (MFP) PL 18.8 Item 5 (SFP)
- LVPS Board PL 18.1 Item 16 (MFP), PL 18.5 Item 16 (SFP)
- MCU Board, PL 18.1 Item 1 (MFP), PL 18.5 Item 1 (SFP)

Procedure

WARNING

Ensure that the electricity to the machine is switched off while performing tasks that do not need electricity. Refer to GP 4. Disconnect the power cord. Electricity can cause death or injury. Moving parts can cause injury.

Perform the steps that follow:

1. Switch off then switch on the machine, GP 4.
2. Execute the diagnostic dC330 [042-001], and check the Main Fan rotation.
   a. Install a new MCU Board, REP 18.1.1 (MFP), REP 18.5.1 (SFP)
3. Rotate the Main Fan manually looking for any signs of wear or resistance to rotation.
4. Check the connections at the Main Fan and the LVPS Board, verify P/J289 is fully seated.
5. Check the connections at the LVPS Board and the MCU Board, verify P/J284 and P/J280 are fully seated.
6. Check continuity between the LVPS Board and the MCU Board verify each cable of P/J284<=>P/J280 is continuous.
   - Install a new LV MCU HARNESS ASSY, PL 18.4 Item 5 (MFP) PL 18.8 Item 5 (SFP).
7. Install a new FAN MAIN REP 4.1.1
8. Install a new LVPS Board REP 18.1.16 (MFP) REP 18.5.16 (SFP)

042-335 Device Fault (Main FAN Fail) RAP

042-335 Abnormal rotation of the Main Fan.

Possible Parts Affected

- FAN MAIN PL 4.1 Item 1
- LV MCU HARNESS ASSY, PL 18.4 Item 5 (MFP) PL 18.8 Item 5 (SFP)
- LVPS Board PL 18.1 Item 16 (MFP), PL 18.5 Item 16 (SFP)
- MCU Board, PL 18.1 Item 1 (MFP), PL 18.5 Item 1 (SFP)

Procedure

WARNING

Ensure that the electricity to the machine is switched off while performing tasks that do not need electricity. Refer to GP 4. Disconnect the power cord. Electricity can cause death or injury. Moving parts can cause injury.

Perform the steps that follow:

1. Switch off then switch on the machine, GP 4.
2. Execute the diagnostic dC330 [042-001], and check the Main Fan rotation.
   a. Install a new MCU Board, REP 18.1.1 (MFP), REP 18.5.1 (SFP)
3. Rotate the Main Fan manually looking for any signs of wear or resistance to rotation.
4. Check the connections at the Main Fan and the LVPS Board, verify P/J289 is fully seated.
5. Check the connections at the LVPS Board and the MCU Board, verify P/J284 and P/J280 are fully seated.
6. Check continuity between the LVPS Board and the MCU Board verify each cable of P/J284<=>P/J280 is continuous.
   - Install a new LV MCU HARNESS ASSY, PL 18.4 Item 5 (MFP) PL 18.8 Item 5 (SFP).
7. Install a new FAN MAIN REP 4.1.1
8. Install a new LVPS Board REP 18.1.16 (MFP) REP 18.5.16 (SFP)

043-342 Sub Motor Fail RAP

043-342 Sub Motor does not rotate correctly

WARNING

Ensure that the electricity to the machine is switched off while performing tasks that do not need electricity. Refer to GP 4 . Disconnect the power cord. Electricity can cause death or injury. Moving parts can cause injury.

Possible Parts Affected

- Sub Motor [DRIVE ASSY MAIN] PL 3.1 Item 1
- HARNESS ASSY MCU-MOT-C PL 18.4 Item 4
- MCU Board PL 18.1 Item 1(MFP) PL 18.5 Item 1(SFP)

Procedure

WARNING

Ensure that the electricity to the machine is switched off while performing tasks that do not need electricity. Refer to GP 4. Disconnect the power cord. Electricity can cause death or injury. Moving parts can cause injury.

Perform the steps that follow:

1. Power down then power up the machine, GP 4.
2. Execute the diagnostic dC330 [071-065], and check the Sub Motor rotation.
3. Check the continuity between the Sub Motor and the MCU Board, verifying each cable of P/J573-4 pin<=>P/J570-2 pin for continuity. (Refer to Figure 1).
4. Check the connection between the Main Motor and the MCU Board (P/J571 and P/J570) are fully seated.
5. Check the continuity in each cable between the Main Motor and the MCU Board P/J571<=>P/J570.
   - Install a new HARNESS ASSY MCU-MOT-C PL 18.4 Item 4.
6. Check the connection between the Main Motor and the LVPS Board (P/J572 and P/J288) are fully seated.
7. Check the continuity in each cable between the Main Motor and the LVPS Board / J572<=>P/J288.
   - Install a new HARNESS ASSY MOT PL 18.4 Item 3.
8. Close all interlock switches and verify the voltage from the LVPS Board ground and the P/J288-1 pin is about +24 VDC.
   a. Refer to +24 VDC Power RAP, **the error persists,**
9. Install a new Main Motor [DRIVE ASSY MAIN] REP 3.1.1
10. Install a new MCU Board REP 18.1.1 (MFP), REP 18.5.1 (SFP)

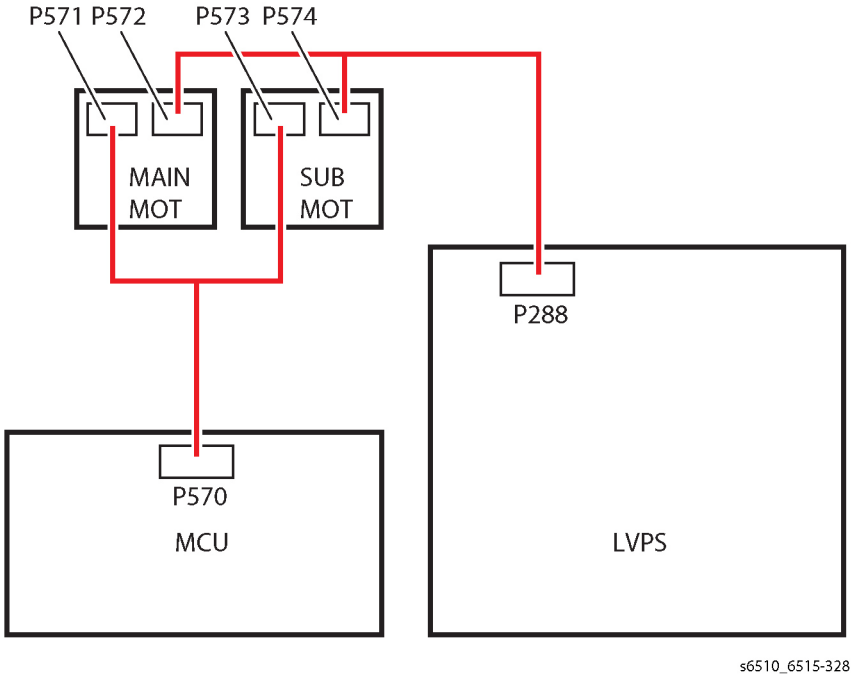

Figure 1

042-348 Over Temperature Detect Fail RAP

042-348 Temperature inside of the machine increases more than specified value and unable to continue printing.

Procedure

WARNING

Ensure that the electricity to the machine is switched off while performing tasks that do not need electricity. Refer to GP 4. Disconnect the power cord. Electricity can cause death or injury. Moving parts can cause injury.

Refer to the procedure that follows as necessary:

- GP 10 How to Check a Motor.

Enter dC330 code 042-003 to run the Main Motor, PL 3.1 Item 1,
The fault may be intermittent. Check the connection between the Main Motor P/J571 pin 2 and the MCU BOARD P/J570 pin 9 for open circuit, short circuit or poor contact.
Install new components as necessary:

- MCU Board, REP 18.1.1 (MFP), REP 18.5.1(SFP)
- ESS BOARD, REP 18.1.5 (MFP), REP 18.5.5 (SFP)

042-610 Turned Slow Mode Detect Fail RAP

042-610 Temperature inside of the machine increases and printing speed restraint is required.

Procedure

WARNING

Ensure that the electricity to the machine is switched off while performing tasks that do not need electricity. Refer to GP 4. Disconnect the power cord. Electricity can cause death or injury. Moving parts can cause injury.

Refer to the procedure that follows as necessary:

- GP 10 How to Check a Motor.

Enter dC330 code 042-003 to run the Main Motor, PL 3.1 Item 1.
The fault may be intermittent. Check the connection between the Main Motor P/J571 pin 2 and the MCU BOARD P/J570 pin 9 for open circuit, short circuit or poor contact.
Install new components as necessary:

- MCU Board, REP 18.1.1 (MFP), REP 18.5.1(SFP)
- ESS BOARD, REP 18.1.5 (MFP), REP 18.5.5 (SFP)

044-370 and 045-310 PH Comm Fail RAP

045-370 Communication failure between MCU Board and ESS Board

045-310 Controller image preparation failure detected.

WARNING

Ensure that the electricity to the machine is switched off while performing tasks that do not need electricity. Refer to GP 4 . Disconnect the power cord. Electricity can cause death or injury. Moving parts can cause injury.

Procedure

1. Switch the machine off, then on, GP 4
2. Reload the software, GP 9
3. Check the harness between the MCU Board PL 18.1 Item 1 (MFP) PL 18.5 Item 1 (SFP) and the ESS Board PL 18.1 Item 5 (MFP) PL 18.5 Item 5 (SFP) for an open circuit, short circuit, or poor contact.
4. Install a new ESS Board, REP 18.1.5 (MFP) REP 18.5.5 (SFP)

045-311 Controller Communication Fail RAP

045-311 Communication failure between ESS BOARD and MCU BOARD was detected.

Procedure

WARNING

Ensure that the electricity to the machine is switched off while performing tasks that do not need electricity. Refer to GP 4. Disconnect the power cord. Electricity can cause death or injury. Moving parts can cause injury.

Perform the steps that follow:

1. Switch the machine off, then on, GP 4
2. Check the connection between the ESS BOARD PL 18.1 Item 5 (MFP) PL 18.5 Item 5 (SFP) and the MCU BOARD PL 18.1 Item 1 (MFP) PL 18.5 Item 1 (SFP)
3. Install new components in order as necessary:
   - FFC MCU ESS, REP 18.1.2 (MFP) REP 18.5.2 (SFP)
   - MCU BOARD, REP 18.1.1 (MFP) REP 18.5.1 (SFP)
   - ESS BOARD, REP 18.1.5(MFP) REP 18.5.5 (SFP)

045-370 LPH DL FAIL POWER RAP

045-370 ASIC register error during IBY initial DL check.

NOTE: *Failure occurs on LPH of all colors simultaneously. Common parts (such as power connectors on MD board) could be defective. LPH color actually failing can be checked by NVM.*

Procedure

WARNING

Ensure that the electricity to the machine is switched off while performing tasks that do not need electricity. Refer to GP 4. Disconnect the power cord. Electricity can cause death or injury. Moving parts can cause injury.

Perform the steps that follow:

1. Switch the machine off, then on, GP 4
2. Check the connection between the ESS Board and the ESS MCU FFC PL 18.1 Item 2
3. Install a new ESS BOARD, REP 18.1.5(MFP) REP 18.5.5 (SFP)
4. Install a new Guide XERO CRU REP 2.1.99.
5. Install a new LED HEAD ASSY, REP 2.1.1.

045-371 LPH DL FAIL MULT RAP

045-371 ASIC register error during IBY initial DL check.

Procedure

WARNING

Ensure that the electricity to the machine is switched off while performing tasks that do not need electricity. Refer to GP 4. Disconnect the power cord. Electricity can cause death or injury. Moving parts can cause injury.

Perform the steps that follow:

1. Switch the machine off, then on, GP 4
2. Check the connection between the ESS BOARD and the MCU BOARD.
3. Install a new ESS MCU FFC, PL 18.1 Item 2
4. Install a new MCU BOARD, REP 18.1.1 (MFP) REP 18.5.1(SFP)
5. Install a new ESS BOARD, REP 18.1.5(MFP) REP 18.5.5(SFP)

058-310, 311, 315, 316, 317, 059-314, 315, 326 FUSING ERROR RAP

058-310 Fusing Ep U4 Notrdy Nc Fail - Over Temperature on FUSING ASSY detected

058-311 Fusing Ep U4 Notrdy Sts Fail - Fuse fail detected.

058-315 FUSING ASSY HR STS Center Broken Fail - STS Sensor Fail detected.

058-316 Fusing Unit HB STS Center Low Temperature Fail - Center temperature below abnormal temperature detection limit, continuously detected more than specified abnormality detection count.

058-317 Fusing Ep U4 ShortHeater Slowheat Center Fail - Center temperature not rising as normally expected within the specified time to heat the Center.

059-314 Fault or Error - FUSING ASSY HR STS Center Disconnection Fail.

059-315 FUSING ASSY HR STS Center Over Temperature Fail - Center temperature beyond abnormal temperature detection limit, continuously detected more than specified abnormality detection count.

059-326 FUSING ASSY HR STS Disconnection Fail - STS-Center AD value that is beyond disconnection detection limit is continuously detected more than specified abnormality detection count.

Possible Causes:

- HARNESS ASSY FUSING ASSY
- HARNESS ASSY LV-MCU-C
- LVPS Board (PL 18.1 Item 16)
- FUSING ASSY (PL 7.1 Item 1)
- MCU Board (PL 18.1 Item 1)

WARNING

Ensure that the electricity to the machine is switched off while performing tasks that do not need electricity. Refer to GP 4. Disconnect the power cord. Electricity can cause death or injury. Moving parts can cause injury.

Procedure

Perform the steps that follow:

1. Switch the machine off, then on, GP 4 **the error persists,**
2. Verify the FUSING ASSY., and the drawer connector of the printer are seated correctly, **the error persists,**
3. Check the connection between the FUSING ASSY and the MCU Board and the connection between the FUSING ASSY and the LVPS Board, Figure 1.
   - Replace the Fusing Assembly REP 7.1.1
4. Verify the connection between the LVPS Board and the MCU Board, Figure 1.
5. Verify continuity between the LVPS Board P/J283 and the Fusing Assy. P/J275 for open circuit, short circuit or poor contact, **the error persists,**
   - Replace the HARNESS ASSY FUSING.
6. Verify continuity between the LVPS Board P/J284 and the MCU Board P/J280 for open circuit, short circuit or poor contact, **the error persists,**
   - Replace the HARNESS ASSY LV-MCU-C.
7. Install new components as necessary:
   - Fusing Assy., REP 7.1.1, **the error persists,**
   - MCU Board, REP 18.1.1, **the error persists,**
   - LVPS Board, REP 18.1.16

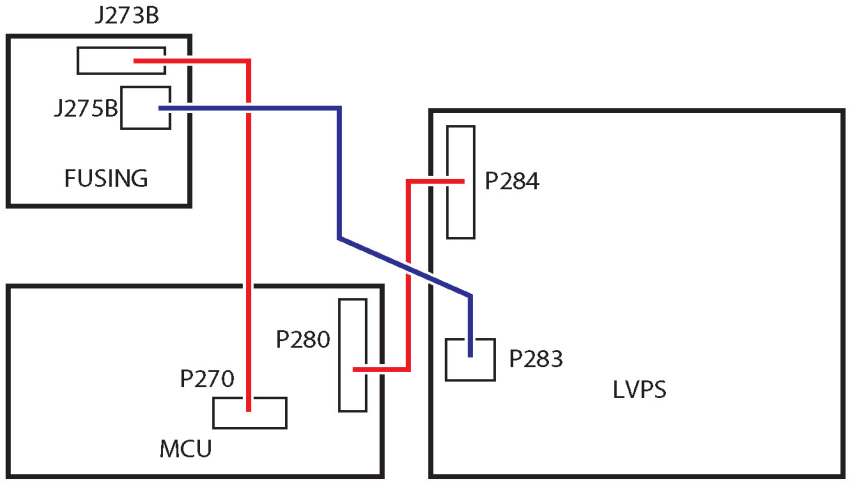

Figure 1 Fusing Assembly Connections

059-321, 324 FUSING ERROR RAP

059-321 FUSING ASSY Life End

059-324 Abnormal temperature variation on Heat Roll is detected.

Procedure

WARNING

Ensure that the electricity to the machine is switched off while performing tasks that do not need electricity. Refer to GP 4. Disconnect the power cord. Electricity can cause death or injury. Moving parts can cause injury.

Perform the steps that follow:

1. Remove any remaining paper from the FUSING ASSY, **the error persists,**
2. Replace the FUSING ASSY, REP 7.1.1

060-341 to 060-357, 061-362 to 061-393 LPH Fault RAP

060-341 LPH DATA Fail Y Large pixel count error between the video output and LPH. Image abnormality may occur.

060-342 LPH DATA Fail M Large pixel count error between the video output and LPH. Image abnormality may occur.

060-343 LPH DATA Fail C Large pixel count error between the video output and LPH. Image abnormality may occur.

060-344 LPH DATA Fail K Large pixel count error between the video output and LPH. Image abnormlity may occur.

060-349 LPH Reset Fail Y LPH reset due to a noise was detected. Possibly caused by an external noise.

060-350 LPH Reset Fail C LPH reset due to a noise was detected. Possibly caused by an external noise.

060-351 LPH Reset Fail M LPH reset due to a noise was detected. Possibly caused by an external noise.

060-352 LPH Reset Fail K LPH reset due to a noise was detected. Possibly caused by an external noise.

061-354 LPH DL Fail Y ASIC register error during IBY initial DL check.

061-355 LPH DL Fail C ASIC register error during IBY initial DL check.

061-356 LPH DL Fail M ASIC register error during IBY initial DL check.

061-357 LPH DL Fail K ASIC register error during IBY initial DL check.

061-362 Communication error between ESS and LPH (data read error from LPH). It may occur due to external noise, poor connection of FFC, poor power supply, etc.

061-363 Communication error between ESS and LPH (data read error from LPH). It may occur due to external noise, poor connection of FFC, poor power supply, etc.

061-364 Communication error between ESS and LPH (data read error from LPH). It may occur due to external noise, poor connection of FFC, poor power supply, etc.

061-365 Communication error between ESS and LPH (data read error from LPH). It may occur due to external noise, poor connection of FFC, poor power supply, etc.

061-366 Communication error between ESS and LPH (data read error to LPH). It may occur due to an external noise, poor connection of FFC, poor power supply, etc.

061-367 Communication error between ESS and LPH (data read error to LPH). It may occur due to an external noise, poor connection of FFC, poor power supply, etc.

061-368 Communication error between ESS and LPH (data read error to LPH). It may occur due to an external noise, poor connection of FFC, poor power supply, etc.

061-369 Communication error between ESS and LPH (data read error to LPH). It may occur due to an external noise, poor connection of FFC, poor power supply, etc.

061-370 Communication error between ESS and LPH (error in the communication IC or cable). It may occur due to an external noise, poor connection of FFC, poor power supply, etc.

061-371 Communication error between ESS and LPH (error in the communication IC or cable). It may occur due to an external noise, poor connection of FFC, poor power supply, etc.

061-372 Communication error between ESS and LPH (error in the communication IC or cable). It may occur due to an external noise, poor connection of FFC, poor power supply, etc.

061-373 Communication error between ESS and LPH (error in the communication IC or cable). It may occur due to an external noise, poor connection of FFC, poor power supply, etc.

061-390 Large pixel count error between the video output and LPH. Image abnormality may occur.

061-391 Large pixel count error between the video output and LPH. Image abnormality may occur.

061-392 Large pixel count error between the video output and LPH. Image abnormality may occur.

061-393 Large pixel count error between the video output and LPH. Image abnormality may occur.

Initial Actions

1. Switch the power off then on GP 4
2. Perform the following actions;

Procedure

WARNING

Switch off the electricity to the machine, GP 4. Disconnect the power cord from the customer supply while performing tasks that do not need electricity. Electricity can cause death or injury. Moving parts can cause injury.

1. Verify the connections between LPH P/J1360 and ESS Board P/J1362 where failure is occurring.
2. Check the connections and ribbon cable between the LPH P/J1361 and the ESS Board P/J1363.
3. If the fault persists, install new components as necessary:
   - LPH Color Head Assembly, REP 2.1.1
   - ESS Board, REP 18.1.5 (MFP)
   - LPH Xerographic CRUM FFC Kit, REP 2.1.99
   - Call Support for further instruction

061-358 to 061-361 LPH Config Fail RAP

061-358 LPH Config Fail Y Model number of installed LPH could be incorrect. Memory inside of LPH could be defective.

061-359 LPH Config Fail M Model number of installed LPH could be incorrect. Memory inside of LPH could be defective.

061-360 LPH Config Fail C Model number of installed LPH could be incorrect. Memory inside of LPH could be defective.

061-361 LPH Config Fail K Model number of installed LPH could be incorrect. Memory inside of LPH could be defective.

Procedure

1. Power the machine down then back up GP 4
2. Verify the correct LPH is installed for the pertinent Y,M,C,K error and install the correct LPH for the error.

062-277, 316, 399 DADF Fail RAP

062-277 Communications cannot be established between the ESS Board and the DADF ASSY.

062-316 Error detected from the motor driver of the DADF motor.

062-399 DADF-Cont I/O Cable Connection Fail Connection problem of DADF cable was detected.

Procedure

WARNING

Switch off the electricity to the machine, GP 4. Disconnect the power cord from the customer supply while performing tasks that do not need electricity. Electricity can cause death or injury. Moving parts can cause injury.

1. Switch the power off then on, GP 4.
2. Check the connections and wiring between the ESS Board P/J1371 and the DADF ASSY. P/J1377 for an open circuit, short circuit or poor contact,
3. Install new components as necessary:
   - DADF Assembly, REP 50.1.1,
   - ESS Board (MFP), REP 18.1.5

062-300 Platen Interlock Open RAP

062-300 Any of the faults that follow was detected:

- DADF Job was stopped by opening the platen cover.
- DADF was opened when the document was set in DADF.
- DADF was opened while feeding.

Procedure

WARNING

Switch off the electricity to the machine, GP 4. Disconnect the power cord from the customer supply while performing tasks that do not need electricity. Electricity can cause death or injury. Moving parts can cause injury.

Refer to the procedure that follows as necessary:

- GP 11 How to Check a Sensor.

Perform the steps that follow:

1. Perform the sensor test in GP 11,
2. Install a new IIT Assembly, REP 50.1.2,
3. Call Support for further instruction.

062-311, 313, 321, 360, 371, 380, 386, 389, 393, 396-398 IIT Fail RAP

062-311 Error detected in IISS software.

062-313 Unexecutable Scan command error.

062-321 Unexecutable Scan command error.

062-360 Carriage home position error is detected.

062-371 IIT failure Lamp error is detected.

062-380 Insufficient lamp brightness was detected when performing AGC.

062-386 During AOC (darkness adjustment), detected CCD output error.

062-389 Overrunning of CRG was detected.

062-393 CISASIC communication error is detected.

062-396 Connection problem of CIS flat cable was detected.

062-397 Connection problem of ESS Video cable was detected.

062-398 Connection problem of ESS I/O cable was detected.

Procedure

WARNING

Switch off the electricity to the machine, GP 4. Disconnect the power cord from the customer supply while performing tasks that do not need electricity. Electricity can cause death or injury. Moving parts can cause injury.

1. Switch the power off then on, GP 4,
2. Clean the scanner platen and the white stripe, GP 34,
3. Install a new IIT Assembly, REP 50.1.2,
4. Install a new DADF Assembly, REP 50.1.1,
5. Install a new ESS Board, REP 18.1.5.

062-314, 318, 322 Software Parameter Error RAP

062-314 Parameter Error Incorrect software command parameters (value is out of range, etc.).

062-318 IIT Scan Timing Fail Scan setting was not performed in time during Page Gap.

062-322 Parameter Error Incorrect software command parameters (value is out of range, etc.).

Procedure

1. Upgrade to the latest firmware version, GP 9.

062-342 CCD PWBA Configuration Fail RAP

062-342 Type of CCD board is wrong.

Procedure

WARNING

Switch off the electricity to the machine, GP 4. Disconnect the power cord from the customer supply while performing tasks that do not need electricity. Electricity can cause death or injury. Moving parts can cause injury.

1. Switch the power off then on, GP 4,
2. Upgrade to the latest firmware version GP 9,
3. Install a new IIT Assy, REP 50.1.2.

062-345 IIT EEPROM Fail RAP

062-345 Write failure to IEEPROM, or communication failure with EEPROM.

Procedure

WARNING

Switch off the electricity to the machine, GP 4. Disconnect the power cord from the customer supply while performing tasks that do not need electricity. Electricity can cause death or injury. Moving parts can cause injury.

1. Switch the power off then on, GP 4,
2. Verify the EMMC Board is seated in the socket on the ESS Board correctly,
3. Install a new ESS Board, REP 18.1.5.

062-362 X Hard Fail RAP

062-362 Hard modification of authentication device was detected.

Procedure

WARNING

Switch off the electricity to the machine, GP 4. Disconnect the power cord from the customer supply while performing tasks that do not need electricity. Electricity can cause death or injury. Moving parts can cause injury.

1. Switch the power off then on, GP 4
2. Install a new ESS Board, REP 18.1.5.

062-395 Trans Power Failure Detected RAP

062-395 Power failure on the Trans board was detected.

Procedure

No action required, for information only.

062-790 Recognition Fail RAP

062-790 The document being scanned is prohibited by law.

Procedure

Advise the customer to refer to the Legal Notices in the User Guide to check the types of document available for copying.

065-221 to 065-225 CIS Fail RAP

065-221 AGC process of CIS is not completed or settled.

065-222 AGC process of CIS is not completed or settled.

065-223 There is a possibility that connection problem of the CIS cable occurs.

065-224 Information on the CIS device cannot be read correctly.

065-225 CIS failure was detected.

Procedure

WARNING

Switch off the electricity to the machine, GP 4. Disconnect the power cord from the customer supply while performing tasks that do not need electricity. Electricity can cause death or injury. Moving parts can cause injury.

1. Switch the power off then on, GP 4.
2. Check the connections and wiring between the ESS Board P/J1371 and the DADF ASSY. P/J1377 for an open circuit, short circuit or poor contact.
3. Install new components as necessary:
   - DADF Assembly, REP 50.1.1
   - ESS Board (MFP), REP 18.1.5

071-101 and 077-117 Paper Jam RAP

071-101 Paper does not actuate the Tray1 Regi Sensor within the specified time after Tray1 feed start.

077-117 During feeding from Tray2, Regi Sensor is not turned on within specified time from Tray2 Path Sensor ON.

Initial Actions

- Check the condition of the paper in all trays. Refer to GP 26 Paper and Media Size Specifications
- Ensure that the Fuser is installed correctly.

POSSIBLE PARTS AFFECTED

REGI SENSOR [CHUTE ASSY REGI FEEDER] (PL 15.2 Item 1)

FEED CLUTCH [CLUTCH ASSY PH] (PL 15.2 Item 15)

MAIN MOTOR [DRIVE ASSY MAIN] (PL 3.1 Item 1)

FEED AND SEPARATOR ROLL KIT (PL 9.1 Item 98)

ACTUATOR REGI (PL 15.2 Item 11)

HARNESS ASSY SNR REGI/NO (PL 15.2 Item 18)

MCU BOARD (PL 18.1 Item 1)

HARNESS ASSY MCU-MOT-C (PL 18.4 Item 4)

Procedure

WARNING

Ensure that the electricity to the machine is switched off while performing tasks that do not need electricity. Refer to GP 4 . Disconnect the power cord. Electricity can cause death or injury. Moving parts can cause injury.

WARNING

Do not touch the Fuser while it is hot.

Refer to the procedures that follow as necessary:

- GP 10 How to Check a Motor.
- GP 11 How to Check a Sensor.

Perform the steps that follow:

1. Check for obstructions in the paper path and flip over the pap er in the tray.
2. Adjust the paper guides (length guide and width guide) of the Tray to the paper.
3. Verify the PAPER FEED ROLL and SEPARATOR ROLL, PL 9.1 Item 98, are installed correctly, not damaged or worn, and clean with a slightly dampened with water, lint-free cloth.
   - Install a new FEED AND SEPARATOR ROLL KIT PL 9.1 Item 98, REP 9.1.98.
4. Verfiy no damage, wear, or deformation of the REGISTRATION ACTUATOR PL 15.2 Item 11.
   - Install a new REGISTRATION ACTUATOR REP 15.2.11.
5. Enter dC330, code 071-103. Check the Regi Sensor Operation PL 15.2 Item 1.
   - Check the connection between the Regi Sensor and the MCU Board and verify P/J540 , P/J545 , and PJ546 are fully seated. (Refer to Figure 1).
   - Check the continuity between the Regi Sensor and the P/J545 Is each cable of P/J545<=>P/J546.
     a. Install a new HARNESS ASSY SNR REGI/NO PL 15.2 Item 18.
   - Check the continuity between the P/J545 and the MCU Board, verify each cable of P/J540<=>P/J545.
     a. Install a new HARNESS ASSY REGI-C PL 18.4 Item 10.
   - Check if the voltage between the MCU Board ground and the P/J540-7 pin is about +5 VDC.
     a. Check the connection at the LVPS Board and the MCU Board P/J284 and P/J280 are fully seated.
     b. Check the continuity between the LVPS Board and the MCU Board Is each cable of P/J284<=>P/J280.
     c. Check the voltage from the LVPS Board (+5 VDC). Voltage between the LVPS Board ground and the P/J284-5 pin should be about +5 VDC.
        i. Check the connections at LVPS Board and the MCU Board, P/J284 and P/J280 are fully seated.
        ii. Check continuity between the LVPS Board and the MCU Board verify each cable of P/J284<=>P/J280 is continuous.
           – Install a new LV MCU HARNESS ASSY PL 18.4 Item 5(MFP), PL 18.8 Item 5(SFP).
        iii. Check the voltage from the LVPS Board ground and the P/J284-5 pin is about +5 VDC.
     d. If the fault persists, install new components as necessary:
        – Regi Sensor [REGISTRATION FEEDER CHUTE ASSY] PL15.2/1, REP 15.2.1
        – MCU Board, REP 18.1.1 (MFP), REP 18.5.1(SFP)
6. Enter dC330, code 071-002. Check the Feed Clutch operation, PL 15.2 Item 15.
   - Check the connection between the Feed Clutch and the MCU Board and verify P/J540, P/J544, and P/J548 are fully seated. (Refer to Figure 2).
   - Turn off the power, take off the Feed Clutch, and check the wire wound resistance between both terminals. The resistance value should be approximately 240 ohms (20 degrees C).
     a. Install a new FEED CLUTCH PL 15.2 Item 15.
   - Close all interlock switchs. Voltage between the MCU Board ground and P/J540-5 pin should read approximately +24VDC.
     a. Check the connections at the LVPS Board and the MCU Board, verify P/J284 and P/J280 are fully seated.
     b. Check continuity between the LVPS Board and the MCU Board verify each cable of P/J280<=>P/J284 is continuous.
        – Install a new LV MCU HARNESS ASSY PL 18.4 Item 5.
   - Close all intelock switches and check the voltage from the LVPS Board (+24 VDC). Voltage between the LVPS Board ground and the P/J284-20 pin should be about +24 VDC.
   - If the fault persists, install new components as necessary:

– Registration Feeder Chute Assy PL 15.2 Item 1 REP 15.2.1

7. Enter dC330, code 071-061. Check the Main Motor rotation, PL 3.1 Item 1.
   - Abnormal motor rotation is observed.
   - Check the connection between the Main Motor and the MCU Board and verify P/J571 and P/J570 are fully seated. (Refer to Figure 3).
   - Test the continuity of each cable of P/J571<=>P/J570. Refer to Figure 3).
     a. Install a new HARNESS ASSY MCU-MOT-C PL 18.4 Item 4.
   - Check the connection between the Main Motor and the LVPS Board and verify P/J570 and P/J288 are fully seated. (Refer to Figure 3).
   - Test the continuity of each cable of P/J572<=>P/J288. (Refer to Figure 3).
     a. Install a new MOTOR HARNESS ASSY, PL 18.4 Item 3.
   - Close all interlock switchs. Voltage between the LVPS Board ground and the P/J288-1 pin should read approximately +24VDC.
     a. Check the connections at the LVPS Board and the MCU Board, verify P/J284 and P/J280 are fully seated.
     b. Check continuity between the LVPS Board and the MCU Board verify each cable of P/J284<=>P/J280 is continuous.
        – Install a new LV MCU HARNESS ASSY PL 18.4 Item 5.
   - Close all intelock switches and check the voltage from the LVPS Board (+24 VDC). Voltage between the LVPS Board ground and the P/J284-2 pin should be about +24 VDC.
   - If the fault persists, install new components as necessary:
     – MCU Board REP 18.1.1(MFP), REP 18.5.1(SFP)
     – Install a new LVPS Board REP 18.1.16 (MFP), REP 18.5.16 (SFP)

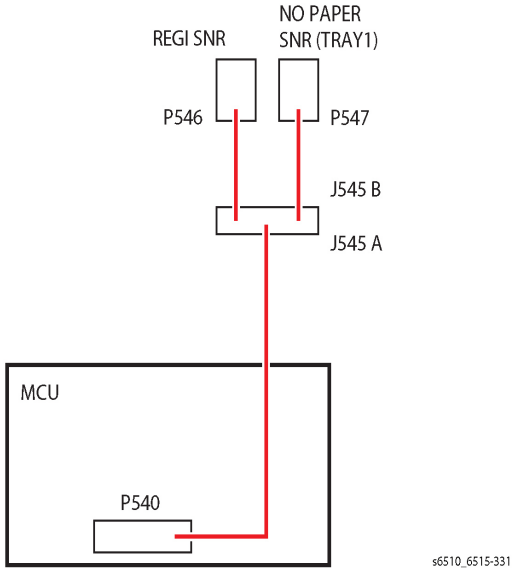

Figure 1

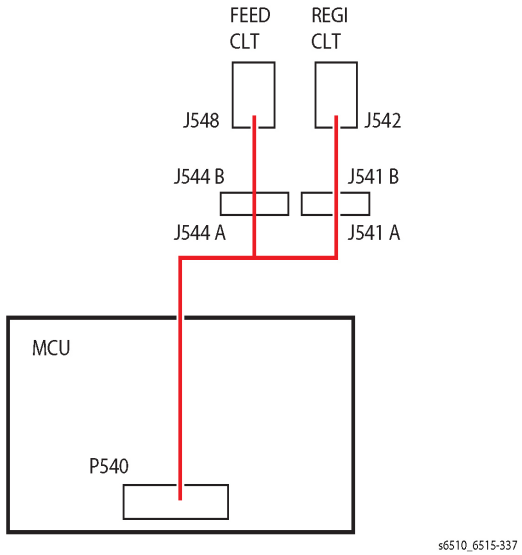

Figure 2

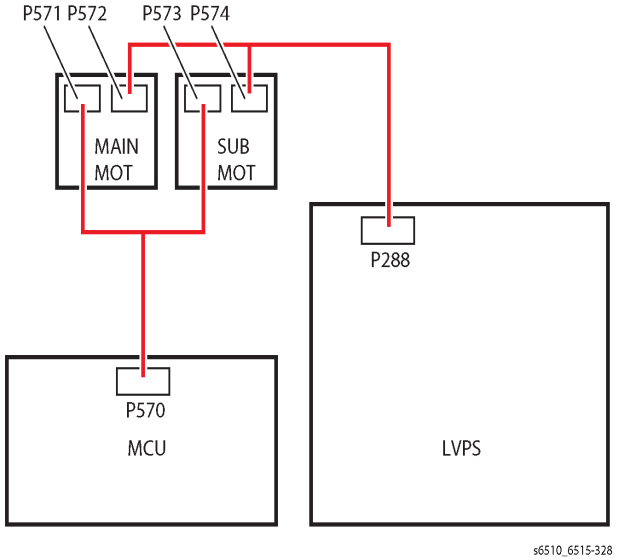

Figure 3

072-101 Jam in TRAYx RAP

072-101 Paper does not actuate the Tray2 Regi Sensor within the specified time after Tray2 feed start.

Initial Actions

- Check the condition of the paper in all trays. Refer to GP 26 Paper and Media Size Specifications
- **Possible Parts Affected**

  PATH SENSOR [FEEDER ASSY OPF 550] PL 10.2 Item 1FEED CLUTCH OPT [CLUTCH ASSY PH OPF 550] PL 10.2 Item 16OPT TAKEAWAY CLUTCH PL 10.2 Item 4OPF FDR MOTOR [MOTOR ASSY DRIVE OPF 550] PL 10.1 Item 8

  FEED AND SEPARATOR ROLL KIT PL 10.3 Item 98.

  PWB ASSY OPF 550 PL 10.1 Item 11HARNESS ASSY OPF PL 18.3 Item 6HARNESS ASSY OPF 2C PL 10.1 Item 17MCU BOARD PL 18.1 Item 1

Procedure

WARNING

Ensure that the electricity to the machine is switched off while performing tasks that do not need electricity. Refer to GP 4 . Disconnect the power cord. Electricity can cause death or injury. Moving parts can cause injury.

WARNING

Do not touch the Fuser while it is hot.

Refer to the procedures that follow as necessary:

- GP 10 How to Check a Motor.
- GP 11 How to Check a Sensor.

Perform the steps that follow:

1. Check for obstructions in the paper path and flip over the paper in the tray.
2. Adjust the paper guides (length guide and width guide) of the Tray to the paper.
3. Verify the PAPER FEED ROLL and SEPARATOR ROLL, PL 10.3 Item 98 are installed correctly, not damaged or worn, and clean with a slightly dampened with water, lint-free cloth.
   - Install a new FEED AND SEPARATOR ROLL KIT PL 10.3 Item 98, REP 10.3.98.
4. Enter dC330, code 071-113. Check the Path Sensor operation PL 10.2 Item 1.
   - Verify the connection between the Path Sensor and the ASSY OPF 550 Board PL 10.1 Item 11. and verify P/J808 and P/J810 are fully seated.
   - Verify the continuity between the Path Sensor and the ASSY OPF 550 Board PL 10.1 Item 11. Verify each cable of P/J545<=>P/J546 is continuous.
     a. Install a new TURN HARNESS ASSY.
   - Verify the voltage between the ASSY OPF 550 Board PL 10.1 Item 11 ground and the P/J808-3 pin is about +5 VDC.
     a. Install a new PHOTO SENSOR PL 10.2 Item 17.
   - Verify the voltage between the ASSY OPF 550 Board PL 10.1 Item 11 ground and the P/J808-9 pin is about +5 VDC..
     a. Install a new Kit Feeder Assy OPF 550 PL 10.1 Item 1 REP 10.1.1
     b. Verify the continuity between the LVPS Board and the MCU Board Is each cable of P/J284<=>P/J280.
        – Install a new LV MCU HARNESS ASSY PL 18.8 Item 5.
     c. Verify the voltage from the MCU Board ground and the P/J800-2 pin is about +5 VDC.
        i. Check the connections at LVPS Board and the MCU Board, P/J284 and P/J280 are fully seated.
        ii. Check continuity between the LVPS Board and the MCU Board verify each cable of P/J284<=>P/J280 is continuous.
           – Install a new LV MCU HARNESS ASSY PL 18.4 Item 5.
        iii. Check the voltage from the LVPS Board ground and the P/J284-5 pin is about +5 VDC.
   - Verify the connection between the PWB ASSY OPF 550 and the MCU Board and verify P/J800, P/J801, and P/J802 are fully seated. (Refer to Figure 1)
     a. If the fault persists, install new components as necessary:
        – MCU Board REP 18.1.1(MFP), REP 18.5.1(SFP)
        – Repair the HARNESS ASSY OPF 2C PL 10.1 Item 17.
5. Enter dC330, code 071-014. Check the Option 550 Feeder Clutch Assy operation, PL 10.2 Item 16.
   - Check the connection between the Feed Clutch OPT PL 10.2 Item 16 and the PWB ASSY OPF 550 PL 10.2 Item 11, and verify P/J805 and P/J806 are fully seated. (Refer to Figure 1).
   - Verify the continuity between the Feed Clutch OPT PL 10.2 Item 16 and the PWB ASSY OPF 550 PL 10.2 Item 11, and verify each cable of P/J805<=>P/J806 is continuous.
     a. Install a new FEED HARNESS ASSY.
   - Turn off the power, take off the Feed Clutch OPT. Verify the resistance between both terminals is approximately 240 ohms.
     a. Install a new Option 550 Feeder Clutch Assy PL 10.2/16.
   - Close all interlock switches and check the voltage from the PWB ASSY OPF 550 ground and the P/J805-2 pin should be about +24 VDC.
     a. Install a new Option 550 Feeder Clutch Assy PL 10.2 Item 16
   - Verify continuity between the LVPS Board and the MCU Board verify each cable of P/J284<=>P/J280 is continuous
     a. Install a new Kit Feeder Assy OPF 550 PL 10.1 Item 1 REP 10.1.1.
   - Close all interlock switches and check the voltage from the MCU Board ground and the P/J800-6,7,8 pin should be about +24 VDC.
     a. Verify the connections at LVPS Board and the MCU Board, P/J284 and P/J280 are fully seated.
     b. Verify continuity between the LVPS Board and the MCU Board verify each cable of P/J284<=>P/J280 is continuous.
        i. Install a new LV MCU HARNESS ASSY PL 18.4 Item 5.
     c. Close all intelock switches and verify the voltage from the LVPS Board ground and the P/J284-18 pin and the voltage from the LVPS Board ground and the P/J284-20 pin is about +24 VDC.
   - If the fault persists, install new components as necessary:

- MCU Board, REP 18.1.1(MFP), REP 18.5.1(SFP)
- LVPS Board, REP 18.1.16 (MFP), REP 18.5.16(SFP)

6. Enter dC330, code 071-015, Check the OPT Takeaway Clutch operation, PL 10.2 Item 4.
   - Check the connection between the OPT Takeaway Clutch, PL 10.2 Item 4 and the PWB ASSY OPF 550 PL 10.2 Item 11, and verify P/J808 and P/J809 are fully seated.
   - Verify the continuity between the OPT Takeaway Clutch, PL 10.2 Item 4 and the PWB ASSY OPF 550 PL 10.2 Item 11, and verify each cable of P/J808<=>P/J809 is continuous.
     a. Install a new TURN HARNESS ASSY.
   - Turn off the power, take off the OPT Takeaway Clutch. Verify the resistance between both terminals is approximately 240 ohms.
     a. Install a new OPT Takeaway Clutch, PL 10.2 Item 4.
   - Close all interlock switches and check the voltage from the PWB ASSY OPF 550 ground and the P/J808-2 pin should be about +24 VDC.
     a. Install a new OPT Takeaway Clutch, PL 10.2 Item 4.
   - Close all interlock switches and check the voltage from the PWB ASSY OPF 550 ground and the P/J802-3, 4, 5 pin should be about +24 VDC
     a. Install a new Kit Feeder Assy OPF 550 REP 10.1.1.
   - Close all interlock switches and check the voltage from the PWB ASSY OPF 550 ground and the P/J800-6, 7, 8 pin should be about +24 VDC
     a. Close all interlock switchs. Voltage between the LVPS Board ground and the P/J288-1 pin should read approximately +24VDC.
        i. Check the connections at the PWBA LVPS and the MCU Board, verify P/J284 and P/J280 are fully seated.
        ii. Check continuity between the PWBA LVPS and the MCU Board verify each cable of P/J284<=>P/J280 is continuous.
           - Install a new LV MCU HARNESS ASSY PL 18.4 Item 5.
        iii. Close all intelock switches and verify the voltage from the PWBA LVPS ground and the P/J284-18 pin and the voltage from the PWBA LVPS ground and the P/J284-20 pin is about +24 VDC.
   - Verify the connections at PWB ASSY OPF 550 and the MCU Board, P/J800, P/J801, and P/J802 are fully seated.
   - If the fault persists, install new components as necessary:
     a. MCU Board, REP 18.1.1(MFP), REP 18.5.1(SFP)
     b. Repair the HARNESS ASSY OPF 2C PL 10.1 Item 17.
7. Enter dC330, code 071-010. Check the Motor Assy Drive OPF 550 operation, PL 10.1 Item 18.
   - Rotate the OPF FDR MOTOR PL 10.1 Item 18 manually. Verify there is no resistance, overload, or indication of a problem.
     a. Reinstall the OFP FDR Motor PL 10.1 Item 18 back in the machine.
   - Check the connection between the OPF FDR MOTOR, PL 10.1 Item 18 and the PWB ASSY OPF 550 PL 10.2 Item 11, and verify MCU Board, P/J803 and P/J804 are fully seated.
   - Verify the continuity between the OPF FDR MOTOR, PL 10.1 Item 18 and the PWB ASSY OPF 550 PL 10.2 Item 11, and verify each cable of P/J803<=>P/J804 is continuous.
     a. Install a new HARNESS ASSY FDR MOT.
   - Close all interlock switches and check the voltage from the PWB ASSY OPF 550 ground and the P/J803-5pin should be about +24 VDC.
     a. Install a new OPF FDR MOTOR, PL 10.1 Item 18.
   - Close all interlock switches and check the voltage from the PWB ASSY OPF 550 ground and P/J802-3, 4, 5 pin should be about +24 VDC.
     a. Install a new PWB ASSY OPF 550 PL 10.2 Item 11 REP 10.1.1.
   - Close all interlock switches and check the voltage from the MCU Board ground and the P/J800-6,7,8 pin should be about +24 VDC.
     a. Verify the connections at LVPS Board and the MCU Board, P/J284 and P/J280 are fully seated.
     b. Verify continuity between the LVPS Board and the MCU Board verify each cable of P/J284<=>P/J280 is continuous.
        i. Install a new LV MCU HARNESS ASSY PL 18.4 Item 5.
     c. Close all intelock switches and verify the voltage from the LVPS Board ground and the P/J284-18 pin and the voltage from the LVPS Board ground and the P/J284-20 pin is about +24 VDC .
     a. Verify the connections at PWB ASSY OPF 550 and the MCU Board, P/J800, P/J801, and P/J802 are fully seated.
   - If the fault persists, install new components as necessary:
     a. MCU Board, REP 18.1.1(MFP), REP 18.5.1(SFP)
     b. Repair the HARNESS ASSY OPF 2C PL 10.1 Item 17 .

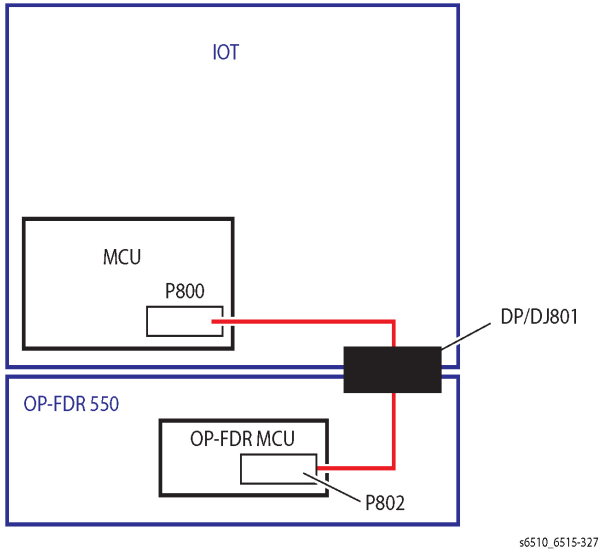

Figure 1

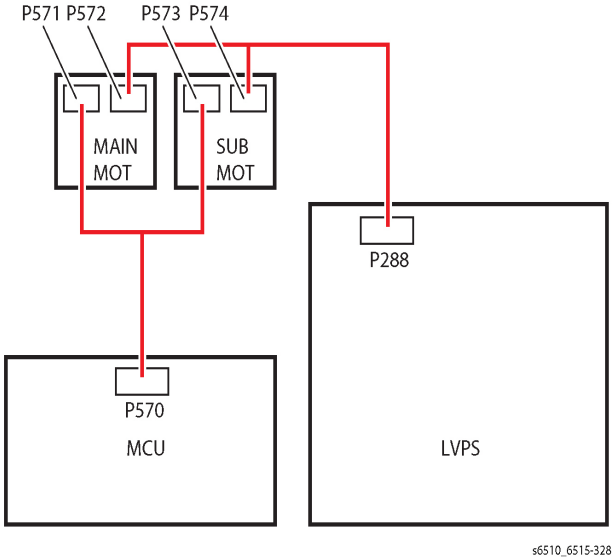

Figure 2

072-310 and 072-311 Tray2 Fail RAP

Feeder Motor Alarm on Tray2 is detected.

Operation mode of Tray2 (Download mode) is detected.

Procedure

WARNING

Switch off the electricity to the machine, GP 4. Disconnect the power cord from the customer supply while performing tasks that do not need electricity. Electricity can cause death or injury. Moving parts can cause injury.

Perform the steps that follow:

1. Check for obstructions in the paper path.
2. Turn the power off and back on, GP 4,
3. Reseat the Optional 550-Sheet Feeder PL 10.1 Item 1,
4. Update the Firmware, GP 9,
5. Install a new Optional 550-Sheet Feeder PL 10.1 Item 1.

075-100 JAM in Bypass Tray RAP

075-100 After MSI Feed Start, Regi Sensor is not turned on by paper within specified time.

Primary Causes

Bypass Tray Separator Holder Assembly PL 13.2 Item 5

MSI Feed Solenoid PL 13.1 Item 7

MCU Board PL 18.1 Item 1

Initial Actions

Verfiy and remove any papaer jam.

Procedure

WARNING

Ensure that the electricity to the machine is switched off while performing tasks that do not need electricity. Refer to GP 4 . Disconnect the power cord. Electricity can cause death or injury. Moving parts can cause injury.

Perform the steps that follow:

1. Verify no obstructions in the paper path.
2. Verify the condition of the Seperator Rolls PL 13.2 Item 5 looking for any unsusual wear or damage, **the error persists,**
3. Clean the Serperator Rolls with a slightly dampened with water lint-free cloth, **the error persists,**
4. Install a new Bypass Tray Separator Holder Assembly PL 13.2 Item 5 following REP 13.2.5 , **the error persists,**
5. Verify the MSI Feed Solenoid PL 13.1 Item 7
   - Enter dC330, code 072-001. Test the MSI Feed Solenoid function (FIP2.8).
     a. Check the connections to the MSI FEED SOLENOID PL 13.1 Item 7, and the MCU Board PL 18.1 Item 1, at P/J480 and P/J482 and verify they are fully seated (Refer to Figure 1).
     b. Check the continuity between the MSI FEED SOLENOID PL 13.1 Item 7, and the MCU Board PL 18.1 Item 1, verifying each cable of P/J480<=>P/J482 continuity.
     c. Close all interlock switchs. Voltage between the MCU Board ground and the P/J480-3 pin should read approximately +24VDC.
        i. Check the connections at the LVPS Board and the MCU Board, verify P/J284 and P/J280 are fully seated.
        ii. Check continuity between the LVPS Board and the MCU Board verify each cable of P/J284< =>P/J280 is continuous.
           – Install a new LV MCU HARNESS ASSY PL 18.4/5.
     d. Close all intelock switches and check the voltage from the LVPS Board (+24 VDC). Voltage between the LVPS Board ground and the P/J284-20 pin should be about +24 VDC.
     e. Install a new MSI FEED SOLENOID PL 13.1 Item 7, REP 13.1.1
     f. If the fault persists, install new components as necessary:
        – MCU Board, REP 18.1.1,(MFP), REP 18.5.1(SFP)

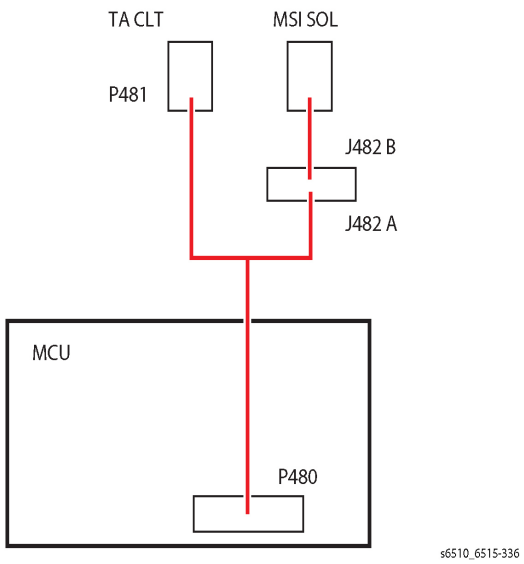

Figure 1

077-101 Paper Jam RAP

077-101 Regi Sensor Off Jam After Regi Clutch ON, Regi Sensor is not turned on by paper within specified time.

Initial Actions

- Check for and remove any jammed paper.
- Procede troubleshooting using the steps below.

Possible Parts Affected

Regi Sensor PL 15.2 Item 13

Exit Sensor (Part of the Fusing ASSY PL 7.1 Item 1

Regi Clutch Assy PL 15.1 Item 8

Sub Motor (Part af the Main Drive ASSY) PL 3.1 Item 1

Main Drive Assy PL 3.1 Item 1

Feed and Separator Roll Kit PL 9.1 Item 98

MCU Board PL 18.1 Item 1

LVPS Board PL 18.1/16

Procedure

WARNING

Ensure that the electricity to the machine is switched off while performing tasks that do not need electricity. Refer to GP 4 . Disconnect the power cord. Electricity can cause death or injury. Moving parts can cause injury.

Refer to the procedures that follow as necessary:

- GP 10 How to Check a Motor.
- GP 11 How to Check a Sensor.

Perform the steps that follow:

1. Verify there are no obstructions in the paper path and the paper guides are set correct to the paper size in the paper tray.
2. Verify the paper guides are set correct to the paper size.
3. Check the Paper Feed Roll and Separator Roll PL 1.1/98, for foreign substances or wear.
   a. Install a new FEED AND SEPARATOR ROLL KIT PL 9.1 Item 98, REP 9.1.98.
4. Enter dC330, code 071-103. Check the Regi Sensor Operation PL 15.2 Item 1.
   - Check the connection between the Regi Sensor and the MCU Board and verify P/J540 , P/J545 , and PJ546 are fully seated. (Refer to Figure 1).
   - Check the continuity between the Regi Sensor and the P/J545 Is each cable of P/J545<=>P/J546.
     a. Install a new HARNESS ASSY SNR REGI/NO PL 15.2 Item 18.
   - Check the continuity between the P/J545 and the MCU Board, verify each cable of P/J540<=>P/J545.
     a. Install a new HARNESS ASSY REGI-C PL 18.4 Item 10.
   - Check if the voltage between the MCU Board ground and the P/J540-7 pin is about +5 VDC.
     a. Check the connection at the LVPS Board and the MCU Board P/J284 and P/J280 are fully seated.
     b. Check the continuity between the LVPS Board and the MCU Board Is each cable of P/J284<=>P/J280.
     c. Check the voltage from the LVPS Board (+5 VDC). Voltage between the LVPS Board ground and the P/J284-5 pin should be about +5 VDC.
        i. Check the connections at LVPS Board and the MCU Board, P/J284 and P/J280 are fully seated.
        ii. Check continuity between the LVPS Board and the MCU Board verify each cable of P/J284<=>P/J280 is continuous.
           – Install a new LV MCU HARNESS ASSY PL 18.4 Item 5(MFP), PL 18.8 Item 5(SFP).
        iii. Check the voltage from the LVPS Board ground and the P/J284-5 pin is about +5 VDC.
     d. If the fault persists, install new components as necessary:
        – Regi Sensor [REGISTRATION FEEDER CHUTE ASSY] PL15.2/1, REP 15.2.1
        – MCU Board, REP 18.1.1 (MFP), REP 18.5.1(SFP)
5. Enter dC330, code 071-004. Check the Registration Clutch, PL 15.1 Item 8
   - Check the connection between the REGI CLUTCH and the MCU Board and verify P/J540, P/J541, and P/J542 are fully seated. (Refer to Figure 2).
   - Close all interlock switchs. Voltage between the LVPS Board ground and the P/J288-1 pin should read approximately +24VDC.
     a. Check the connections at the LVPS Board and the MCU Board, verify P/J284 and P/J280 are fully seated.
     b. Check continuity between the LVPS Board and the MCU Board verify each cable of P/J284 <=>P/J280 is continuous.
        – Install a new LV MCU HARNESS ASSY PL 18.4 Item 5(MFP) , PL 18.8 Item 5(SFP).
     c. Close all intelock switches and verify the voltage from the LVPS Board ground and the P/J284-18 pin and the voltage from the LVPS Board ground and the P/J284-20 pin is about +24 VDC.
     d. If the fault persists, install new components as necessary:
        – Registration Clutch, PL 15.1 Item 8.
        – MCU Board, REP 18.1.1(MFP), REP 18.5.1(SFP)
6. Enter dC330, code 071-065. Check the Sub Motor rotation for any abnormal, frozen, or resistive rotation , PL 3.1 Item 1.
   - Check the connection between the SUB MOTOR and the MCU Board and verify P/J573, and P/J570 are fully seated. (Refer to Figure 2).
   - Check continuity between the SUB MOTOR and the MCU Board verify each cable of P/J573<=>P/J570 is continuous.
     – Install a new MCU-MOT-C Harness Assy, PL 18.4 Item 4(MFP), PL 18.8 Item 4(SFP).
   - Check the connection between the SUB MOTOR and the LVPS Board and verify P/J574, and P/J288 are fully seated.
   - Check continuity between the SUB MOTOR and the LVPS Board verify each cable of P/J574<=>P/J288 is continuous.
     – Install a new MOTOR HARNESS ASSY PL 18.4 Item 3(MFP), (SFP).

- Close all interlock switchs. Voltage between the LVPS Board ground and the P/J288-1 pin should read approximately +24VDC.
  a. Check the connections at the LVPS Board and the MCU Board, verify P/J284 and P/J280 are fully seated.
  b. Check continuity between the LVPS Board and the MCU Board verify each cable of P/J284<=>P/J280 is continuous.
     – Install a new LV MCU HARNESS ASSY PL 18.8 Item 5(MFP), PL 18.4 Item 5(SFP).
  c. Close all intelock switches and verify the voltage from the LVPS Board ground and the P/J284-18 pin and the voltage from the LVPS Board ground and the P/J284-20 pin is about +24 VDC.
  d. If the fault persists, install new components as necessary:
     – Main Drive Assembly, PL 3.1 Item 1, .
     – MCU Board, REP 18.1.1(MFP), REP 18.5.1(SFP)

7. Enter dC330, code 071-104. Check the Exit Sensor operation, PL 7.1 Item 1
   - Check the connection between the EXIT SENSOR and the MCU Board and verify P/J270,and P/J272 are fully seated. Refer to Figure 2.
   - Check continuity between the EXIT SENSOR and the MCU Board verify each cable of P/J270<=>P/J272 is continuous.
     – Install a new DC AX HARNESS, PL 18.3 Item 2 (MFP), PL 18.7 Item 2(SFP).
   - Check the voltage from the LVPS Board (+5 VDC). Voltage between the LVPS Board ground and the [P/J284]-5 pin should be about +5 VDC.
     a. Check the connections at LVPS Board and the MCU Board, P/J284 and P/J280 are fully seated.
     b. Check continuity between the LVPS Board and the MCU Board verify each cable of P/J284<=>P/J280 is continuous.
        – Install a new LV MCU HARNESS ASSY PL 18.8 Item 5(MFP), PL 18.4 Item 5(SFP).
     c. Check the voltage from the LVPS Board ground and the P/J284-5 pin is about +5 VDC.
   - If the fault persists, install new components as necessary:
     – Exit Sensor (Fusing Assembly), PL 7.1 Item 1
     – MCU Board, REP 18.1.1(MFP), REP 18.5.1(SFP)

8. Enter dC330, code 071-061. Check the Main Motor rotation, PL 3.1 Item 1.
   - Abnormal motor rotation is observed.
   - Check the connection between the Main Motor and the MCU Board and verify P/J571 and P/J570 are fully seated. (Refer to Figure 3).
   - Test the continuity of each cable of P/J571<=>P/J570. Refer to Figure 3).
     a. Install a new HARNESS ASSY MCU-MOT-C PL 18.4 Item 4.
   - Check the connection between the Main Motor and the LVPS Board and verify P/J570 and P/J288 are fully seated. (Refer to Figure 3).
   - Test the continuity of each cable of P/J572<=>P/J288. (Refer to Figure 3).
     a. Install a new MOTOR HARNESS ASSY, PL 18.4 Item 3.
   - Close all interlock switchs. Voltage between the LVPS Board ground and the P/J288-1 pin should read approximately +24VDC.
     a. Check the connections at the LVPS Board and the MCU Board, verify P/J284 and P/J280 are fully seated.
     b. Check continuity between the LVPS Board and the MCU Board verify each cable of P/J284<=>P/J280 is continuous.
        – Install a new LV MCU HARNESS ASSY PL 18.4 Item 5.
- Close all intelock switches and check the voltage from the LVPS Board (+24 VDC). Voltage between the LVPS Board ground and the P/J284-2 pin should be about +24 VDC.
- If the fault persists, install new components as necessary:
  – MCU Board REP 18.1.1(MFP), REP 18.5.1(SFP)
  – Install a new LVPS Board REP 18.1.16 (MFP), REP 18.5.16 (SFP)

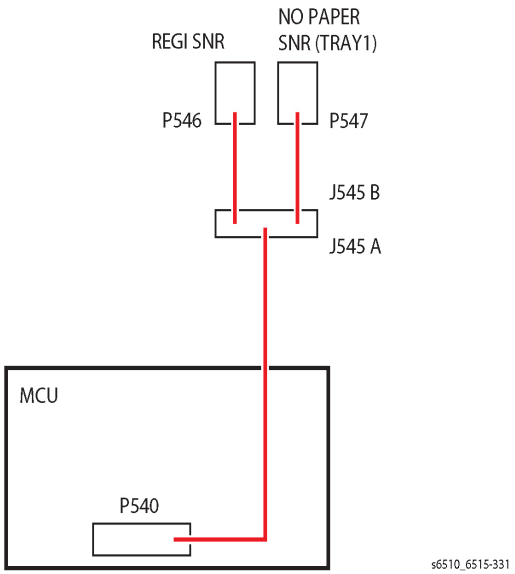

Figure 1

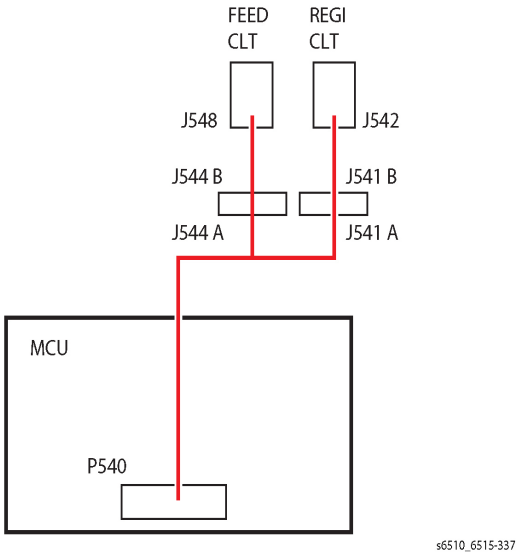

Figure 2

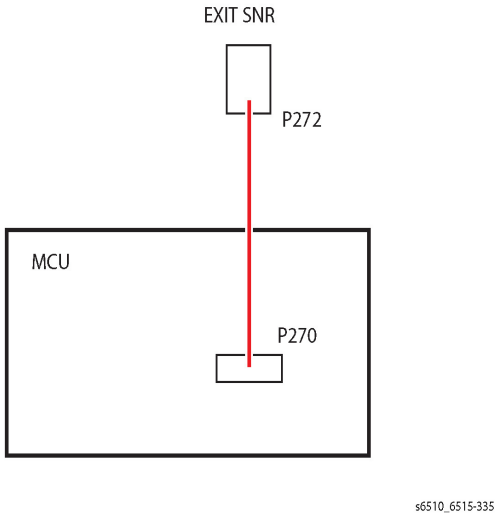

Figure 4

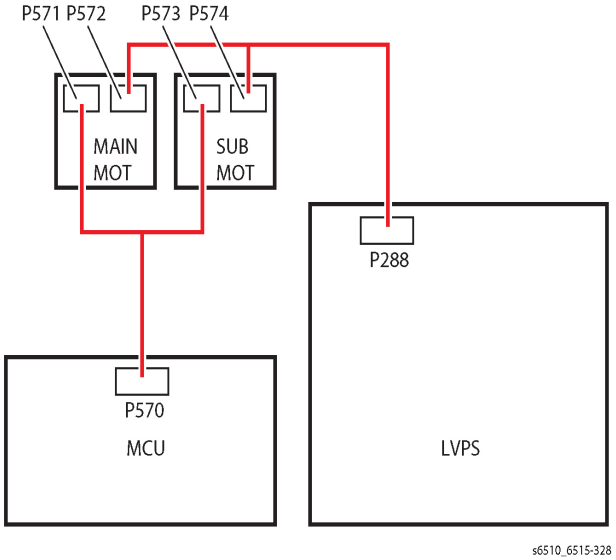

Figure 3

077-104 Exit Sensor Off Jam RAP

077-104 After Exit Sensor ON, Exit Sensor is not turned back off by the trail edge of the paper within the specified time..

Initial Actions

- Check the condition of the paper in all trays. Refer to GP 26 Paper and Media Size Specifications

Possible Parts Affected

Exit Sensor [FUSING ASSY] (PL 7.1 Item 1)

Exit Clutch (PL 17.1 Item 4)

Invert Clutch [EXIT MAIN DRIVE ASSY] (PL 17.1 Item 4)

Main Motor [MAIN DRIVE ASSY] (PL 3.1 Item 1)

Exit Roll [EXIT CHUTE ASSY] (PL 17.1 Item 1)

MCU Board (PL 18.1 Item 1)

WARNING

Ensure that the electricity to the machine is switched off while performing tasks that do not need electricity. Refer to GP 4 . Disconnect the power cord. Electricity can cause death or injury. Moving parts can cause injury.

WARNING

Do not touch the Fuser while it is hot.

Procedure

Refer to the procedures that follow as necessary:

- GP 10 How to Check a Motor.
- GP 11 How to Check a Sensor.

1. Check for obstructions in the paper path and clear all obstruction.
2. Check the Exit Roll for proper installation, foreign objects, or wear. Any excessive wear present,
   - Install a new Exit Chute ASSY REP 17.1.1
3. Enter dC330, code 071-104 to check Exit Sensor operation. Does the sensor function nomally?
   - Update to the latest firmware version.
   - Reseat the CONSOLE ASSY UI AIO PL 1.1 Item 1
   - Check the connections between the CONSOLE ASSY UI AIO PL 1.1/1 and the ESS Board PL 18.1 Item 5.
     - Verify P/J1352 fully seated.
   - Install a new UI CONSOLE ASSY (MFP) PL 1.1 Item 1, UI CONSOLE ASSY (SFP) PL 1.2 Item 1
   - Replace the FRONT USB HARNESS ASSY PL 18.1 Item 14
   - Install a new ESS Board PL 18.1 Item 5 (MFP, PL 18.5 Item 5 (SFP) REP 18.1.5,
4. Enter dC330, code 071-005. Check the Main Motor, PL 3.1 Item 1.
   - Check the connection between the Exit Clutch and the MCU Board verify P/J460, P/J462 is fully seated. Refer to Figure 1.
   - Close the interlock switch and check if the voltage between the MCU Board ground and the P/J460-4 pin is about +24VDC.
5. Enter dC330, code 071-006. Check the Invert Clutch operation, PL 17.1 Item 4.
   - Check the connection between the Invert Clutch and the MCU Board and verify P/J460, is fully seated.

     •Close interlock switch and check if the voltage between the MCU Board ground and the P/J460-2 pin is about +24VDC.

     a. Install a new MAIN DRIVE ASSY, PL 3.1 Item 1
6. Enter dC330, code 071-061. Check the Main Motor rotation, PL 3.1 Item 1.
   - Abnormal motor rotation is observed.
   - Check the connection between the Main Motor and the MCU Board and verify P/J571 and P/J570 are fully seated. (Refer to Figure 3).
   - Test the continuity of each cable of P/J571<=>P/J570. Refer to Figure 3).

     a. Install a new HARNESS ASSY MCU-MOT-C PL 18.4.4.
   - Check the connection between the Main Motor and the LVPS Board and verify P/J570 and P/J288 are fully seated. (Refer to Figure 3).
   - Test the continuity of each cable of P/J572<=>P/J288. (Refer to Figure 3).

     a. Install a new MOTOR HARNESS ASSY, PL 18.4 Item 3.
   - Close all interlock switchs. Voltage between the LVPS Board ground and the P/J288-1 pin should read approximately +24VDC.

     a. Check the connections at the LVPS Board and the MCU Board, verify P/J284 and P/J280 are fully seated.

     b. Check continuity between the LVPS Board and the MCU Board verify each cable of P/J284<=>P/J280 is continuous.

        – Install a new LV MCU HARNESS ASSY PL 18.4 Item 5.
   - Close all intelock switches and check the voltage from the LVPS Board (+24 VDC). Voltage between the LVPS Board ground and the P/J284-2 pin should be about +24 VDC.
   - If the fault persists, install new components as necessary:

     – Install a new LVPS Board REP 18.1.16 (MFP), REP 18.5.16 (SFP)
7. If the fault persists, install new components as necessary:
   - MCU Board, REP 18.1.1(MFP), REP 18.5.1(SFP).
   - ESS Board PL 18.1 Item 5 (MFP, PL 18.5 Item 5 (SFP) REP 18.1.5,

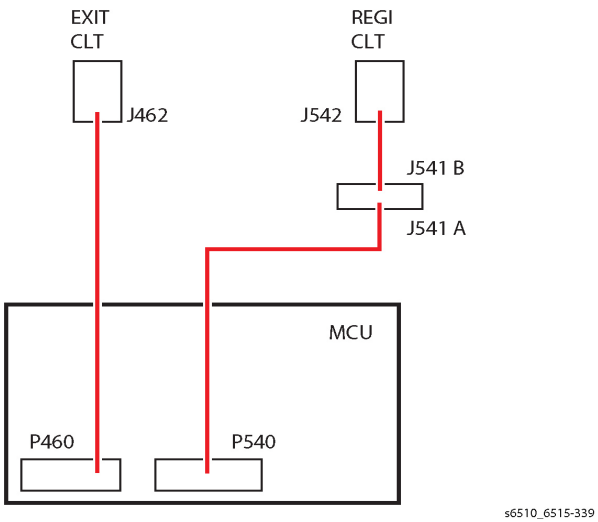

Figure 1

077-123 Registration Sensor Jam (Duplex) RAP

Paper does not actuate the Registration Sensor in the specified time after the registration clutch in energized in duplex mode.

Initial Actions

Check the condition of the paper in all trays. Refer to GP 26 Paper and Media Size Specifications.

Procedure

WARNING

Switch off the electricity to the machine, GP 4. Disconnect the power cord from the customer supply while performing tasks that do not need electricity. Electricity can cause death or injury. Moving parts can cause injury.

Refer to the procedures that follow as necessary:

- GP 10 How to Check a Motor.
- GP 11 How to Check a Sensor.
- GP 12 How to Check a Solenoid or Clutch.

Perform the steps that follow:

1. Check for obstructions in the paper path.
2. Check the Exit Roll, PL 17.1 Item 1 for foreign substances or wear. Clean or install new components as necessary.
3. Check the Duplex Rolls, PL 15.1 Item 14 and Pinch Rolls, PL 17.1 Item 2 for foreign substances or wear. Clean or install new components as necessary.
4. Enter dC330, code 071-104. Check the Exit Sensor operation, PL 7.1 Item 1
   - Check the connection between the EXIT SENSOR and the MCU Board and verify P/J270, and P/J272 are fully seated. (Refer to Figure 2).
   - Check continuity between the EXIT SENSOR and the MCU Board verify each cable of P/J270<=>P/J272 is continuous.
     – Install a new DC AX HARNESS, PL 18.3 Item 2 (MFP), PL 18.7 Item 2 (SFP).
   - Check the voltage from the LVPS Board (+5 VDC). Voltage between the LVPS Board ground and the P/J284-5 pin should be about +5 VDC.
     a. Check the connections at LVPS Board and the MCU Board, P/J284 and P/J280 are fully seated.
     b. Check continuity between the LVPS Board and the MCU Board verify each cable of P/J284<=>P/J280 is continuous.
        – Install a new LV MCU HARNESS ASSY PL 18.8 Item 5 (MFP), PL 18.4 Item 5 (SFP).
     c. Check the voltage from the LVPS Board ground and the P/J284-5 pin is about +5 VDC.
   - If the fault persists, install new components as necessary:
     – Exit Sensor (Fusing Assembly), PL 7.1 Item 1
5. Enter dC330, code 071-005. Check the Duplex Clutch.
6. Enter dC330, code 042-001. Check the Main Motor, PL 3.1 Item 1.
7. Enter dC330, code 071-061. Check the Main Motor rotation, PL 3.1 Item 1.

- Abnormal motor rotation is observed.
- Check the connection between the Main Motor and the MCU Board and verify P/J571 and P/J570 are fully seated. (Refer to Figure 3).
- Test the continuity of each cable of P/J571<=>P/J570. Refer to Figure 3).
  a. Install a new HARNESS ASSY MCU-MOT-C PL 18.4 Item 4.
- Check the connection between the Main Motor and the LVPS Board and verify P/J570 and P/J288 are fully seated. (Refer to Figure 3).
- Test the continuity of each cable of P/J572<=>P/J288. (Refer to Figure 3).
  a. Install a new MOTOR HARNESS ASSY, PL 18.4 Item 3.
- Close all interlock switchs. Voltage between the LVPS Board ground and the P/J288-1 pin should read approximately +24VDC.
  a. Check the connections at the LVPS Board and the MCU Board, verify P/J284 and P/J280 are fully seated.
  b. Check continuity between the LVPS Board and the MCU Board verify each cable of P/J284<=>P/J280 is continuous.
     – Install a new LV MCU HARNESS ASSY PL 18.4 Item 5.
- Close all intelock switches and check the voltage from the LVPS Board (+24 VDC). Voltage between the LVPS Board ground and the P/J284-2 pin should be about +24 VDC.
- If the fault persists, install new components as necessary:
  – MCU Board REP 18.1.1(MFP), REP 18.5.1(SFP)
  – Install a new LVPS Board REP 18.1.16 (MFP), REP 18.5.16 (SFP)

077-302 Device Right Side Door is Open RAP

Device Right-Side Door is Open.

Close the right-side door.

077-314 P/H Module Logic Fail RAP

Fatal error of paper feed module is detected.

Procedure

WARNING

Switch off the electricity to the machine, GP 4. Disconnect the power cord from the customer supply while performing tasks that do not need electricity. Electricity can cause death or injury. Moving parts can cause injury.

Perform the steps that follow:

1. Switch off, then switch on the machine, GP 4.
2. Replace the MCU Board REP 18.1.1 (MFP), REP 18.1.5 (SFP).

077-322 Option Comm Fail RAP

Communication failure between IOT and Option Tray is detected.

Procedure

WARNING

Switch off the electricity to the machine, GP 4. Disconnect the power cord from the customer supply while performing tasks that do not need electricity. Electricity can cause death or injury. Moving parts can cause injury.

Perform the steps that follow:

1. Reseat the Optional 550- Sheet Feeder.
2. Switch off, then switch on the machine, GP 4
3. If the fault persists, install new components as necessary:
   - Replace the Optional 550-Sheet Feeder, PL 10.2 Item 1.
   - Replace the HARNESS ASSY OPF, PL 18.3 Item 6.
   - Replace the HARNESS ASSY OPF 2C, PL 10.1 Item 17
   - MCU Board REP 18.1.1 (MFP), REP 18.1.5 (SFP).

077-323 PH Motor Fail RAP

Abnormal rotation in the PH Motor.

Procedure

WARNING

Switch off the electricity to the machine, GP 4. Disconnect the power cord from the customer supply while performing tasks that do not need electricity. Electricity can cause death or injury. Moving parts can cause injury.

Perform the steps that follow:

1. Switch off, then switch on the machine, GP 4.
2. The error persists, install a new Paper Handling (PH) Drive Assembly REP 3.1.2.

077-327 Feeder Composition Fail RAP

Option Unit structuring error (Invalid tray is installed)

Procedure

WARNING

Switch off the electricity to the machine, GP 4. Disconnect the power cord from the customer supply while performing tasks that do not need electricity. Electricity can cause death or injury. Moving parts can cause injury.

Perform the steps that follow:

1. Switch off, then switch on the machine, GP 4.
2. Remove the Optional Feeder 550 Tray.
3. The error persists, Check operation of the Exit, Regi, Tray2 Path Sensor.

077-909 Paper Jam RAP

Paper remains on Regi Sensor, Exit Sensor, Tray2 Path Sensor when power ON, machine stop (CycleDown/ShutDown), and Option Tray Cassette or Rear Cover or Side Cover is closed.

Procedure

Perform the steps that follow:

1. Remove all paper from the paper path.
2. Verify operation of the Exit, Regi, Tray2 Path Sensor.

089-600 to 089-617 RC Fail RAP

089-600 Main scanning correction failure: Main scanning position of #4(Black) color which is a standard is abnormal during A1/C Patch detection.

(Only to register on History)

089-601 RAD sensor detection failure or A1/C Patch forming failure: Valid sample block count is less than specified count when RAD Sensor IN during A1/C Patch detection.

(Only to register on History)

089-603 RAD sensor detection failure or A1/C Patch forming failure: Valid sample block count is less than specified count when RAD Sensor OUT during A1/C Patch detection.

(Only to register on History)

089-604 RAD sensor detection failure or B Patch forming failure: Valid sample block count is less than specified count when RAD Sensor IN during B Patch detection of #1(Yellow) color.

(Only to register on History)

089-606 RAD sensor detection failure or B Patch forming failure: Valid sample block count is less than specified count when RAD Sensor OUT during B Patch detection of #1(Yellow) color.

(Only to register on History)

089-607 RAD sensor detection failure or B Patch forming failure: Valid sample block count is less than specified count when RAD Sensor IN during B Patch detection of #2(Magenta) color.

(Only to register on History)

089-609 RAD sensor detection failure or B Patch forming failure: Valid sample block count is less than specified count when RAD Sensor OUT during B Patch detection of #2(Magenta) color.

(Only to register on History)

089-610 RAD sensor detection failure or B Patch forming failure : Valid sample block count is less than specified count when RAD Sensor IN during B Patch detection of #3(Cyan) color.

(Only to register on History)

089-612 RAD sensor detection failure or B Patch forming failure : Valid sample block count is less than specified count when RAD Sensor OUT during B Patch detection of #3(Cyan) color.

(Only to register on History)

089-613 RAD sensor detection failure or B Patch forming failure : Valid sample block count is less than specified count when RAD Sensor IN during B Patch detection of #4(Black) color.

(Only to register on History)

089-615 RAD sensor detection failure or B Patch forming failure: Valid sample block count is less than specified count when RAD Sensor OUT during B Patch detection of #4(Black) color.

(Only to register on History)

089-616 Correction setting value of calculation result exceeded valid setting range (To be introduced in V2? (Only to register on History)

089-617 After adding offset value to correction value, the valie exceeded valid setting range (To be introduced in V2? (Only to register on History)

Procedure

WARNING

When cleaning this product, use the designated cleaning materials exclusive to it. Other cleaning materials may result in poor performance of the product. Never use aerosol cleaners to avoid catching fire and explosion.

WARNING

Ensure that the electricity to the machine is switched off while performing tasks that do not need electricity. Refer to GP 4. Disconnect the power cord. Electricity can cause death or injury. Moving parts can cause injury

Clean the CTD (RAD) Sensor:

1. Turn the printer off, GP 4
2. Pull up the handle lever of the rear cover, and open the rear cover.
3. Clean the CTD sensor with a clean and dry cotton swab.

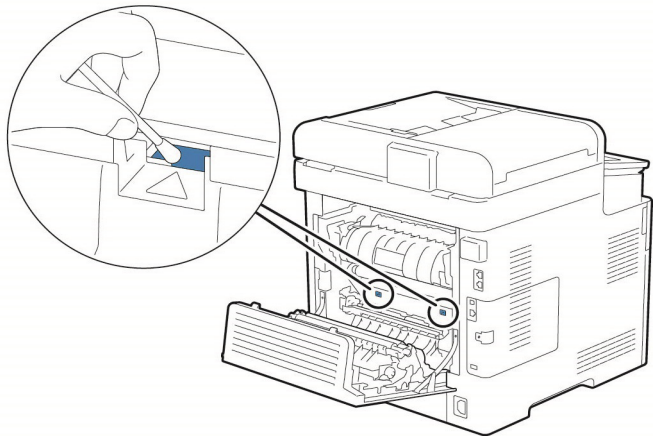

4. Close the rear cover.

089-623 to 089-679 LED Offset Correction Error RAP

089-623 During LED light amount correction of gain correction, sensor output voltage value on the IBT belt is abnormal (IN side) (Only to register on History)

089-629 During LED light amount correction of gain correction, sensor output voltage value on the IBT belt is abnormal (OUT side) (Only to register on History)

089-674 During LED light amount correction of gain correction, LED light amount is not converged (IN side) (Only to register on History)

089-676 During LED light amount correction of gain correction, LED light amount is not converged (OUT side) (Only to register on History)

089-677 During LED light amount correction of gain correction, sensor output voltage value on the IBT belt is abnormal (IN side) (Only to register on History)

089-679 During LED light amount correction of gain correction, sensor output voltage value on the IBT belt is abnormal (OUT side) (Only to register on History)

Procedure

WARNING

When cleaning this product, use the designated cleaning materials exclusive to it. Other cleaning materials may result in poor performance of the product. Never use aerosol cleaners to avoid catching fire and explosion.

WARNING

Ensure that the electricity to the machine is switched off while performing tasks that do not need electricity. Refer to GP 4. Disconnect the power cord. Electricity can cause death or injury. Moving parts can cause injury

Clean the CTD (RAD) Sensor:

1. Turn the printer off, GP 4
2. Pull up the handle lever of the rear cover, and open the rear cover.
3. Clean the CTD sensor with a clean and dry cotton swab.

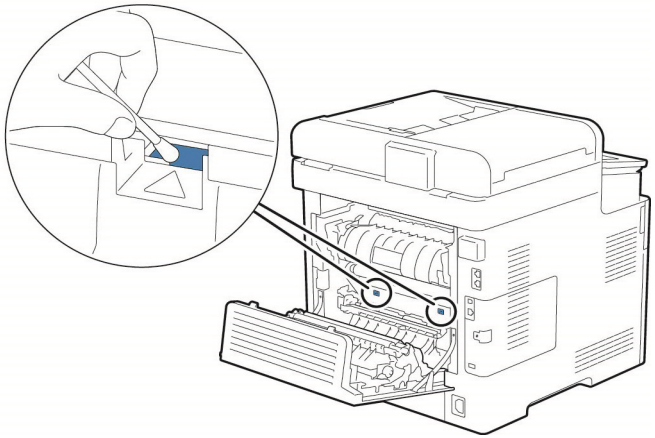

4. Close the rear cover.
5. Enter dC131, check the NVM values that follow:
   a. 759-009 (Lead Registration Offset).
   b. 759-011 (Side 1 Registration Offset).
   c. 759-012 (Side 2 Registration Offset).
6. Check connection of the Color Toner Density (CTD) Sensor Assembly, PL 6.1 Item 8.
7. Install a new Color Toner Density (CTD) Sensor Assembly, REP 6.1.8.
8. Install a new Transfer Belt Unit, REP 6.1.1.

091-300 Rear Cover Open RAP

091-300 Rear Cover Open is detected.

Initial Actions

Close the Rear Cover.

Procedure

WARNING

Ensure that the electricity to the machine is switched off while performing tasks that do not need electricity. Refer to GP 4. Disconnect the power cord. Electricity can cause death or injury. Moving parts can cause injury.

Perform the steps that follow:

1. Enter dC330, code 041-301. Check the Rear Interlock Switch operation PL 18.3 Item 4.
   a. If the fault persists, install new components as necessary:
      - MCU Board REP 18.1.1(MFP), REP 18.5.1(SFP)
   b. Check the connection of the Rear Interlock Switch and the PWBA LVPS. Verify P/J292 is fully seated. Refer to Figure 1.
   c. Check the connection of the PWBA LVPS and the MCU Board at P/J284 and P/J280 verify connections are fully seated and continuity of the cables between P/J284 <=>P/J280.
      i. Install a new LV MCU HARNESS ASSY PL 18.4 Item 5.
   d. Install a new Rear Interlock Switch, PL 18.3 Item 4, REP 18.3.4(MFP), PL 18.7 Item 4, REP 18.7.4(SFP)
      i. Install a new LVPS Board REP 18.1.16(MFP), REP 18.5.16(SFP).

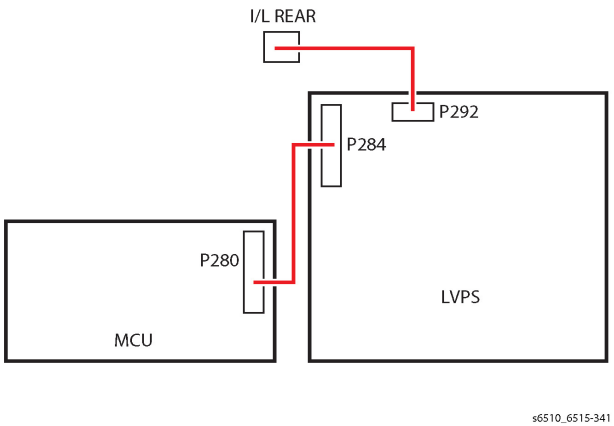

Figure 1

091-312 HVPS CC Fail RAP

091-312: HVPS CC Fail

Procedure

WARNING

Ensure that the electricity to the machine is switched off while performing tasks that do not need electricity. Refer to GP 4. Disconnect the power cord. Electricity can cause death or injury. Moving parts can cause injury.

Perform the steps that follow:

1. Power down the power up the machine, GP 4.
2. Check the connection between the PWBA HVPS and the MCU Board, verify P/J100 and P/J1001 are fully seated. Refer to Figure 1.
3. Check the continuity of the harness between P/J100 and P/J1001.
   a. Install a new MCU-HVPS-C HARNESS ASSY
4. Install a new HVPS Board A (SCC) REP 18.2.1(MFP), REP 18.6.1(SFP)
5. If the fault persists, install a new MCU Board REP 18.1.1(MFP), REP 18.5.1(SFP)

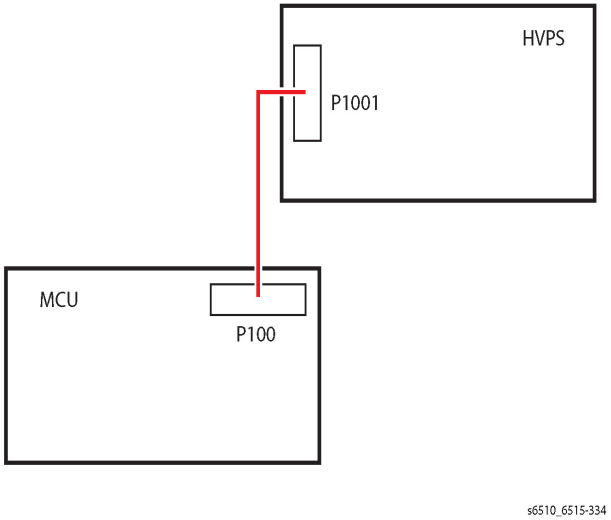

Figure 1

091-313, 402, 480-482, 913-929 Drum/CRUM RAP

091-313: CRUM ASIC Comm Fail
091-402: DRUM CARTRIDGE K Life Over
091-480: DRUM CARTRIDGE Y Life Over
091-481: DRUM CARTRIDGE M Life Over
091-482: DRUM CARTRIDGE C Life Over
091-913: DRUM CARTRIDGE K Life End
091-914: DRUM K CRUM Communication Fail
091-915: DRUM CRUM K Data Broken
091-916: DRUM CRUM K Data Mismatch
091-917: DRUM Y CRUM Communication Fail
091-918: DRUM M CRUM Communication Fail
091-919: DRUM C CRUM Communication Fail
091-920: DRUM CRUM Y Data Broken
091-921: DRUM CRUM K Not Position
091-922: DRUM CRUM M Data Broken
091-923: DRUM CRUM C Data Broken
091-924: DRUM CRUM Y Data Mismatch
091-925: DRUM CRUM M Data Mismatch
091-926: DRUM CRUM C Data Mismatch
091-927: DRUM CRUM Y Not Position
091-928: DRUM CRUM M Not Position
091-929: DRUM CRUM C Not Position

Initial Actions

1. Reseat the DRUM CARTRIDGE (YMCK): 091-313/ 091-914/ 091-917/ 091-918/ 091-919/ 090-921/ 090-927/ 090-928/ 090-929 / 024-933/ 024-940/ 024-941/ 091-402/ 091-480/ 091-481/ 091-482/ 091-913/ 091-915/ 091-916/ 091-920/ 091-922/ 091-923/ 091-924/ 091-925/ 091-926
2. Perform the steps in order below.

WARNING

Ensure that the electricity to the machine is switched off while performing tasks that do not need electricity. Refer to GP 4. Disconnect the power cord. Electricity can cause death or injury. Moving parts can cause injury.

Procedure

Perform the steps that follow:

1. Switch off then switch on the machine, GP 4.
2. Remove, then reinstall the DRUM cartridge.
3. Verify the connection terminal of the CRUM inside the XERO DEVE CRU ASSY (YMCK) PL 8.1 Item 1/2/3/4 broken for damage.
   a. Install a new XERO DEVE CRU ASSY (YMCK) PL 8.1 Item 1, REP 8.1.1.
4. Verify the DRUM cartridge CRUM connection between P/J400 and P/J401, P/J402, P/J403, P/J404 for damage and continuity in the Harness Assy Deve/Xero C PL 2.1 Item 9.
   a. Install a new Harness Assy Deve/Xero C PL 2.1 Item 9.
5. Verify connection and continuity between the Harness Assy Deve/Xero C PL 2.1 Item 9 and the MCU Board at P/J400, P/J401, P/J402, P/J403, P/J404.
6. If the fault persists, install new components as necessary:
   a. MCU Board, REP 18.1.1(MFP), REP 18.5.1(SFP).
   b. Harness Assy Deve/Xero C PL 2.1 Item 9.

091-400, 401, 405-436 DRUM/CRUM and Waste DRUM RAP

091-400 To inform users to replace the Waster Toner Box.

091-401 Detected that replacement of the DRUM CARTRIDGE(K) is required.

091-405 To inform users to replace the Waster Toner Box.

091-406 Detected that replacement period of the DRUM CARTRIDGE(K) is close.

091-411 Detected that replacement period of the DRUM CARTRIDGE(Y) is close.

091-416 Detected that replacement period of the DRUM CARTRIDGE(Y) is close.

091-421 Detected that replacement period of the DRUM CARTRIDGE(M) is close.

091-426 Detected that replacement period of the DRUM CARTRIDGE(M) is close.

091-431 Detected that replacement period of the DRUM CARTRIDGE(C) is close.

091-436 Detected that replacement period of the DRUM CARTRIDGE(C) is close.

Procedure

091-400 and 091-405 Have the customer prepare a new Waste Toner Box for replacement.

Have the customer prepare a new DRUM Cartridge (K,Y,M,C) for the same type DRUM cartridge notification.

091-911 Waste DRUM Bottle Full RAP

091-911 PV or Pixel Count exceeded the specified value after Waste DRUM Full Sensor is turned on.

Procedure

Perform the steps that follow:

1. Switch off then switch on the machine, GP 4.
2. Replace the Waste Toner Box with a new Waste Toner Box.
3. Execute the diagnosis dC330 [094-202], and check the TONER FULL SENSOR PL 5.1 Item 9 operation.
4. Verify the connection at the TONER FULL SENSOR PL 5.1 Item 9 and the MCU Board PL 18.1 Item 1 are fully seated.
5. Verify the voltage between the MCU Board ground and P/J480PIN-10 +5 VDC.
   a. Check if the voltage between the MCU Board ground and the P/J540PIN-7 is about +5 VDC.
      i. Check the connection at the PWBA LVPS and the MCU Board P/J284 and P/J280 are fully seated.
      ii. Check the continuity between the PWBA LVPS and the MCU Board Is each cable of P/J284 <=>P/J280.
         - Install a new LV MCU HARNESS ASSY PL 18.8 Item 5.
      iii. Check the voltage from the PWBA LVPS (+5 VDC). Voltage between the PWBA LVPS ground and the P/J284PIN-5 should be about +5 VDC.
      iv. Check the connections at PWBA LVPS and the MCU Board, P/J284 and P/J280 are fully seated.
      v. Check continuity between the PWBA LVPS and the MCU Board verify each cable of P/J284 <=>P/J280 is continuous.
         - Install a new LV MCU HARNESS ASSY PL 18.4 Item 5.
      vi. Check the voltage from the PWBA LVPS ground and the P/J284PIN-5 pin is about +5 VDC.
      vii. If the fault persists, install new components as necessary:
         - TONER FULL SENSOR REP 5.1.9
         - MCU Board, REP 18.1.1(MFP), REP 18.5.1(SFP)

092-312 to 315 ATC Sensor Fault RAP

092-312 ATC Y System Fail DRUM density in the developer unit as detected by the ATC sensor abnormal. This fault occurs when the difference between the maximum and minimum values in the ATC sensor measurement set is lower than the threshold value.

092-313 ATC M System Fail DRUM density in the developer unit as detected by the ATC sensor abnormal. This fault occurs when the difference between the maximum and minimum values in the ATC sensor measurement set is lower than the threshold value.

092-314 ATC C System Fail DRUM density in the developer unit as detected by the ATC sensor abnormal. This fault occurs when the difference between the maximum and minimum values in the ATC sensor measurement set is lower than the threshold value.

092-315 ATC K System Fail DRUM density in the developer unit as detected by the ATC sensor abnormal. This fault occurs when the difference between the maximum and minimum values in the ATC sensor measurement set is lower than the threshold value.

Procedure

Perform the steps that follow:

1. Switch off then switch on the machine, GP 4.
2. Contact 2nd Level Support.

   NOTE: *This error will not occur in the field and by any chance it happens, it is caused by a machine setting failure before shipping. Contact 2nd Level Support.*

092-916 Environment SNR Sensor Fail RAP

092-916 The Environment Sensor detects the temperature abnormally.

WARNING

Ensure that the electricity to the machine is switched off while performing tasks that do not need electricity. Refer to GP 4. Disconnect the power cord. Electricity can cause death or injury. Moving parts can cause injury.

Procedure

Perform the steps that follow:

1. Switch off then switch on the machine, GP 4.
2. Install a new Color Toner Density (CTD) Sensor Assembly REP 6.1.8.

092-318 to 321 ADC Patch System Fail RAP

092-318 ADC Y Patch System Fail

1. Detected (TC/SAD patch abnormal - pale color) Measurement result of potential/density patchshows abnormally pale color. DRUM cartridge became empty (DRUM recovery does not work), although DRUM cartridge is not supposed to be empty.
2. DRUM Cartridge Shane mode DRUM cartridge became empty (DRUM recovery does not work), although DRUM cartridge is not supposed to be empty.

092-319 ADC M Patch System Fail

1. Detected (TC/SAD patch abnormal - pale color) Measurement result of potential/density patch shows abnormally pale color. DRUM cartridge became empty (DRUM recovery does not work), although DRUM cartridge is not supposed to be empty.
2. DRUM Cartridge Shane mode DRUM cartridge became empty (DRUM recovery does not work), although DRUM cartridge is not supposed to be empty.

092-320 ADC C Patch System Fail

1. Detected (TC/SAD patch abnormal - pale color) Measurement result of potential/density patch shows abnormally pale color. DRUM cartridge became empty (DRUM recovery does not work), although DRUM cartridge is not supposed to be empty.
2. DRUM Cartridge Shane mode DRUM cartridge became empty (DRUM recovery does not work), although DRUM cartridge is not supposed to be empty.

092-321 ADC K Patch System Fail

1. Detected (TC/SAD patch abnormal - pale color) Measurement result of potential/density patch shows abnormally pale color. DRUM cartridge became empty (DRUM recovery does not work), although DRUM cartridge is not supposed to be empty.
2. DRUM Cartridge Shane mode DRUM cartridge became empty (DRUM recovery does not work), although DRUM cartridge is not supposed to be empty.

Procedure

Perform the steps that follow:

1. Switch off then switch on the machine, GP 4, the fault persists,
2. Shake the TONER CARTRIDGE well and install to the IOT again.
3. Reseat the DRUM CARTRIDGE.
4. Install a new TONER CARTRIDGE, (See User Guide for ordering).
5. Install a new DRUM CARTRIDGE(YMCK). PL 8.1 Item 1, PL 8.1 Item 2, PL 8.1 Item 3, PL 8.1 Item 3.

092-606 to 678 ADC Fail RAP

092-606 ADC Sensor Dirty

1. Clean the CTD sensor with a clean and dry cotton swab.
2. Check connection of the SENSOR ASSY CTD (RAD Sensor).
3. Replace the SENSOR ASSY CTD (RAD Sensor).

092-675: ADC Tone Patch Fail Y

1. Check connection of the SENSOR ASSY CTD (RAD Sensor).
2. Replace the SENSOR ASSY CTD (RAD Sensor).

092-676: ADC Tone Patch Fail M

1. Check connection of the SENSOR ASSY CTD (RAD Sensor).
2. Replace the SENSOR ASSY CTD (RAD Sensor).

092-677: ADC Tone Patch Fail C

1. Check connection of the SENSOR ASSY CTD (RAD Sensor).
2. Replace the SENSOR ASSY CTD (RAD Sensor).

092-678: ADC Tone Patch Fail K

1. Check connection of the SENSOR ASSY CTD (RAD Sensor).
2. Replace the SENSOR ASSY CTD (RAD Sensor).

Procedure

Perform the steps that follow:

1. Switch off then switch on the machine, GP 4, the fault persists,
2. Clean the CTD sensor with a clean and dry cotton swab.
3. Check connection of the SENSOR ASSY CTD (RAD Sensor).
4. Replace the SENSOR ASSY CTD (RAD Sensor).

093-339 Toner Drum CRUM Authentication Fail RAP

093-339 Communication with CRUM authentication IC is abnormal. NAK is detected during communication with CRUM authentication IC..

Procedure

WARNING

Ensure that the electricity to the machine is switched off while performing tasks that do not need electricity. Refer to GP 4. Disconnect the power cord. Electricity can cause death or injury. Moving parts can cause injury.

1. Switch off then switch on the machine, GP 4.
2. Install a new MCU Board REP 18.1.1(MFP), REP 18.5.1(SFP)

093-400 to 093-425 DRUM Cartridge Near Empty RAP

093-400 DRUM CARTRIDGE Near Empty[K].

093-406 DRUM CARTRIDGE Pre Near Empty[K]

093-407 DRUM CARTRIDGE Pre Near Empty[Y]

093-408 DRUM CARTRIDGE Pre Near Empty[M]

093-409 DRUM CARTRIDGE Pre Near Empty[C]

093-423 DRUM CARTRIDGE Near Empty[Y].

093-424 DRUM CARTRIDGE Near Empty[M].

093-425 DRUM CARTRIDGE Near Empty[C].

Procedure

Make ready to install a new DRUM Cartridge of the same color.

093-912 to 939 and 096-918 DRUM CRUM Error RAP

093-912: Out of Black Toner (K) (MFP)

093-913: Check the Yellow Toner Cartridge (Y) Position (MFP)/ Insert Yellow Toner Cartridge. (SFP)

093-914: Check the Magenta Toner Cartridge (M) Position (MFP)/ Insert Magenta Toner Cartridge. (SFP)

093-915: Check the Magenta Toner Cartridge (C) Position (MFP) / Insert Cyan Toner Cartridge. (SFP)

093-916: DRUM CRUM K Not Position Fail

093-924: DRUM K CRUM Comm Fail

093-925: DRUM K CRUM Data Broken Fail

093-926: DRUM K CRUM Data Mismatch Fail

093-927: DRUM Y CRUM Comm Fail

093-928: DRUM M CRUM Comm Fail

093-929: DRUM C CRUM Comm Fail

093-933: DRUM Y CRUM Data Broken Fail

093-934: DRUM M CRUM Data Broken Fail

093-935: DRUM C CRUM Data Broken Fail

093-937: DRUM Y CRUM Data Mismatch Fail

093-938: DRUM M CRUM Data Mismatch Fail

093-939: DRUM C CRUM Data Mismatch Fail

096-918: XC 3rd Party CRUM Detect Fail

Initial Actions

1. **093-912 Only Replace the DRUM [K] Cartridge.**
2. Reseat the TONER CARTRIDGE (YMCK).
3. Perform the following steps:

WARNING

Ensure that the electricity to the machine is switched off while performing tasks that do not need electricity. Refer to GP 4. Disconnect the power cord. Electricity can cause death or injury. Moving parts can cause injury.

Procedure

1. Verify the connection between the DISP ASSY (YMCK) PL 5.1 Item 2, PL 5.1 Item 3, PL 5.1 Item 4, PL 5.1 Item 5 and the CRUM inside the TONER CARTRIDGE (YMCK) is free of dirt and foreign objects, clean as needed.
2. Verify the connection terminal of the CRUM inside the TONER CARTRIDGE (YMCK) not damaged.
   a. Install a new TONER CARTRIDGE (YMCK), (See User Guide for correct corresponding Toner cartridge number.
3. Verify the connection terminal of the DISP ASSY (YMCK) is undamaged.
4. Verify the connection between the DISP ASSY (YMCK) and the MCU Board PL 18.1 Item 1(MFP), PL 18.5 Item 1 (SFP).
5. Verify the connections at the DISP ASSY P/J111, P/J112, P/J113, and P/J110 at the MCU Board are fully seated.
6. Verify continuity of each cable between the DISP ASSY and the MCU Board; P/J111, P/J112, P/J113, P/J114<=>P/J110.
7. Install a new MCU Board REP 18.1.1(MFP), REP 18.5.1(SFP).

094-310, 325, 326 CDC (RAD Sensor) Sensor Error RAP

094-310 Measurement result under CTD Sensor LED OFF condition exceeds upper limit..

094-325 Measurement result under CTD Sensor LED OFF condition exceeds upper limit..

094-326 Measurement result under CTD Sensor LED OFF condition exceeds upper limit..

WARNING

Ensure that the electricity to the machine is switched off while performing tasks that do not need electricity. Refer to GP 4. Disconnect the power cord. Electricity can cause death or injury. Moving parts can cause injury.

Procedure

1. Turn the power of and back on GP 4,
2. Verify the CTD Sensor (part of the CTD Sensor ASSY) PL 6.1 Item 8 is clean and free of debris.
3. Verify the CTD SENSOR ASSY PL 6.1 Item 8 is installed properly.
4. Check the connection between the CTD SENSOR ASSY PL 6.1 Item 8 and the MCU Board PL 18.1 Item 1 at P/J140 and P/J141 are fully seated.
5. Check the continuity of each cable, P/J140 <=>P/J141, between the SENSOR ASSY CTD PL 6.1 Item 8 and the MCU Board PL 18.1 Item 1.
6. Verify the voltage between the MCU Board PL 18.1 Item 1 ground and P/J140-5PIN-10 is approximately +5 VDC.
   a. Check the connection at the PWBA LVPS and the PWBA MCU P/J284 and P/J280 are fully seated.
   b. Check the continuity between the PWBA LVPS and the PWBA MCU Is each cable of P/J284 <=>P/J280.
      - Install a new LV MCU HARNESS ASSY PL 18.8 Item 5.
   c. Check the voltage from the PWBA LVPS (+5 VDC). Voltage between the PWBA LVPS ground and the P/J284PIN-5 should be about +5 VDC.
      i. Check the connections at PWBA LVPS and the PWBA MCU, P/J284 and P/J280 are fully seated.
      ii. Check continuity between the PWBA LVPS and the PWBA MCU verify each cable of P/J284 <=>P/J280 is continuous.
         - Install a new LV MCU HARNESS ASSY PL 18.4 Item 5.
      iii. Check the voltage from the PWBA LVPS ground and the P/J284PIN-5 is about +5 VDC.
   d. Install new components as necessary:
      - CTD SENSOR ASSY REP 6.1.8
      - MCU Board, REP 18.1.1(MFP), REP 18.5.1(SFP)

094-318 1st BTR Position Fail RAP

094-318 1stBTR contact/retract did not complete within the start of operation through NVM:1st BTR Position Fail occurrence time.

WARNING

Ensure that the electricity to the machine is switched off while performing tasks that do not need electricity. Refer to GP 4. Disconnect the power cord. Electricity can cause death or injury. Moving parts can cause injury.

Procedure

Information only. No service action necessary. Advise the customer that the BTR is almost at end of life.

1. Turn the power of and back on GP 4,
2. Enter diagnosis dC330 094-201, and check the K Mode Sensor PL 6.1 Item 11 operation.
   a. Check the connection between the K Mode Sensor PL 6.1 Item 11 and the MCU Board P/J466, P/J468. and P/J460 are fully seated
   b. Check the continuity of each cable, P/J466 <=>P/J468, between the K Mode Sensor PL 6.1 Item 11 and P/J468.
      - Install a new HARNESS ASSY K-SNR-C, PL 18.4 Item 13.
   c. Check the continuity between P/J468 and the MCU Board PL 18.1 Item 1 of the cables P/J468 <=>P/J460.
      - Install a new HARNESS ASSY DEVE CL., PL 18.4 Item 12.
   d. Check the connection at the PWBA LVPS and the PWBA MCU P/J284 and P/J280 are fully seated.
   e. Check the continuity between the PWBA LVPS and the PWBA MCU Is each cable of P/J284 <=>P/J280.
      - Install a new LV MCU HARNESS ASSY PL 18.8 Item 5.
   f. Verify the voltage between the MCU Board PL 18.1 Item 1 ground and P/J460-12 pin is approximately +5 VDC.
      i. Verify the voltage from the PWBA LVPS (+5 VDC). Voltage between the PWBA LVPS ground and the P/J284PIN-5 should be about +5 VDC.
      ii. Check the connections at PWBA LVPS and the PWBA MCU, P/J284 and P/J280 are fully seated.
      iii. Check continuity between the PWBA LVPS and the PWBA MCU verify each cable of P/J284<=>P/J280 is continuous.
         - Install a new LV MCU HARNESS ASSY PL 18.4 Item 5.
      iv. Check the voltage from the PWBA LVPS ground and the P/J284PIN-5 is about +5 VDC.
   g. Install new components as necessary:
      - K Mode Sensor REP 6.1.11
      - MCU Board, REP 18.1.1(MFP), REP 18.5.1(SFP)
3. Enter diagnosis dC330 094-003/004, and check the Clutch Assy Switching (K Clutch) operation.

a. Check the connection between the Clutch Assy Switching Clutch (K Clutch) PL 3.1 Item 1 and the MCU Board P/J464 and P/J460 are fully seated

b. Verify the voltage to the Clutch Assy Switching Clutch (K Clutch) PL 3.1 Item 1 is approximately +24VDC.

c. Close all interlock switches. Voltage between the PWBA MCU ground and the P/J460-8 pin should read approximately +24VDC.

   i. Check the connections at PWBA LVPS and the PWBA MCU, P/J284 and P/J280 are fully seated.

   ii. Check continuity between the PWBA LVPS and the PWBA MCU verify each cable of P/J284 <=>P/J280 is continuous.

      - Install a new LV MCU HARNESS ASSY PL 18.4 Item 5.

   iii. Close all interlock switches and verify the voltage from the PWBA LVPS ground and the P/J284-18 pin and the voltage from the PWBA LVPS ground and the P/J284-20 pin is about +24 VDC.

d. Install new components as necessary:

   - MCU Board, REP 18.1.1(MFP), REP 18.5.1(SFP)
   - LVPS Board REP 18.1.16 (MFP), REP 18.5.16 (SFP)

4. Inspect the IBT UNIT deformed or damaged.

   - Install a new IBT Assy, REP 6.1.1.

099-396 to 099-399 Fuser Temperature Fault RAP

099-396 Fusing Ep U4 Noheat Center Fail - Temperature is not reached specified degrees within specified time.

099-397 Fusing Ep U4 Slowheat Center Fail - Temperature is not reached specified degrees within specified time.

099-398 Fusing Ep U4 Fastheat Center Fail - Over Temperature on FUSING ASSY detected.

099-399 Fusing Ep U4 Under Side Fail - Abnormal temperature of the FUSING ASSY is detected.

Procedure

WARNING

Ensure that the electricity to the machine is switched off while performing tasks that do not need electricity. Refer to GP 4. Disconnect the power cord. Electricity can cause death or injury. Moving parts can cause injury.

1. Verify the FUSING ASSY PL 7.1 Item 1 and the drawer connector of the printer are installed properly (without a bent pin, or any foreign or burnt objects, etc.).
2. Verify the connection between the FUSING ASSY PL 7.1 Item 1 and the MCU Board PL 18.1 Item 1(MFP), PL 18.5 Item 1(SFP), and the connection between the FUSING ASSY PL 7.1 Item 1 and the LVPS Board PL 18.1 Item 16(MFP), PL 18.5 Item 16(SFP) at P/J283, P/J275, P/J270, and P/J273 are fully seated. (Refer to Figure 1).
3. Verify the connection between the LVPS Board PL 18.1 Item 16(MFP), PL 18.5 Item 16(SFP) and the MCU Board PL 18.1 Item 1(MFP), PL 18.5 Item 1(SFP) at P/J284 and P/J280 are fully seated.
4. Verify the HARNESS ASSY FUSING ASSY PL 18.3 Item 1(MFP), PL 18.7 Item 1(SFP), continuity in each cable of P/J283<=>P/J275.
5. Verify the LV MCU HARNESS ASSY PL 18.4 Item 5(MFP), PL 18.8 Item 5(SFP), continuity in each cable of P/J284<=>P/J280.
6. Install a new FUSING ASSY PL 7.1 Item 1 REP 7.1.1.
7. Install a new LVPS Board REP 18.1.16(MFP), REP 18.5.16(SFP).
8. Install a new MCU Board REP 18.1.1(MFP), REP 18.5.1(SFP).

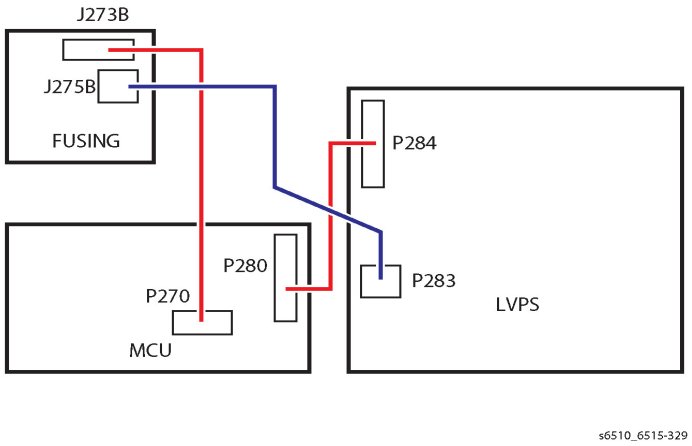
J273B
J275B
FUSING
P284
P280
P283
P270
LVPS
MCU
s6510_6515-329

Figure 1

102-311 to 102-319 USB Dongle Errors RAP

102-311 USB dongle access failed during the initial installation by the USB dongle.

003-312 It was detected that MAC address of another M/C was recorded in the dongle during the initial installation by the USB dongle.

102-313 An illegal IOT speed setting key was detected during the initial installation by the usb dongle.

003-314 Setting the IOT speed setting key failed during the initial installation by the USB dongle.

102-315 Setting the SW Key failed during the initial installation by the USB dongle.

003-316 Setting the supply setting failed during the initial installation by the USB dongle.

003-317 Setting the page pack failed during the initial installation by the USB dongle.

102-318 Setting the country code failed during the initial installation by the USB dongle.

003-319 The NVM rewriting list process failed during the initial installation by the USB dongle.

Initial Actions

Collect the detailed procedures below from the customer when a trouble occurred.

1. In which mode the problem occur? (Copy/Scan/Print/Fax)
2. What job was performed when the problem occurred?
3. Check the job settings from the UI.
4. Collect other information as much as possible to reproduce the error.
   - For Jobs that went through a network, also collect the output report and the network configuration.
   - For Print, also obtain the PRN file of the Job if possible.

Procedure

WARNING

Ensure that the electricity to the machine is switched off while performing tasks that do not need electricity. Refer to GP 4. Disconnect the power cord. Electricity can cause death or injury. Moving parts can cause injury.

Perform the steps that follow:

1. Perform 2.6 Log RAP to obtain the log files.
   - If there was a reboot after the error had occurred and hence was unable to obtain the log, set NVM (700-530) to “0” to perform log collection and return the NVM (700-530) to “1” after completing the procedure.
2. Perform Hardware Diagnostic using the LONGDIAG MODE in the Special Booting Menu. (Refer to GP 15 Special Boot Mode).
3. Check the version of Controller ROM. If it is not the latest, download and update to the latest software revision. (Refer to Firmware Version Upgrade GP 9.)
4. Turn the power off and on.

   5.The error persists after powering down and powering the machine back up, GP 4, Perform 2.6 Log RAP to obtain the log files.
6. Turn off the Power GP 4, unplug the power cord for 2 minutes, then turn on the Power again GP 4 to perform the same operation where the error occurred.
7. Verify the wire harness connections on each board are installed properly, then perform the same operation creating the error.
8. Install a new ESS Board REP 18.1.5 (MFP), REP 18.5.5 (SFP) and perform the same operation where the error occurred.
9. Reinstall the original ESS Board and contact Support for instructions.

102-356 EWS Soft Fail RAP

102-356 Fatal error related to EWS.

Initial Actions

Collect the detailed procedures below from the customer when a trouble occurred.

1. In which mode the problem occur? (Copy/Scan/Print/Fax)
2. What job was performed when the problem occurred?
3. Check the job settings from the UI.
4. Collect other information as much as possible to reproduce the error.
   - For Jobs that went through a network, also collect the output report and the network configuration.
   - For Print, also obtain the PRN file of the Job if possible.

Procedure

WARNING

Ensure that the electricity to the machine is switched off while performing tasks that do not need electricity. Refer to GP 4. Disconnect the power cord. Electricity can cause death or injury. Moving parts can cause injury.

Perform the steps that follow:

1. Perform 2.6 Log RAP to obtain the log files.
   - If there was a reboot after the error had occurred and hence was unable to obtain the log, set NVM (700-530) to “0” to perform log collection and return the NVM (700-530) to “1” after completing the procedure.
2. Perform Hardware Diagnostic using the LONGDIAG MODE in the Special Booting Menu. Refer to GP 15 Special Boot Mode.
3. Check the version of Controller ROM. If it is not the latest, download and update to the latest software revision. (Refer to Firmware Version Upgrade GP 9.)
4. Turn the power off and on.

   5.The error persists after powering down and powering the machine back up, GP 4, Perform 2.6 Log RAP to obtain the log files.
6. Turn off the Power GP 4, unplug the power cord for 2 minutes, then turn on the Power again GP 4 to perform the same operation where the error occurred.
7. Verify the wire harness connections on each board are installed properly, then perform the same operation creating the error.
8. Switch off then switch on the machine, GP 4.
9. Check the version of Controller ROM.
   a. Verify the machine software version is the latest revision, download and install the latest software if it is not. (Refer to Firmware Version Upgrade GP 9.)
10. Perform 2.6 Log RAP to obtain the log files.
    - If there was a reboot after the error had occurred and hence was unable to obtain the log, set NVM (700-530) to “0” to perform log collection and return the NVM (700-530) to “1” after completing the procedure.
11. Check the connection between the ESS Board and the customer network or USB-connected workstation, then turn on the power.
12. Using the ping command check for faulty ports listed in Table 1 that may be in error:

Table 1

SNTP	SMB	lpd	USB	Salutation IO
NetWare	Port 9100	FTP Serv	IPP	MailIO

13. The error persists, perform the same operation that created the error originally and Perform 2.6 Log RAP to obtain the log files.
14. Install a new ESS Board REP 18.1.5(MFP), REP 18.5.5(SFP) and perform the same operation where the error occurred.
15. Reinstall the original ESS Board and contact Support for instructions.

103-314 Prohibited Originals RAP

103-314 Possible prohibited originals (system fail).

Procedure

WARNING

Ensure that the electricity to the machine is switched off while performing tasks that do not need electricity. Refer to GP 4. Disconnect the power cord. Electricity can cause death or injury. Moving parts can cause injury.

Perform the steps that follow:

1. Switch off then switch on the machine, GP 4.
2. Reload the software, GP 4.
3. Install a new ESS Board REP 18.1.5 (MFP), REP 18.5.5 (SFP).

116-210, 116-211 Media Reader Error RAP

116-210 Fatal error of reader.

116-211 Connection cable disconnected.

Procedure

WARNING

Ensure that the electricity to the machine is switched off while performing tasks that do not need electricity. Refer to GP 4. Disconnect the power cord. Electricity can cause death or injury. Moving parts can cause injury.

Perform the steps that follow:

1. Switch off then switch on the machine, GP 4.
2. Check the Front USB Harness Assy PL 18.1 Item 14 with the power OFF and verify there are no anomalies with the harness.
   a. Install a new Front USB Harness Assy PL 18.1 Item 14.
3. The error persists, install a new ESS Board REP 18.1.5 (MFP), REP 18.5.5 (SFP).

116-212 ESS Error RAP

116-212 MediaLib internal logic error has occurred.

116-220 The downloader software that processes downloads within the ESS failed to initialize during transition into download mode.

Procedure

WARNING

Ensure that the electricity to the machine is switched off while performing tasks that do not need electricity. Refer to GP 4. Disconnect the power cord. Electricity can cause death or injury. Moving parts can cause injury.

Perform the steps that follow:

1. Perform 2.6 Log RAP to obtain the log files.
   - If there was a reboot after the error had occurred and hence was unable to obtain the log, set NVM (700-530) to “0” to perform log collection and return the NVM (700-530) to “1” after completing the procedure.
2. Perform Hardware Diagnostic using the LONGDIAG MODE in the Special Booting Menu. Refer to GP 15 Special Boot Mode.
3. Check the version of Controller ROM. If it is not the latest, download and update to the latest software revision. (Refer to Firmware Version Upgrade GP 9.)
4. Turn the power off and on.
5. The error persists after powering down and powering the machine back up, GP 4. Perform 2.6 Log RAP to obtain the log files.
6. Turn off the Power GP 4, unplug the power cord for 2 minutes, then turn on the Power again GP 4 to perform the same operation where the error occurred.
7. Verify the wire harness connections on each board are installed properly, then perform the same operation creating the error.
8. Install a new ESS Board REP 18.1.5 (MFP), REP 18.5.5 (SFP) and perform the same operation where the error occurred.
9. Reinstall the original ESS Board and contact Support for instructions.

116-314 Ethernet Address Fail RAP

116-314 An Ethernet error was detected.

Procedure

WARNING

Ensure that the electricity to the machine is switched off while performing tasks that do not need electricity. Refer to GP 4. Disconnect the power cord. Electricity can cause death or injury. Moving parts can cause injury.

Perform the steps that follow:

1. Switch off then switch on the machine, GP 4.
2. Verify the eMMC Board is fully seated in the socket of the ESS Board, PL 18.1 Item 5 (MFP), PL 18.5 Item 5 (SFP).
3. Switch off then switch on the machine, GP 4.
4. Check the version of Controller ROM.
   a. Verify the machine software version is the latest revision, download and install the latest software if it is not. (Refer to Firmware Version Upgrade GP 9.)
5. Perform 2.6 Log RAP to obtain the log files.
   - If there was a reboot after the error had occurred and hence was unable to obtain the log, set NVM (700-530) to “0” to perform log collection and return the NVM (700-530) to “1” after completing the procedure.
6. Check the connection between the ESS Board and the customer network or USB-connected workstation, then turn on the power.
7. Check use the ping command to check for faulty ports listed in Table 1 that may be in error:

Table 1

SNTP	SMB	lpd	USB	Salutation IO
NetWare	Port 9100	FTP Serv	IPP	MailIO

8. The error persists, perform the same operation that created the error originally and Perform 2.6 Log RAP to obtain the log files.
9. Install a new ESS Board REP 18.1.5 (MFP), REP 18.5.5 (SFP) and perform the same operation where the error occurred.
10. Reinstall the original ESS Board and contact Support for instructions.

116-321, 322, 328, 329, 338 Software Error RAP

116-321 Due to an error in software processing, subsequent processes cannot be performed.

116-322 Due to an error in software processing, subsequent processes cannot be performed.

116-328 A failure was detected in the level 2 cache built in the CPU.

116-329 A system call error related to the serial I/F was detected.

116-338 Overall JBA fatal error. Due to an error in software processing, subsequent processes cannot be performed.

Initial Actions

Collect the detailed procedures below from the customer when a trouble occurred.

1. In which mode the problem occur? (Copy/Scan/Print/Fax)
2. What job was performed when the problem occurred?
3. Check the job settings from the UI.
4. Collect other information as much as possible to reproduce the error.
   - For Jobs that went through a network, also collect the output report and the network configuration.
   - For Print, also obtain the PRN file of the Job if possible.

Procedure

WARNING

Ensure that the electricity to the machine is switched off while performing tasks that do not need electricity. Refer to GP 4. Disconnect the power cord. Electricity can cause death or injury. Moving parts can cause injury.

Perform the steps that follow:

1. Perform 2.6 Log RAP to obtain the log files.
   - If there was a reboot after the error had occurred and hence was unable to obtain the log, set NVM (700-530) to “0” to perform log collection and return the NVM (700-530) to “1” after completing the procedure.
2. Perform Hardware Diagnostic using the LONGDIAG MODE in the Special Booting Menu. Refer to GP 15 Special Boot Mode.
3. Check the version of Controller ROM. If it is not the latest, download and update to the latest software revision. (Refer to Firmware Version Upgrade GP 9.)
4. Turn the power off and on.
5. The error persists after powering down and powering the machine back up, GP 4. Perform 2.6 Log RAP to obtain the log files.
6. Turn off the Power GP 4, unplug the power cord for 2 minutes, then turn on the Power again GP 4 to perform the same operation where the error occurred.
7. Verify the wire harness connections on each board are installed properly, then perform the same operation creating the error.
8. Install a new ESS Board REP 18.1.5 (MFP), REP 18.5.5 (SFP) and perform the same operation where the error occurred.
9. Reinstall the original ESS Board and contact Support for instructions.

116-323 ESS NVRAM W/R Check Fail RAP

116-323 During a Read/Write check at power on, OS/DD detects an HW error with the NVRAM Board.

Procedure

WARNING

Ensure that the electricity to the machine is switched off while performing tasks that do not need electricity. Refer to GP 4. Disconnect the power cord. Electricity can cause death or injury. Moving parts can cause injury.

Perform the steps that follow:

1. Switch off then switch on the machine, GP 4.
2. Disconnect and reconnect the ESS Board and turn on the power.
   a. Install a new ESS Board REP 18.1.5 (MFP), REP 18.5.5 (SFP).
3. After installation of the ESS Board, SN mismatch will occur. perform dC132 to correct the SN mismatch issue.
4. Perform 2.6 Log RAP to obtain the log files.
   - If there was a reboot after the error had occurred and hence was unable to obtain the log, set NVM (700-530) to “0” to perform log collection and return the NVM (700-530) to “1” after completing the procedure.
5. Perform Hardware Diagnostic using the LONGDIAG MODE in the Special Booting Menu. Refer to GP 15 Special Boot Mode.
6. Check the version of Controller ROM. If it is not the latest, download and update to the latest software revision. (Refer to Firmware Version Upgrade GP 9.)
7. Switch off then switch on the machine, GP 4.
8. The error persists, immediately perform 2.6 Log RAP to obtain the log files.
9. Turn off the Power GP 4, unplug the power cord for 2 minutes
10. Turn on the Power again GP 4 to perform the same operation where the error occurred.
11. The error persists, immediately perform 2.6 Log RAP to obtain the log files.
12. Verify the wire harness connections on each board are installed properly, then perform the same operation creating the error.
13. Install a new ESS Board REP 18.1.5(MFP), REP 18.5.5 (SFP) and perform the same operation where the error occurred.
14. Reinstall the original ESS Board and contact Support for instructions.

116-324 and 116-328 Exception Fail RAP

116-324 Exception Fail - A fatal software exception error has occurred in the controller Board CPU.

116-328 L2 Cache Fail - A failure was detected in the Level 2 Cache built in the CPU.

Procedure

WARNING

Ensure that the electricity to the machine is switched off while performing tasks that do not need electricity. Refer to GP 4. Disconnect the power cord. Electricity can cause death or injury. Moving parts can cause injury.

Perform the steps that follow:

1. Switch off then switch on the machine, GP 4.
2. Install a new ESS Board REP 18.1.5(MFP), REP 18.5.5 (SFP).
3. Reload the software, GP 4.

116-325 ESS Fan Fail RAP

116-325 An error occurred in the rotation of the ESS fan.

Procedure

Not applicable to this machine, for information only.

116-334 ESS NVRAM Data Compare Fail

116-334 During a check of Read/Write at power on, System Cont detects [ESS-NVRAM with factory settings is installed] or [Illegal ESS-NVRAM data is occurring]. Because data for initialization in ESS-ROM is written on ESS-NVRAM data when 116-334 is detected, powering off and on after that causes System Fails (124-3xx) that indicate mismatches in various data between the three locations.

Procedure

WARNING

Ensure that the electricity to the machine is switched off while performing tasks that do not need electricity. Refer to GP 4. Disconnect the power cord. Electricity can cause death or injury. Moving parts can cause injury.

Perform the steps that follow:

1. Switch off then switch on the machine, GP 4.
2. Disconnect and reconnect the ESS Board and turn on the power.
   a. Install a new ESS Board REP 18.1.5 (MFP), REP 18.5.5 (SFP).
3. After installation of the ESS Board, SN mismatch will occur. perform dC132 to correct the SN mismatch issue.
4. Perform 2.6 Log RAP to obtain the log files.
   - If there was a reboot after the error had occurred and hence was unable to obtain the log, set NVM (700-530) to “0” to perform log collection and return the NVM (700-530) to “1” after completing the procedure.
5. Perform Hardware Diagnostic using the LONGDIAG MODE in the Special Booting Menu. Refer to GP 15 Special Boot Mode.
6. Check the version of Controller ROM. If it is not the latest, download and update to the latest software revision. (Refer to Firmware Version Upgrade GP 9.)
7. Switch off then switch on the machine, GP 4.
8. The error persists, immediately perform 2.6 Log RAP to obtain the log files.
9. Turn off the Power GP 4, unplug the power cord for 2 minutes
10. Turn on the Power again GP 4 to perform the same operation where the error occurred.
11. The error persists, immediately perform 2.6 Log RAP to obtain the log files.
12. Verify the wire harness connections on each board are installed properly, then perform the same operation creating the error.
13. Install a new ESS Board REP 18.1.5(MFP), REP 18.5.5 (SFP) and perform the same operation where the error occurred.
14. Reinstall the original ESS Board and contact Support for instructions.

116-342, 393, 394 ROM Version Incorrect RAP

116-342 Fatal error related to the SNMP agent.

116-393 AAA manager fatal error.

116-394 Abnormal authentication mode and accounting mode settings detected during AAA manager boot sequence.

Procedure

1. Reload the software, GP 4.
2. Perform 2.6 Log.

116-343, 346, 357, 359 Main Board Error RAP

116-343 An error was detected in the IC in the ESS Board.

116-346 A response such as system function recall error was detected.

116-357 PS Fatal System Error

116-359 Fatal error in PLW.

Initial Actions

Collect the detailed procedures below from the customer when a trouble occurred.

1. In which mode the problem occur? (Copy/Scan/Print/Fax)
2. What job was performed when the problem occurred?
3. Check the job settings from the UI.
4. Collect other information as much as possible to reproduce the error.
   - For Jobs that went through a network, also collect the output report and the network configuration.
   - For Print, also obtain the PRN file of the Job if possible.

Procedure

WARNING

Ensure that the electricity to the machine is switched off while performing tasks that do not need electricity. Refer to GP 4. Disconnect the power cord. Electricity can cause death or injury. Moving parts can cause injury.

Perform the steps that follow:

1. Perform 2.6 Log RAP to obtain the log files.
   - If there was a reboot after the error had occurred and hence was unable to obtain the log, set NVM (700-530) to “0” to perform log collection and return the NVM (700-530) to “1” after completing the procedure.
2. Perform Hardware Diagnostic using the LONGDIAG MODE in the Special Booting Menu. Refer to GP 15 Special Boot Mode.
3. Check the version of Controller ROM. If it is not the latest, download and update to the latest software revision. (Refer to Firmware Version Upgrade GP 9.)
4. Switch off then switch on the machine, GP 4.
5. The error persists, immediately perform 2.6 Log RAP to obtain the log files.
6. Turn off the Power GP 4, unplug the power cord for 2 minutes
7. Turn on the Power again GP 4 to perform the same operation where the error occurred.
8. The error persists, immediately perform 2.6 Log RAP to obtain the log files.
9. Verify the wire harness connections on each board are installed properly, then perform the same operation creating the error.
10. Install a new ESS Board REP 18.1.5(MFP), REP 18.5.5 (SFP) and perform the same operation where the error occurred.
11. Reinstall the original ESS Board and contact Support for instructions.

116-348, 349, 358, 360, 374 Redirecter Fail RAP

116-348 Various fatal errors detected in the redirecter.

116-349 An error occurred when calling the Pflite function using the SIF.

116-358 Fatal error related to salutation.

116-360 Fatal error related to SMB.

116-374 Fatal error of auto SW.

Initial Actions

Collect the detailed procedures below from the customer when a trouble occurred.

1. In which mode the problem occur? (Copy/Scan/Print/Fax)
2. What job was performed when the problem occurred?
3. Check the job settings from the UI.
4. Collect other information as much as possible to reproduce the error.
   - For Jobs that went through a network, also collect the output report and the network configuration.
   - For Print, also obtain the PRN file of the Job if possible.

Procedure

WARNING

Ensure that the electricity to the machine is switched off while performing tasks that do not need electricity. Refer to GP 4. Disconnect the power cord. Electricity can cause death or injury. Moving parts can cause injury.

Perform the steps that follow:

1. Perform 2.6 Log RAP to obtain the log files.
   - If there was a reboot after the error had occurred and hence was unable to obtain the log, set NVM (700-530) to “0” to perform log collection and return the NVM (700-530) to “1” after completing the procedure.
2. Perform Hardware Diagnostic using the LONGDIAG MODE in the Special Booting Menu. Refer to GP 15 Special Boot Mode.
3. Check the version of Controller ROM. If it is not the latest, download and update to the latest software revision. (Refer to Firmware Version Upgrade GP 9.)
4. Switch off then switch on the machine, GP 4.
5. The error persists, immediately perform 2.6 Log RAP to obtain the log files.
6. Turn off the Power GP 4, unplug the power cord for 2 minutes
7. Turn on the Power again GP 4 to perform the same operation where the error occurred.
8. The error persists, immediately perform 2.6 Log RAP to obtain the log files.
9. Verify the wire harness connections on each board are installed properly, then perform the same operation creating the error.
10. Install a new ESS Board REP 18.1.5(MFP), REP 18.5.5 (SFP) and perform the same operation where the error occurred.
11. Reinstall the original ESS Board and contact Support for instructions.

116-355 Agent Soft Fail RAP

116-355 Fatal error related to the SNMP Agent.

Procedure

WARNING

Ensure that the electricity to the machine is switched off while performing tasks that do not need electricity. Refer to GP 4. Disconnect the power cord. Electricity can cause death or injury. Moving parts can cause injury.

Perform the steps that follow:

1. Perform 2.6 Log RAP to obtain the log files.
   - If there was a reboot after the error had occurred and hence was unable to obtain the log, set NVM (700-530) to “0” to perform log collection and return the NVM (700-530) to “1” after completing the procedure.
2. Perform Hardware Diagnostic using the LONGDIAG MODE in the Special Booting Menu. Refer to GP 15 Special Boot Mode.
3. Check the version of Controller ROM. If it is not the latest, download and update to the latest software revision. (Refer to Firmware Version Upgrade GP 9.)
4. Switch off then switch on the machine, GP 4.
5. The error persists, immediately perform 2.6 Log RAP to obtain the log files.
6. Turn off the Power GP 4, unplug the power cord for 2 minutes
7. Turn on the Power again GP 4 to perform the same operation where the error occurred.
8. The error persists, immediately perform 2.6 Log RAP to obtain the log files.
9. Switch off then switch on the machine, GP 4.
10. Check the version of Controller ROM.
    a. Verify the machine software version is the latest revision, download and install the latest software if it is not. (Refer to Firmware Version Upgrade GP 9.)
11. Perform 2.6 Log RAP to obtain the log files.
    - If there was a reboot after the error had occurred and hence was unable to obtain the log, set NVM (700-530) to “0” to perform log collection and return the NVM (700-530) to “1” after completing the procedure.
12. Check the connection between the ESS Board and the customer network or USB-connected workstation, then turn on the power.
13. Using the ping command check for faulty ports listed in Table 1 that may be in error:

Table 1

SNTP	SMB	lpd	USB	Salutation IO
NetWare	Port 9100	FTP Serv	IPP	MailIO

14. The error persists, perform the same operation that created the error originally and Perform 2.6 Log RAP to obtain the log files.
15. Install a new ESS Board REP 18.1.5 (MFP), REP 18.5.5 (SFP) and perform the same operation where the error occurred.
16. Reinstall the original ESS Board and contact Support for instructions.

116-363, 370, 373, 376 Fatal Error RAP

116-363 BMLinkS/print service software failure.

116-370 Fatal error of XJCL.

116-373 Fatal error related to dynamic DNS.

116-376 Port 9100 software fail.

Procedure

WARNING

Ensure that the electricity to the machine is switched off while performing tasks that do not need electricity. Refer to GP 4. Disconnect the power cord. Electricity can cause death or injury. Moving parts can cause injury.

Perform the steps that follow:

1. Switch off then switch on the machine, GP 4.
2. Check the version of Controller ROM.
   a. Verify the machine software version is the latest revision, download and install the latest software if it is not. (Refer to Firmware Version Upgrade GP 9.)
3. Perform 2.6 Log RAP to obtain the log files.
   - If there was a reboot after the error had occurred and hence was unable to obtain the log, set NVM (700-530) to “0” to perform log collection and return the NVM (700-530) to “1” after completing the procedure.
4. Check the connection between the ESS Board and the customer network or USB-connected workstation, then turn on the power.
5. Check use the ping command to check for faulty ports listed in Table 1 that may be in error:

Table 1

SNTP	SMB	lpd	USB	Salutation IO
NetWare	Port 9100	FTP Serv	IPP	MailIO

6. The error persists, perform the same operation that created the error originally and Perform 2.6 Log RAP to obtain the log files.
7. Install a new ESS Board REP 18.1.5(MFP), REP 18.5.5 (SFP) and perform the same operation where the error occurred.
8. Reinstall the original ESS Board and contact Support for instructions.

116-364, 365, 366, 368, 371, 372, 375, 377 SW Fail RAP

116-364 An error in the timer was detected.

116-365 Fatal error of the SPL.

116-366 Print utility operational failure, report generator operational failure.

116-368 Fatal error of DumpPrint.

116-371 PCL decomposer software failure.

116-372 Fatal error of P-formatter.

116-375 A response such as system function recall error was detected.

116-377 Video DMA failure was detected.

Initial Actions

Collect the detailed procedures below from the customer when a trouble occurred.

1. In which mode the problem occur? (Copy/Scan/Print/Fax)
2. What job was performed when the problem occurred?
3. Check the job settings from the UI.
4. Collect other information as much as possible to reproduce the error.
   - For Jobs that went through a network, also collect the output report and the network configuration.
   - For Print, also obtain the PRN file of the Job if possible.

Procedure

WARNING

Ensure that the electricity to the machine is switched off while performing tasks that do not need electricity. Refer to GP 4. Disconnect the power cord. Electricity can cause death or injury. Moving parts can cause injury.

Perform the steps that follow:

1. Switch off then switch on the machine, GP 4.
2. Switch off then switch on the machine, GP 4.
3. Disconnect and reconnect the ESS Board and turn on the power.
   a. Install a new ESS Board REP 18.1.5(MFP), REP 18.5.5 (SFP).
4. After installation of the ESS Board, SN mismatch will occur. perform dC132 to correct the SN mismatch issue.
5. Perform 2.6 Log RAP to obtain the log files.
   - If there was a reboot after the error had occurred and hence was unable to obtain the log, set NVM (700-530) to “0” to perform log collection and return the NVM (700-530) to “1” after completing the procedure.
6. Perform Hardware Diagnostic using the LONGDIAG MODE in the Special Booting Menu. Refer to GP 15 Special Boot Mode.

7. Check the version of Controller ROM. If it is not the latest, download and update to the latest software revision. (Refer to Firmware Version Upgrade GP 9.)
8. Turn the power off and on.
9. The error persists after powering down and powering the machine back up, GP 4, Perform 2.6 Log RAP to obtain the log files.
10. Turn off the Power GP 4, unplug the power cord for 2 minutes, then turn on the Power again GP 4 to perform the same operation where the error occurred.
11. Verify the wire harness connections on each board are installed properly, then perform the same operation creating the error.
12. Install a new ESS Board REP 18.1.5 (MFP), REP 18.5.5 (SFP) and perform the same operation where the error occurred.
13. Reinstall the original ESS Board and contact Support for instructions.

116-378, 379, 395 MCR/MCC Soft Fail RAP

116-378 Fatal error related to MCR. Due to an error in software processing, subsequent processes cannot be performed.

116-369 Fatal error related to MCC. Due to an error in software processing, subsequent processes cannot be performed.

116-395 Fatal error related to USB.

Procedure

WARNING

Ensure that the electricity to the machine is switched off while performing tasks that do not need electricity. Refer to GP 4. Disconnect the power cord. Electricity can cause death or injury. Moving parts can cause injury.

Perform the steps that follow:

1. Switch off then switch on the machine, GP 4.
2. Check the version of Controller ROM.
   a. Verify the machine software version is the latest revision, download and install the latest software if it is not. (Refer to Firmware Version Upgrade GP 9.)
3. Perform 2.6 Log RAP to obtain the log files.
   - If there was a reboot after the error had occurred and hence was unable to obtain the log, set NVM (700-530) to “0” to perform log collection and return the NVM (700-530) to “1” after completing the procedure.
4. Check the connection between the ESS Board and the customer network or USB-connected workstation, then turn on the power.
5. Check use the ping command to check for faulty ports listed in Table 1 that may be in error:

Table 1

SNTP	SMB	lpd	USB	Salutation IO
NetWare	Port 9100	FTP Serv	IPP	MailIO

6. The error persists, perform the same operation that created the error originally and Perform 2.6 Log RAP to obtain the log files.
7. Install a new ESS Board REP 18.1.5 (MFP), REP 18.5.5 (SFP) and perform the same operation where the error occurred.
8. Reinstall the original ESS Board and contact Support for instructions.

116-381 ABL Version Fail RAP

116-381 ABL did not match the ABL version information on the NVM, or corrupted data was detected.

Procedure

1. Switch off then switch on the machine GP 4.
2. Perform Clear Controller NVM on the system. As this will clear all address information, Request permission from the user before performing this.

116-382 ABL Initialize Fail RAP

116-382 ABL has failed to access the NVM.

Procedure

WARNING

Ensure that the electricity to the machine is switched off while performing tasks that do not need electricity. Refer to GP 4. Disconnect the power cord. Electricity can cause death or injury. Moving parts can cause injury.

Perform the steps that follow:

1. Switch off then switch on the machine, GP 4.
2. Enter dC131. Set NVM value 790-664 to 0.
3. Reload the software, GP 4.
4. Ensure that all connectors on the MCU Board, PL 18.1 Item 1(MFP), PL 18.5 Item 1(SFP) and the ESS Board PL 18.1 Item 5(MFP), PL 18.5 Item 5(SFP) are securely connected. Make sure all surface mounted modules on both Boards are securely connected.
5. Install a new ESS Board REP 18.1.5 (MFP), REP 18.5.5 (SFP).

116-384, 385 DCS/IDC Software Fail RAP

116-384 DCS-related fatal error. Due to an error in software processing, subsequent processes cannot be performed.

116-385 Fatal error related to IDC. Due to an error in software processing, subsequent processes cannot be performed.

Initial Actions

Collect the detailed procedures below from the customer when a trouble occurred.

1. In which mode the problem occur? (Copy/Scan/Print/Fax)
2. What job was performed when the problem occurred?
3. Check the job settings from the UI.
4. Collect other information as much as possible to reproduce the error.
   - For Jobs that went through a network, also collect the output report and the network configuration.
   - For Print, also obtain the PRN file of the Job if possible.

Procedure

WARNING

Ensure that the electricity to the machine is switched off while performing tasks that do not need electricity. Refer to GP 4. Disconnect the power cord. Electricity can cause death or injury. Moving parts can cause injury.

Perform the steps that follow:

1. Perform 2.6 Log RAP to obtain the log files.
   - If there was a reboot after the error had occurred and hence was unable to obtain the log, set NVM (700-530) to “0” to perform log collection and return the NVM (700-530) to “1” after completing the procedure.
2. Perform Hardware Diagnostic using the LONGDIAG MODE in the Special Booting Menu. Refer to GP 15 Special Boot Mode.
3. Check the version of Controller ROM. If it is not the latest, download and update to the latest software revision. (Refer to Firmware Version Upgrade GP 9.)
4. Turn the power off and on. GP 4.
5. The error persists after powering down and powering the machine back up, GP 4, Perform 2.6 Log RAP to obtain the log files.
6. Turn off the Power GP 4, unplug the power cord for 2 minutes, then turn on the Power again GP 4 to perform the same operation where the error occurred.
7. Verify the wire harness connections on each board are installed properly, then perform the same operation creating the error.
8. Install a new ESS Board REP 18.1.2 (MFP), REP 18.5.2 (SFP) and perform the same operation where the error occurred.
9. Reinstall the original ESS Board and contact Support for instructions.

116-391 Illegal Code RAP

116-391 Country code/territory code/paper size group setting error detected.

Procedure

WARNING

Ensure that the electricity to the machine is switched off while performing tasks that do not need electricity. Refer to GP 4. Disconnect the power cord. Electricity can cause death or injury. Moving parts can cause injury.

Perform the steps that follow:

1. Switch off then switch on the machine, GP 4.
2. The error persists, enter dC131. Make sure NVM values 700-165, 700-338 and 700-402 are correct. Change the values as necessary.

116-396 FIPS140 Self Test Fail RAP

116-396 At start, the FIPS140 encryption module self-test has detected a failure. Self test error due to illegal ROM (FW).

Procedure

WARNING

Ensure that the electricity to the machine is switched off while performing tasks that do not need electricity. Refer to GP 4. Disconnect the power cord. Electricity can cause death or injury. Moving parts can cause injury.

Perform the steps that follow:

1. Switch off then switch on the machine, GP 4.
2. Reload the software, GP 9.

116-397 Illegal Setting Area Coverage Threshold RAP

116-397 The plain total color judge threshold setting is incorrect.

Procedure

WARNING

Ensure that the electricity to the machine is switched off while performing tasks that do not need electricity. Refer to GP 4. Disconnect the power cord. Electricity can cause death or injury. Moving parts can cause injury.

Perform the steps that follow:

1. Switch off then switch on the machine, GP 4.
2. Enter dC131. Make sure the value of 720-061 is higher than 720-060. Adjust the values as necessary.

116-399 Initialization RAP

116-399 The machine remains in initializing state even after 10 minutes has passed since it has started up (not including the startup after power save).

Procedure

WARNING

Ensure that the electricity to the machine is switched off while performing tasks that do not need electricity. Refer to GP 4. Disconnect the power cord. Electricity can cause death or injury. Moving parts can cause injury.

Perform the steps that follow:

1. Switch off then switch on the machine, GP 4.
2. The error persists, perform 2.6 Log procedure.

116-703 Postscript Language RAP

116-703 There is a problem in the PostScript data and an error occurred in PostScript grammar interpretation or language interpretation.

Procedure

Perform the steps that follow:

1. Perform 2.6 Log RAP to obtain the log files.
   - If there was a reboot after the error had occurred and hence was unable to obtain the log, set NVM (700-530) to “0” to perform log collection and return the NVM (700-530) to “1” after completing the procedure.
2. Change any possible mechanical settings for corrective actions or detection conditions and repeat the operation.
3. Check the version of Controller ROM. If it is not the latest, download and update to the latest software revision. (Refer to Firmware Version Upgrade GP 9.)
4. Turn the power off and on.Get the procedures for reproducing an error according to the operation that was performed when the error occurred.
   a. Check the exact occurrence timing during job execution.
   b. Check the job settings from the Panel.
   c. Collect other information as much as possible to reproduce the error.
5. Obtain logs immediately after the error has occurred without powering down and powering the machine back up,. Perform 2.6 Log RAP.
6. The ESS Board rarely fails, contact Technical Support for further instructions.

116-704 to 116-709, 716, 717 Media Reader Format RAP

116-704 The MediaLib detected this error while performing the operation that requires access to media.

116-705 The MediaLib detected this error while performing the operation that requires access to media.

116-706 The MediaLib detected this error while performing the operation that requires access to media.

116-707 The MediaLib detected this error while performing the operation that requires access to media.

116-708 The MediaLib detected this error while performing the operation that requires access to media.

116-709 The MediaLib detected this error while performing the operation that requires access to media.

116-716 The MediaLib detected this error while performing the operation that requires access to media.

116-717 The MediaLib detected this error while performing the operation that requires access to media.

Procedure

Perform the steps that follow:

1. Have the customer check the contents in the media for errors from the PC:
   a. Check the file format/directory and selected mode (digital camera print/document print).
   b. Check whether the printed file attribute information is displayed.
   c. Check whether the print file images are displayed.
   d. Check whether the printed file attribute information is displayed.
   e. The error persists, inform the customer that the media may be defective.
2. The error persists, inform the customer that the media may be defective.

116-710 HP-GL/2 Overflow RAP

116-710 HP-GL/2 overflow.

Procedure

Increase the HP-GL spool size.

116-714 HP-GL/2 Command Error RAP

116-714 HP-GL/2 command error occurred.

Procedure

Perform the steps that follow:

1. Reload the software, GP 9.

116-719 XPIF Parameter Cancelled RAP

116-719 Cancellation of the parameter(s) disabled by XPIF.

Procedure

Some of the parameters are disabled by XPIF so the device cannot execute them. Have the customer cancel the disabled parameter(s).

116-720 PCL Memory Low Page Simplified RAP

116-720 PCL Memory Low, Page Simplified

Procedure

- Deactivate the unnecessary ports.
- Adjust various buffer memory sizes.

116-721 to 116-724, 726, 727, 728 Color Print Permissions RAP

116-721 Color printing is prohibited in this time zone. Output changed to monochrome.

017-722 Color printing prohibited. Output changed to monochrome.

017-723 Color print attempted from a prohibited application. Output changed to monochrome.

017-724 Single sided print attempted from a prohibited application. Output changed to duplex.

017-726 Color, single sided print attempted. Output changed to monochrome, duplex.

017-727 Single sided print attempted. Output changed to duplex.

017-728 Prohibited print attempted. Output changed to acceptable output.

Procedure

Have the customer set the permissions as required.

116-738 Size/Orientation Mismatch RAP

017-738 Form overlay is impossible because the size/orientation of the form's drawing is different from that of the paper.

Procedure

Have the customer select paper that has the same size and orientation as the registered form.

116-739, 741, 742, 743 Out of Memory RAP

017-739 The form/logo data cannot be registered due to insufficient ram.

017-741 The form data cannot be registered due to the restriction on the no. of forms.

017-742 The logo data cannot be registered due to the restriction on the no. of logos.

017-743 The received data (form/logo) exceeded the registered buffer size.

Procedure

After checking the registered forms/logos using the Operation Panel utility, have the customer delete any unnecessary forms or logos.

116-740 Arithmetic Error RAP

017-740 The value calculated in the interpreter exceeded the limit.

Procedure

Have the customer upgrade the driver.

116-746 Selected Form Not Registered RAP

017-746 The specified form is not registered.

Procedure

Have the customer use a registered form or register the required form.

116-747, 116-748 Invalid Page Data RAP

017-747 After subtracting the paper margin from the valid coordinate area, the result of the calculation will be negative.

017-748 Drawing data does not exist in the page data.

Procedure

Have the customer repeat the operation.

116-749 PostScript Font Error RAP

017-749 Job was aborted because the specified font is not found.

Procedure

Have the customer add the necessary font, or specify a substitute font.

116-750 Banner Sheet Cancelled RAP

017-750 Banner sheet was cancelled.

Procedure

Have the customer set the banner sheet feed tray status to normal or change the banner sheet feed tray.

116-752 Print Job Ticket RAP

116-752 The machine received a print job ticket sent together with a PDF but the job ticket data includes printing instructions that are not supported by the machine.

Initial Actions

Collect the detailed procedures below from the customer when a trouble occurred.

1. In which mode the problem occur? (Copy/Scan/Print/Fax)
2. What job was performed when the problem occurred?
3. Check the job settings from the UI.
4. Collect other information as much as possible to reproduce the error.
   - For Jobs that went through a network, also collect the output report and the network configuration.
   - For Print, also obtain the PRN file of the Job if possible.

Procedure

WARNING

Ensure that the electricity to the machine is switched off while performing tasks that do not need electricity. Refer to GP 4. Disconnect the power cord. Electricity can cause death or injury. Moving parts can cause injury.

Perform the steps that follow:

1. Have the customer:
   a. Re-run the job.
   b. Print to a machine that supports the printing instructions.
2. Perform 2.6 Log RAP to obtain the log files.
   - If there was a reboot after the error had occurred and hence was unable to obtain the log, set NVM (700-530) to “0” to perform log collection and return the NVM (700-530) to “1” after completing the procedure.
3. Change any possible mechanical settings for corrective actions or detection conditions and repeat the operation.
4. Check the version of Controller ROM. If it is not the latest, download and update to the latest software revision. (Refer to GP 9 Firmware Version Upgrade)
5. Turn the power off and on.Get the procedures for reproducing an error according to the operation that was performed when the error occurred.
   a. Check the exact occurrence timing during job execution.
   b. Check the job settings from the Panel.
   c. Collect other information as much as possible to reproduce the error.
6. Obtain logs immediately after the error has occurred without powering down and powering the machine back up,. Perform 2.6 Log RAP.
7. The ESS Board rarely fails, contact Technical Support for further instructions.

116-771 to 116-780 Invalid JBIG Parameter RAP

116-771 An incorrect JBIG parameter DL was automatically corrected.

116-772 An incorrect JBIG parameter D was detected and automatically corrected.

116-773 An incorrect JBIG parameter P was detected and automatically corrected.

116-774 An incorrect JBIG parameter YD was detected and automatically corrected.

116-775 An incorrect JBIG parameter L0 was detected and automatically corrected.

116-776 An incorrect JBIG parameter MX was detected and automatically corrected.

116-777 An incorrect JBIG parameter MY was detected and automatically corrected.

116-778 An incorrect JBIG parameter VLENGTH was detected and automatically corrected.

116-780 The system detected an error in the document attached to the E-mail to XXX

Procedure

For information only. No service action necessary.

117-310 WSD Scan S/W Fail RAP

117-310 A problem occurred in the processing of WSD scan service software, causing the processing to discontinue.

Initial Actions

Collect the detailed procedures below from the customer when a trouble occurred.

1. In which mode the problem occur? (Copy/Scan/Print/Fax)
2. What job was performed when the problem occurred?
3. Check the job settings from the UI.
4. Collect other information as much as possible to reproduce the error.
   - For Jobs that went through a network, also collect the output report and the network configuration.
   - For Print, also obtain the PRN file of the Job if possible.

Procedure

WARNING

Ensure that the electricity to the machine is switched off while performing tasks that do not need electricity. Refer to GP 4. Disconnect the power cord. Electricity can cause death or injury. Moving parts can cause injury.

Perform the steps that follow:

1. Switch off then switch on the machine, GP 4.
2. Perform 2.6 Log RAP to obtain the log files.
   - If there was a reboot after the error had occurred and hence was unable to obtain the log, set NVM (700-530) to “0” to perform log collection and return the NVM (700-530) to “1” after completing the procedure.
3. Perform Hardware Diagnostic using the LONGDIAG MODE in the Special Booting Menu. Refer to GP 15 Special Boot Mode.
4. Check the version of Controller ROM. If it is not the latest, download and update to the latest software revision. (Refer to Firmware Version Upgrade GP 4.)
5. Turn the power off and on.

   6.The error persists after powering down and powering the machine back up, GP 4, Perform 2.6 Log RAP to obtain the log files.
7. Turn off the Power GP 4, unplug the power cord for 2 minutes, then turn on the Power again GP 4 to perform the same operation where the error occurred.
8. Verify the wire harness connections on each board are installed properly, then perform the same operation creating the error.
9. Install a new ESS Board REP 18.1.2 (MFP), REP 18.5.2 (SFP) and perform the same operation where the error occurred.
10. Reinstall the original ESS Board and contact Support for instructions.

117-312 Device Self Test Error RAP

117-312 In an OS self program determination test, it was detected that the checksum value and the mini OS/program were different.

Procedure

WARNING

Ensure that the electricity to the machine is switched off while performing tasks that do not need electricity. Refer to GP 10. Disconnect the power cord. Electricity can cause death or injury. Moving parts can cause injury.

Perform the steps that follow:

1. Reload the software, GP 4.
2. The error persists, install a new ESS Board, REP 18.1.1 (MFP), REP 18.5.1 (SFP).

117-313, 117-314 Geographic Region Change Fail RAP

117-313 The geographic region change command from the PJL can not be implemented.

117-314 The contract type change command from the PJL can not be implemented.

Procedure

Perform the steps that follow:

1. Switch off then switch on the machine, GP 4.
2. Have the customer install the latest PC software from the Xerox website.
3. Load the latest machine Firmware, GP 9.
4. The error persists, install a new ESS Board, REP 18.1.5 (MFP), REP 18.5.5 (SFP).

117-315 Contract Type/Geographic Region Changed RAP

117-315 The geographic region and contract type change command from the PJL was implemented.

Procedure

Have the customer install the correct CRUs for the changed geographic region and contract type.

117-316 Contract Manager Software Fail RAP

117-316 When the contract manager is running, it can no longer perform task control due to software malfunction.

Procedure

Perform the steps that follow:

1. Switch off then switch on the machine, GP 4.
2. The error persists, reload the software, GP 9.

117-317, 117-318 Contract Manager PPP RAP

117-317 The contract manager detected that the PPP contract has ended.

117-318 The contract manager detected that the DC command write that was performed at the end of a PPP contract has failed.

Procedure

Advise the customer to wait for the machine to reboot.

117-319 eMMC Board Program or Font Data Access RAP

117-319 When attempting to extract programs and font data from the eMMC Board into the memory immediately after Power ON, an access error occurs and retrying still results in access failure.

Initial Actions

Collect the detailed procedures below from the customer when a trouble occurred.

1. In which mode the problem occurred? (Copy/Scan/Print/Fax)
2. What job was performed when the problem occurred?
3. Check the job settings from the UI.
4. Collect other information as much as possible to reproduce the error.
   - For Jobs that went through a network, also collect the output report and the network configuration.
   - For Print, also obtain the PRN file of the Job if possible.

Procedure

WARNING

Ensure that the electricity to the machine is switched off while performing tasks that do not need electricity. Refer to GP 4. Disconnect the power cord. Electricity can cause death or injury. Moving parts can cause injury.

1. Switch off then switch on the machine, GP 4.
2. Perform 2.6 Log RAP to obtain the log files.
   a. [If there was a reboot after the error had occurred and hence was unable to obtain the log, set NVM (700- 530) to “0” to perform log collection and return the NVM (700-530) to “1” after completing the procedure.]
3. Perform the LONGDIAG MODE by the Special booting. Refer to GP 15 Special Boot Mode.
4. Check the version of Controller ROM. If it is not the latest, download the latest software. (Refer to Firmware Version Upgrade GP 9.)
5. Turn the power off and on, GP 4. Perform 2.6 Log RAP to obtain the log files.
6. Turn the power off and unplug the power cord for 2 minutes. Plug the power cord back in, restart the machine, and perform the operation again.
7. Verify the harness connections on each board are fully seated on each board and no physical issues with the harness exists, then repeat the operation.
8. Install a new ESS Board PL 18.1 Item 9, REP 18.1.9 and perform the same operation where the error occurred.

If the system is not restored after the ESS Board PL 18.1 Item 9 has been replaced, reinstall the original ESS Board and contact Support for instructions.

117-320 to 117-324, 327, 329, 338 eMMC Board Fail RAP

117-320 When starting, the eMMC Board hardware error was detected by SysCheckMemory.

117-321 When starting, the installed eMMC Board was detected to be unsupported by SysCheckMemory.

117-322 When starting, eMMC encryption error was detected by SysCheckMemory.

117-323 When starting, eMMC Board file system access error was detected by SysCheckMemory.

117-324 When the OS is starting up, the system detected that the eMMC Board is meant for another product and an error is issued.

117-327 Hardware fault processing of NVRAM area/access on the eMMC Board.

117-329 When starting up, the eMMC Board was detected to be not connected by the OS or SysCheckMemory.

117-338 Fault in the connection with eMMC Board is detected by the controller.

Initial Actions

1. Check the job settings from the UI.
2. Collect other information as much as possible to reproduce the error.
   - For Jobs that went through a network, also collect the output report and the network configuration.
   - For Print, also obtain the PRN file of the Job if possible.

Procedure

WARNING

Ensure that the electricity to the machine is switched off while performing tasks that do not need electricity. Refer to GP 4. Disconnect the power cord. Electricity can cause death or injury. Moving parts can cause injury.

1. Switch off then switch on the machine, GP 4.
2. Verify and install the latest firmware version GP 9
3. Initialize the eMMC GP 15.

   NOTE: *After performing GP 15 it may be necessary to perform dC132 to verify all Device IDs are same.*

4. Perform 2.6 Log RAP to obtain the log files.
   a. [If there was a reboot after the error had occurred and hence was unable to obtain the log, set NVM (700- 530) to “0” to perform log collection and return the NVM (700-530) to “1” after completing the procedure.]
5. Perform the LONGDIAG MODE by the Special booting. Refer to GP 15 Special Boot Mode.
6. Check the version of Controller ROM. If it is not the latest, download the latest software. (Refer to Firmware Version Upgrade GP 9.)
7. Turn the power off and on, GP 4. Perform 2.6 Log RAP to obtain the log files.
8. Turn the power off and unplug the power cord for 2 minutes. Plug the power cord back in, restart the machine, and perform the operation again.
9. Verify the harness connections on each board are fully seated on each board and no physical issues with the harness exists, then repeat the operation.
10. Install a new ESS Board PL 18.1 Item 9, REP 18.1.9 and perform the same operation where the error occurred.

If the system is not restored after the ESS Board PL 18.1 Item 9 has been replaced, reinstall the original ESS Board and contact Support for instructions.

117-325, 117-326 Access Fail RAP

117-325 Failed to obtain RTC timer value due to hardware problem in the contract function.

117-326 Software fault processing of NVRAM area/access.

Procedure

1. Switch off then switch on the machine, GP 4.
2. Perform 2.6 Log RAP to obtain the log files.

117-330 and 118-311 Soft Fail RAP

117-330 XBDS Soft Fail Problem occurs at software processing, and processing is unable to proceed..

118-311 GCP Soft Fatal Error Problem occurs at software processing, and processing is unable to proceed.

Procedure

WARNING

Ensure that the electricity to the machine is switched off while performing tasks that do not need electricity. Refer to GP 4. Disconnect the power cord. Electricity can cause death or injury. Moving parts can cause injury.

Perform the steps that follow:

1. Switch off then switch on the machine, GP 4.
2. Perform the same operation and check whether the problem is reoccurring.
3. Check whether HTTP and HTTPS have started up normally and are operable. As data is obtained via SNMP for the Alert section, it depends on whether the SNMP Agent has started up normally.
4. Switch off then switch on the machine, GP 4.
5. Check the version of Controller ROM.
   a. Verify the machine software version is the latest revision, download and install the latest software if it is not. (Refer to Firmware Version Upgrade GP 9.)
6. Perform 2.6 Log RAP to obtain the log files.
   - If there was a reboot after the error had occurred and hence was unable to obtain the log, set NVM (700-530) to “0” to perform log collection and return the NVM (700-530) to “1” after completing the procedure.
7. Check the connection between the ESS Board PL 18.1 Item 5(MFP), PL 18.5 Item 5(SFP) and the customer network or USB-connected workstation, then turn on the power.
8. Check use the ping command to check for faulty ports listed in Table 1 that may be in error:

Table 1

SNTP	SMB	lpd	USB	Salutation IO
NetWare	Port 9100	FTP Serv	IPP	MailIO

9. The error persists, perform the same operation that created the error originally and Perform 2.6 Log RAP to obtain the log files.
10. Install a new ESS Board REP 18.1.2(MFP), REP 18.5.2(SFP) and perform the same operation where the error occurred.
11. Reinstall the original ESS Board and contact Support for instructions.

117-332, 117-335 Uninitialized or Invalid NVM RAP

117-332 Uninitialize used NVM An uninitialized NVM that was used for another device was recognized.

117-335 Invalid NVM of Convert Fail detected at startup after the power is cut off during the NVM Map convert.

Procedure

Initialize the NVM, perform dC301 NVM Initialization.

117-333, 348, 364 Uninitialized or Used eMMC RAP

117-333 Uninitialize used eMMC An uninitialized eMMC Board that was used for another device was recognized.

117-348 Uninitialize used eMMC An uninitialized eMMC Board that was used for another device was recognized.

117-348 Key Fail

- The encryption key file was corrupted.
- The TPM key information file was corrupted.
- When automatically restoring the encryption key file, there was no TPM backup file or it was corrupted.
- Either of the access key information, MAC address, or serial number held in the SEEP area was changed.
- Failed to decrypt the encryption key in TPM.

Procedure

Perform procedure GP 15 Special Boot Modes “HDD Initialize Mode” to initialize the eMMC Board in the machine.

NOTE: *After performing GP 15* Special Boot Modes *it may be necessary to perform dC132 Device ID / Billing Data to verify all Device IDs are same.*

117-343 Log Sending Parameter Fail RAP

117-343 Log Sending Parameter Fail an incorrect setting of the log transfer function was detected.

Initial Actions

Collect the detailed procedures below from the customer when a trouble occurred.

1. When the Image Log function is disabled and the Auto Transfer function is enabled, [Transfer in Job Units] is set.
2. When the Job Log Auto Transfer function is disabled and the Auto Transfer function of the log is set to enabled.
3. Check the job settings from the UI.
4. Collect other information as much as possible to reproduce the error.
   - For Jobs that went through a network, also collect the output report and the network configuration.
   - For Print, also obtain the PRN file of the Job if possible.

Procedure

WARNING

Ensure that the electricity to the machine is switched off while performing tasks that do not need electricity. Refer to GP 4. Disconnect the power cord. Electricity can cause death or injury. Moving parts can cause injury.

Change the setting of Log Transfer function.

1. Switch off then switch on the machine, GP 4.
2. For detection condition 1, change the operation method for Log Auto Transfer to anything other than [Transfer in Job Units].
3. For detection condition 2, change the Auto Transfer function of the log to disable it.
4. Perform 2.6 Log RAP to obtain the log files.
   a. [If there was a reboot after the error had occurred and hence was unable to obtain the log, set NVM (700- 530) to “0” to perform log collection and return the NVM (700-530) to “1” after completing the procedure.]
5. Perform the LONGDIAG MODE by the Special booting. Refer to GP 15 Special Boot Mode.
6. Check the version of Controller ROM. If it is not the latest, download the latest software. (Refer to Firmware Version Upgrade GP 9.)
7. Turn the power off and on, GP 4. Perform 2.6 Log RAP to obtain the log files.
8. Turn the power off and unplug the power cord for 2 minutes. Plug the power cord back in, restart the machine, and perform the operation again.
9. Verify the harness connections on each board are fully seated on each board and no physical issues with the harness exists, then repeat the operation.
10. Install a new ESS Board PL 18.1 Item 9, REP 18.1.9 and perform the same operation where the error occurred.

If the system is not restored after the ESS Board PL 18.1 Item 9 has been replaced, reinstall the original ESS Board and contact Support for instructions.

117-344 Invalid User Job Type Fail RAP

117-344 The applicable user job cannot be executed at the system level.

Procedure

1. Switch off then switch on the machine, GP 4.
2. For Public Print, check whether it is set to be stored as Charge Print.
3. Perform the 2.6 Log procedure

117-345 SSMM Batch Setting Duration Fail RAP

117-345 During the batch setting of LoDeM, a reboot occurred due to a change in system data.

Procedure

WARNING

Ensure that the electricity to the machine is switched off while performing tasks that do not need electricity. Refer to GP 4. Disconnect the power cord. Electricity can cause death or injury. Moving parts can cause injury.

1. For a single occurrence, take no action.
2. Perform 2.6 Log RAP to obtain the log files.
   - If there was a reboot after the error had occurred and hence was unable to obtain the log, set NVM (700-530) to “0” to perform log collection and return the NVM (700-530) to “1” after completing the procedure.
3. Perform Hardware Diagnostic using the LONGDIAG MODE in the Special Booting Menu. Refer to GP 15 Special Boot Mode.
4. Check the version of Controller ROM. If it is not the latest, download and update to the latest software revision. (Refer to Firmware Version Upgrade GP 9).
5. Turn the power off and on.

   6.The error persists after powering down and powering the machine back up, GP 4, Perform 2.6 Log RAP to obtain the log files.
7. Turn off the Power GP 4, unplug the power cord for 2 minutes, then turn on the Power again GP 4 to perform the same operation where the error occurred.
8. Verify the wire harness connections on each board are installed properly, then perform the same operation creating the error.
9. Install a new ESS Board REP 18.1.2 (MFP), REP 18.5.2 (SFP) and perform the same operation where the error occurred.
10. Reinstall the original ESS Board and contact Support for instructions.

117-354, 356, 358 Job Limit System Fail RAP

117-354 Before Job execution, an error occurs in Coml_SsmiIsJoblimit.

117-356 During Job estimate acquisition, an error occurs.

117-358 Fatal error of JAL relationship in software processing.

Procedure

1. Switch off then switch on the machine, GP 4.
2. Perform 2.6 Log RAP to obtain the log files.

117-357 TPM Fail RAP

117-357 One of the following conditions was satisfied.

- TPM device could not be recognized.
- TPM self-diagnostic failed.
- Communications failure with TPM.
- TPM initialization failure.
- The key generated by the TPM was used, but the TPM can no longer be used.

Procedure

WARNING

Ensure that the electricity to the machine is switched off while performing tasks that do not need electricity. Refer to GP 4. Disconnect the power cord. Electricity can cause death or injury. Moving parts can cause injury.

1. For a single occurrence, take no action.
2. The error persists, perform the steps that follow:
   a. Switch off then switch on the machine, GP 4.
   b. Unplug the Power cord from the machine for 2 mins. to ensure the UI Panel is off.
   c. Ensure that all connectors on the MCU Board, PL 18.1 Item 1(MFP), PL 18.5 Item 1 (SFP) and the ESS Board, PL 18.1 Item 5 (MFP), PL 18.5 Item 5 (SFP) are securely connected. Make sure all surface mounted modules on both Boards are securely connected.
   d. Reload the software, GP 9.
   e. Install a new ESS Board, REP 18.1.5 (MFP), REP 18.5.5 (SFP).

117-360 Date Limit Exceeding Fail RAP

117-360 When the unit starts up in year 3036 or later, reset the time to year 2034 in order to avoid the year 2038 problem.

Procedure

WARNING

Ensure that the electricity to the machine is switched off while performing tasks that do not need electricity. Refer to GP 4. Disconnect the power cord. Electricity can cause death or injury. Moving parts can cause injury.

Perform the steps that follow:

1. Switch off then switch on the machine, GP 4.
   - When the power is turned on again, the time will be set to 2034 or later. Set the correct time again.
2. Reload the software, GP 9.
3. Install a new ESS Board, REP 18.1.5 (MFP), REP 18.5.5 (SFP).

117-362, 117-363 USB Dongle Fail RAP

117-362 During the initial installation by USB dongle, it fails to set the TSC contract mode .

117-363 During the initial installation by USB dongle, it fails to set the count-up mode .

Procedure

Perform the steps that follow:

1. Switch off then switch on the machine, GP 4.
2. Make sure the correct USB dongle is installed.

117-365 WiFi Long Diag Fail RAP

117-365 An error occurred in the WiFi diagnostics test.

Procedure

Perform the steps that follow:

1. After turning off the machine's power, check that the operation panel is not illuminated, and then turn on the power, GP 4.
2. Check the WiFi adapter connection or install a new ESS Board REP 18.1.5 (MFP), REP 18.5.5 (SFP).

118-310 IPSEC Internal Fail RAP

118-310 An internal error was detected during initialization of the IPSEC.

Initial Actions

Collect the detailed procedures below from the customer when a trouble occurred.

1. When the Image Log function is disabled and the Auto Transfer function is enabled, [Transfer in Job Units] is set.
2. When the Job Log Auto Transfer function is disabled and the Auto Transfer function of the log is set to enabled.
3. Check the job settings from the UI.
4. Collect other information as much as possible to reproduce the error.
   - For Jobs that went through a network, also collect the output report and the network configuration.
   - For Print, also obtain the PRN file of the Job if possible.

Procedure

WARNING

Ensure that the electricity to the machine is switched off while performing tasks that do not need electricity. Refer to GP 4. Disconnect the power cord. Electricity can cause death or injury. Moving parts can cause injury.

Change the setting of Log Transfer function.

1. Switch off then switch on the machine, GP 4.
2. For detection condition 1, change the operation method for Log Auto Transfer to anything other than [Transfer in Job Units].
3. For detection condition 2, change the Auto Transfer function of the log to disable it.
4. Perform 2.6 Log RAP to obtain the log files.
   a. [If there was a reboot after the error had occurred and hence was unable to obtain the log, set NVM (700- 530) to “0” to perform log collection and return the NVM (700-530) to “1” after completing the procedure.]
5. Perform the LONGDIAG MODE by the Special booting. Refer to GP 15 Special Boot Mode.
6. Check the version of Controller ROM. If it is not the latest, download the latest software. (Refer to Firmware Version Upgrade GP 9.)
7. Turn the power off and on, GP 4. Perform 2.6 Log RAP to obtain the log files.
8. Turn the power off and unplug the power cord for 2 minutes. Plug the power cord back in, restart the machine, and perform the operation again.
9. Verify the harness connections on each board are fully seated on each board and no physical issues with the harness exists, then repeat the operation.
10. Install a new ESS Board PL 18.1 Item 9, REP 18.1.9 and perform the same operation where the error occurred.

If the system is not restored after the ESS Board PL 18.1 Item 9 has been replaced, reinstall the original ESS Board and contact Support for instructions.

121-316 Accessory Conflict RAP

117-316 Prohibited combination of EP accessory connection and secure access authentication.

Procedure

WARNING

Ensure electricity to the machine is switched off while performing tasks that do not need electricity. Refer to GP 4. Disconnect the power cord. Electricity can cause death or injury. Moving parts can cause injury.

Perform the steps that follow:

1. Disconnect the FDI accessory.
2. Set the authentication method to an option other than Secure Access (either Authentication Off, Local Authentication or Remote Authentication).
3. Reconnect the FDI accessory.

121-318 Auth/Account Settings Not Supported RAP

117-318 Auth/account settings not supported.

Procedure

For information only. No service actions necessary.

123-310 to 123-399 UI Error RAP

123-310 The data sent from the UI to the controller exceeded the upper limit for the processing capability.

123-311 The data received from the controller exceeded the upper limit for the processing capability in the UI.

123-312 The data received from the controller has exceeded the upper limit of the processing capability in the UI.

123-325 The specified UI internal object could not be created due to a setting/specification error. UI-SW failure in the ESS PWB.

123-326 The memory in the GUAM exceeded the upper limit.

123-333 The H/W connection in the UI is faulty or the internal connection could not be correctly detected.

123-343 UI-SW failure in the ESS PWB.

123-344 UI-SW failure in the ESS PWB.

123-350 MCW panel one-touch key fail.

123-352 An error internal to the con-panel (an abnormal value in EEPROM for Sys) has been detected.

123-353 The control panel has detected that the UI cable is disconnected.

123-354 The control panel has detected a drop in +24V power voltage.

123-355 The control panel has detected a drop in +5V power voltage.

123-357 The control panel has detected that writing in the EEPROM has failed.

123-358 The control panel has detected that writing in the EEPROM for logging failed.

123-362 UI-SW failure in the ESS PWB.

123-368 There is insufficient memory or the connection failed.

123-369 UI-SW failure in the ESS PWB.

123-371 The parameter sent from the controller was incorrect.

123-374 The job ID parameter sent from the controller was incorrect.

123-377 UI-SW failure in the ESS PWB.

123-379 UI-SW failure in the ESS PWB.

123-380 UI-SW failure in the ESS PWB.

123-381 UI-SW failure in the ESS PWB.

123-382 UI-SW failure in the ESS PWB.

123-383 UI-SW failure in the ESS PWB.

123-384 UI-SW failure in the ESS PWB.

123-389 UI-SW failure in the ESS PWB.

123-390 UI-SW failure in the ESS PWB.

123-392 UI-SW failure in the ESS PWB.

123-393 UI-SW failure in the ESS PWB.

123-395 UI-SW failure in the ESS PWB.

123-396 UI-SW failure in the ESS PWB.

123-397 UI-SW failure in the ESS PWB.

123-398 UI-SW failure in the ESS PWB.

123-399 UI-SW failure in the ESS PWB.

WARNING

Ensure electricity to the machine is switched off while performing tasks that do not need electricity. Refer to GP 4. Disconnect the power cord. Electricity can cause death or injury. Moving parts can cause injury.

Procedure

Perform the steps that follow:

1. Make sure that the UI Cable connection section of the UI are installed properly and perform the same operation where the error occurred.
   - If the problem persists, perform the following procedures:
2. Obtain the log file using the log tool. Perform 2.6 Log RAP
   - If there was a reboot after the error had occurred and hence was unable to obtain the log, set NVM (700-530) to “0” to perform log collection and return the NVM (700-530) to “1” after completing the procedure.
3. Perform Hardware Diagnostic using the LONGDIAG MODE in the Special Booting Menu. GP 15 Special Boot Modes.
4. Check the version of Controller ROM. If it is not the latest, download and update to the latest software revision. Refer to Firmware Version Upgrade GP 9.
5. Switch the power Off and On, GP 4.
6. The error persists after turning the power off and on GP 4, obtain the log file using the log tool. Perform 2.6 Log RAP

7. Turn off the Power GP 4, unplug the power cord for 2 minutes, then turn on the Power again GP 4 to perform the same operation where the error occurred.
8. Verify the wire harness connections on each board are installed properly, then perform the same operation creating the error.
9. Install a new ESS Board REP 18.1.2 (MFP), REP 18.5.2 (SFP) and perform the same operation where the error occurred.
10. Reinstall the original ESS Board and contact the Support Department for instructions with the logs as required

124-310-314, 316, 318, 322, 324, 340, 356, 357, 360 ID/ Billing/Data Mismatch RAP

124-310 DC132 11 Product Number Not Specified.

124-311 DC132 09 Serial Number Not Specified.

124-312 Stored Data Mismatch. The Product Number Did Not Match.

124-313 DC132 10 Serial Number Not Mismatch.

124-314 DC132 01 Stored Data Mismatch.

124-316 DC132 03 Stored Data Mismatch.

124-318 DC132 07 Stored Data Mismatch.

124-322 DC132 05 Product Number Not Specified.

124-324 All Billings Mismatch.

124-340 CRUM Market Fail ALL.

124-356 SN Restoration Fail.

124-357 Product Number 1 Point Mismatch.

124-360 CRUM Validation Fail ALL.

Possible Parts Affected:

- MCU Board PL 18.1 Item 1 (MFP), PL 18.1 Item 5 (SFP)
- ESS Board PL 18.1 Item 5 (MFP), PL 18.5 Item 5 (SFP)

Procedure

WARNING

Ensure electricity to the machine is switched off while performing tasks that do not need electricity. Refer to GP 4. Disconnect the power cord. Electricity can cause death or injury. Moving parts can cause injury.

Perform the steps that follow:

1. Switch off then switch on the machine, GP 4.
2. Execute the diagnostic dC132 Device ID/Billing Data, compare the following 3 NVM values. and verify the 3 numbers match.
3. Install a new MCU Board REP 18.1.1 (MFP) REP 18.5.1 (SFP) and execute the diagnostic dC132 Device ID/Billing Data and verify the 3 numbers match.
4. If the fault persists, install a new ESS Board REP 18.1.2 (MFP), REP 18.5.2 (SFP) and execute the diagnostic dC132 Device ID/Billing Data and verify the 3 numbers match.

124-315, 317, 355 DC132 Error 02, 04 and 14 RAP

124-315: DC132 02 At least one IOT Speed value held in three locations was different.

124-317: DC132 04 At least one Product a/f Model identification information value held in three locations was different.

124-355: DC132 14 At least one set of territory information at the 3 locations is different.

Possible Parts Affected:

- MCU Board PL 18.1 Item 1 (MFP), PL 18.1 Item 5 (SFP)
- ESS Board PL 18.1 Item 5 (MFP), PL 18.5 Item 5 (SFP)

Procedure

WARNING

Ensure electricity to the machine is switched off while performing tasks that do not need electricity. Refer to GP 4. Disconnect the power cord. Electricity can cause death or injury. Moving parts can cause injury.

Perform the steps that follow:

1. Switch off then switch on the machine, GP 4.
2. Execute the diagnostic dC131 NVM Read/Write, compare the following 3 NVM values. and verify the 3 numbers match.
   - 700-600
   - 700-601
   - 700-602
3. Install a new MCU Board REP 18.1.1 (MFP) REP 18.5.1 (SFP) and execute the diagnostic dC132 Device ID/Billing Data, and verify the 3 numbers match.
4. Install a new ESS Board REP 18.1.2 (MFP), REP 18.5.2 (SFP) and execute the diagnostic dC132 Device ID/Billing Data, and verify the 3 numbers match.

124-319 DC132 Error 08 RAP

124-319: DC132 08 Stored data mismatch. Internal control error was detected.

Possible Parts Affected:

- MCU Board PL 18.1 Item 1 (MFP), PL 18.1 Item 5 (SFP)
- ESS Board PL 18.1 Item 5 (MFP), PL 18.5 Item 5 (SFP)

Procedure

WARNING

Ensure electricity to the machine is switched off while performing tasks that do not need electricity. Refer to GP 4. Disconnect the power cord. Electricity can cause death or injury. Moving parts can cause injury.

Perform the steps that follow:

1. Switch off then switch on the machine, GP 4.
2. Execute the diagnostic dC131 NVM Read/Write, compare the following 3 NVM values. and verify the 3 numbers match.
   - 700-606
   - 700-607
   - 700-608
3. Install a new MCU Board REP 18.1.1 (MFP) REP 18.5.1 (SFP) and execute the diagnostic dC132 Device ID/Billing Data, and verify the 3 numbers match.
4. Install a new ESS Board REP 18.1.2 (MFP), REP 18.5.2 (SFP) and execute the diagnostic dC132 Device ID/Billing Data, and verify the 3 numbers match.

124-320 SEEPROM Fail RAP

124-320 Write error occurred in the SEEPROM on the ESS PWB.

Procedure

WARNING

Ensure electricity to the machine is switched off while performing tasks that do not need electricity. Refer to GP 4. Disconnect the power cord. Electricity can cause death or injury. Moving parts can cause injury.

Perform the steps that follow:

1. Switch off then switch on the machine, GP 4.
2. Ensure that all connectors on the ESS Board PL 18.1 Item 5 (MFP), PL 18.5 Item 5 (SFP) are securely connected. Make sure all surface mounted modules are securely connected.
3. Refer to Firmware Version Upgrade GP 9.
4. If the fault persists, Install a new ESS Board REP 18.1.2 (MFP), REP 18.5.2 (SFP)

124-321 Backup SRAM Fail RAP

124-321 Write error occurred in the NVM on the ESS PWB.

Procedure

WARNING

Ensure electricity to the machine is switched off while performing tasks that do not need electricity. Refer to GP 4. Disconnect the power cord. Electricity can cause death or injury. Moving parts can cause injury.

Perform the steps that follow:

1. Switch off then switch on the machine, GP 4.
2. Ensure that all connectors on the ESS Board PL 18.1 Item 5 (MFP), PL 18.5 Item 5 (SFP) are securely connected. Make sure all surface mounted modules are securely connected.
3. Refer to Firmware Version Upgrade GP 9.
4. If the fault persists, Install a new ESS Board REP 18.1.2 (MFP), REP 18.5.2 (SFP)

124-323 DC132 06 RAP

124-323 DC132 06 The billing counters in multiple locations are all different.

Possible Parts Affected:

- MCU Board PL 18.1 Item 1 (MFP), PL 18.1 Item 5 (SFP)
- ESS Board PL 18.1 Item 5 (MFP), PL 18.5 Item 5 (SFP)

Procedure

WARNING

Ensure electricity to the machine is switched off while performing tasks that do not need electricity. Refer to GP 4. Disconnect the power cord. Electricity can cause death or injury. Moving parts can cause injury.

Perform the steps that follow:

1. Switch off then switch on the machine, GP 4 the error persists,
2. Execute the diagnostic dC131 NVM Read/Write, compare the following 3 NVM values. and verify the 3 numbers match.
   - 700-603
   - 700-604
   - 700-605
3. Install a new MCU Board REP 18.1.1 (MFP) REP 18.5.1 (SFP) and execute the diagnostic dC132 Device ID/Billing Data, and verify the 3 numbers match.
4. Install a new ESS Board REP 18.1.2 (MFP), REP 18.5.2 (SFP) and execute the diagnostic dC132 Device ID/Billing Data, and verify the 3 numbers match.
5. Replace the Board whose values do not match.

124-325 Billing Restoration Fail RAP

124-325 It was detected that at boot, IOT Speed registration procedure status was 1 or 2.

Possible Parts Affected:

- MCU Board PL 18.1 Item 1 (MFP), PL 18.1 Item 5 (SFP)
- ESS Board PL 18.1 Item 5 (MFP), PL 18.5 Item 5 (SFP)

Procedure

WARNING

Ensure electricity to the machine is switched off while performing tasks that do not need electricity. Refer to GP 4. Disconnect the power cord. Electricity can cause death or injury. Moving parts can cause injury.

Perform the steps that follow:

1. Switch off then switch on the machine, GP 4.
2. Execute the diagnostic dC131 NVM Read/Write, compare the 3 serial numbers. and verify the 3 serial numbers match.
3. Install a new MCU Board REP 18.1.1 (MFP) REP 18.5.1 (SFP) and execute the diagnostic dC132 Device ID/Billing Data, and verify the 3 numbers match.
4. Install a new ESS Board REP 18.1.2(MFP), REP 18.5.2 (SFP) and execute the diagnostic dC132 Device ID/Billing Data, and verify the 3 numbers match.
5. Replace the Board whose values do not match.

124-326 IOT Speed Not Registered RAP

124-326 IOT Speed not registered.

Procedure

1. Switch off then switch on the machine, GP 4.
2. Advise the customer to follow the instructions on the UI in order to enter the SW key for changing IOT speed.

124-327 IOT Speed Change Fail RAP

124-327 A SW error was detected during the procedure for changing IOT speed.

1. A failure to shift to Diag Mode.
2. A failure in dC132.
3. A failure to read from/write in SEEP ROM.
4. A failure to reboot.

Procedure

WARNING

Ensure electricity to the machine is switched off while performing tasks that do not need electricity. Refer to GP 4. Disconnect the power cord. Electricity can cause death or injury. Moving parts can cause injury.

Perform the steps that follow:

1. Switch off then switch on the machine, GP 4.

124-334 to 124-335 ESS ROM DIMM RAP

124-334 An error was detected in the standard built-in font ROM.

124-335 The installation of the font ROM was not detected.

124-337 An error was detected in the ESS built-in standard RAM.

Procedure

WARNING

Ensure electricity to the machine is switched off while performing tasks that do not need electricity. Refer to GP 4. Disconnect the power cord. Electricity can cause death or injury. Moving parts can cause injury.

Perform the steps that follow:

1. Switch off then switch on the machine, GP 4.
2. Install the latest software version, GP 9.

124-337 ESS Standard RAM Error RAP

124-337 An error was detected in the ESS Built-In Standard RAM.

Procedure

WARNING

Ensure electricity to the machine is switched off while performing tasks that do not need electricity. Refer to GP 4. Disconnect the power cord. Electricity can cause death or injury. Moving parts can cause injury.

Perform the steps that follow:

1. Switch off then switch on the machine, GP 4,
2. If the fault persists, Install a new ESS Board REP 18.1.2 (MFP), REP 18.5.2 (SFP).

124-341, 351, 361, 381, 391 CRUM Market Fail MCU RAP

124-341: CRUM Market Fail MCU One of the CRUM destinations stored in three positions does not match (Data stored in the MCU Board does not match).

124-351: CRUM OEM Fail MCU One of the CRUM destinations stored in three positions does not match (Data stored in the MCU Board does not match).

124-361: CRUM Validation Fail MCU One of the CRUM destinations stored in three positions does not match (Data stored in the MCU Board does not match).

124-381: CRUM MarketFail MCU (2) destinations stored in three positions does not match (Data stored in the MCU Board does not match).

124-391: CRUM OEM Fail MCU (2) destinations stored in three positions does not match (Data stored in the MCU Board does not match).

Procedure

WARNING

Ensure electricity to the machine is switched off while performing tasks that do not need electricity. Refer to GP 4. Disconnect the power cord. Electricity can cause death or injury. Moving parts can cause injury.

Perform the steps that follow:

1. Switch off then switch on the machine, GP 4, the error persists.
2. Execute the diagnostic dC132 Device ID/Billing Data.
3. Install a new MCU Board REP 18.1.1(MFP) REP 18.5.1(SFP) and execute the diagnostic dC132 Device ID/Billing Data.

124-342, 343, 352, 362, 363, 382, 383, 392, 393 CRUM Fail SYS RAP

124-342 CRUM Market Fail SYS 1

124-343 CRUM Market Fail SYS 2

124-352 CRUM OEM Fail SYS 1

124-353 CRUM OEM Fail SYS 2

124-362 CRUM Validation Fail SYS 1

124-363 CRUM Validation Fail SYS 2

124-382 CRUM Market Fail SYS 1 (2)

124-383 CRUM Market Fail SYS 2 (2)

124-392 CRUM OEM Fail SYS 1 (2)

124-393 CRUM OEM Fail SYS 2 (2)

Possible Parts Affected:

- eMMC Board PL 18.1 Item 30
- ESS Board PL 18.1 Item 5 (MFP), PL 18.5 Item 5 (SFP)

Procedure

WARNING

Ensure electricity to the machine is switched off while performing tasks that do not need electricity. Refer to GP 4. Disconnect the power cord. Electricity can cause death or injury. Moving parts can cause injury.

Perform the steps that follow:

1. Switch off then switch on the machine, GP 4.
2. Execute the diagnostic dC132 Device ID/Billing Data.
3. Power down the machine, remove the eMMC card, then power the machine up.
4. If the fault persists, install a new ESS Board REP 18.1.2 (MFP), REP 18.5.2 (SFP) and execute the diagnostic dC132 Device ID/Billing Data and verify the 3 ID numbers match.

124-344, 346, 348 Billing Meter Mismatch RAP

124-344: All Billings Metertypes Mismatch All the billing count types kept at multiple locations are different.

124-346: All Billing CountTypes Mismatch All the billing count types kept at multiple locations are different.

124-348: All Modal Break Points Mismatch All the Modal Break Points kept at multiple locations are different.

Possible Parts Affected:

- MCU Board PL 18.1 Item 1 (MFP), PL 18.1 Item 5 (SFP)
- ESS Board PL 18.1 Item 5 (MFP), PL 18.5 Item 5 (SFP)

Procedure

WARNING

Ensure electricity to the machine is switched off while performing tasks that do not need electricity. Refer to GP 4. Disconnect the power cord. Electricity can cause death or injury. Moving parts can cause injury.

Perform the steps that follow:

1. Switch off then switch on the machine, GP 4.
2. Execute diagnostic dC132 Device ID/Billing Data.
3. Install a new MCU Board REP 18.1.1(MFP) REP 18.5.1(SFP) enter dC132 Device ID/Billing Data.
4. Install a new ESS Board REP 18.1.2 (MFP), REP 18.5.2 (SFP) enter dC132 Device ID/Billing Data.

124-345 Billing Meter Type Restoration Fail RAP

124-345 When one billing meter types did not match, this machine tried to automatically correct it but failed.

Possible Parts Affected:

- MCU Board PL 18.1 Item 1 (MFP), PL 18.1 Item 5 (SFP)
- ESS Board PL 18.1 Item 5 (MFP), PL 18.5 Item 5 (SFP)

Procedure

WARNING

Ensure electricity to the machine is switched off while performing tasks that do not need electricity. Refer to GP 4. Disconnect the power cord. Electricity can cause death or injury. Moving parts can cause injury.

Perform the steps that follow:

1. Switch off then switch on the machine, GP 4.
2. Execute diagnostic dC131 NVM Read/Write, and verify the 2 numbers match.
   - 720-002
   - 720-062
3. Install a new MCU Board REP 18.1.1(MFP) REP 18.5.1(SFP) execute diagnostic dC131 NVM Read/Write, and verify the 2 numbers match.
4. Install a new ESS Board REP 18.1.2 (MFP), REP 18.5.2 (SFP) and execute diagnostic dC131 NVM Read/Write, and verify the 2 numbers match

124-347 Billing CountType Restoration Fail RAP

124-347 Billing Count Type Fail

Possible Parts Affected:

- MCU Board PL 18.1 Item 1 (MFP), PL 18.1 Item 5 (SFP)
- ESS Board PL 18.1 Item 5 (MFP), PL 18.5 Item 5 (SFP)

Procedure

WARNING

Ensure electricity to the machine is switched off while performing tasks that do not need electricity. Refer to GP 4. Disconnect the power cord. Electricity can cause death or injury. Moving parts can cause injury.

Perform the steps that follow:

1. Switch off then switch on the machine, GP 4.
2. Execute diagnostic dC131 NVM Read/Write, and verify the 2 numbers match.
   - 720-052
   - 720-063
3. Install a new MCU Board REP 18.1.1 (MFP) REP 18.5.1 (SFP) execute diagnostic dC131 NVM Read/Write, and verify the 2 numbers match.
4. Install a new ESS Board REP 18.1.2 (MFP), REP 18.5.2 (SFP) and execute diagnostic dC131 NVM Read/Write, and verify the 2 numbers match.

124-349 Modal Break Points Restoration Fail RAP

124-349 When one Modal Break Point did not match, this machine tried to automatically correct it but failed.l

Possible Parts Affected:

- MCU Board PL 18.1 Item 1 (MFP), PL 18.1 Item 5 (SFP)
- ESS Board PL 18.1 Item 5 (MFP), PL 18.5 Item 5 (SFP)

Procedure

WARNING

Ensure electricity to the machine is switched off while performing tasks that do not need electricity. Refer to GP 4. Disconnect the power cord. Electricity can cause death or injury. Moving parts can cause injury.

Perform the steps that follow:

1. Switch off then switch on the machine, GP 4.
2. Execute diagnostic dC131 NVM Read/Write, and verify the 2 numbers match.
   - 720-057
   - 720-064
3. Install a new MCU Board REP 18.1.1 (MFP) REP 18.5.1 (SFP) execute diagnostic dC131 NVM Read/Write, and verify the 2 numbers match.
4. Install a new ESS Board REP 18.1.2 (MFP), REP 18.5.2 (SFP) and execute diagnostic dC131 NVM Read/Write, and verify the 2 numbers match.

124-350, 354, 380, 390 CRUM OEM Fail All RAP

124-350 OEM fail ALL

124-354: DC132 13

124-380: CRUM Market fail ALL (2)

124-390: CRUM OEM fail ALL (2)

Procedure

WARNING

Ensure electricity to the machine is switched off while performing tasks that do not need electricity. Refer to GP 4. Disconnect the power cord. Electricity can cause death or injury. Moving parts can cause injury.

Perform the steps that follow:

1. Switch off then switch on the machine, GP 4.
2. Execute diagnostic dC131 NVM Read/Write.
3. Install a new MCU Board REP 18.1.1(MFP) REP 18.5.1(SFP)

124-359 IOT NVM Backup Restor Fail 1 RAP

124-359 It was detected that the Restore function of the IOT NVM, which checks three points for automatic correction, was executed and had finished successfully.

No Corrective Action Required

124-372, 373, 374 IOT Soft Fail RAP

124-372 IOT controller software failure.

124-373 IOT manager software failure.

124-374 IOT IM device driver software failure.

Procedure

WARNING

Ensure that the electricity to the machine is switched off while performing tasks that do not need electricity. Refer to GP 4. Disconnect the power cord. Electricity can cause death or injury. Moving parts can cause injury.

Perform the steps that follow:

1. Perform Hardware Diagnostic using the LONGDIAG MODE in the Special Booting Menu. GP 15 Special Boot Modes.
2. Verify the wire harness connections on the ESS Board and MCU Board are installed properly and fully seated.
3. Obtain the log file using the log tool. Perform 2.6 Log RAP.
   - If there was a reboot after the error had occurred and hence was unable to obtain the log, set NVM (700-530) to “0” to perform log collection and return the NVM (700-530) to “1” after completing the procedure.
4. Check the version of Controller ROM. If it is not the latest, download and update to the latest software revision. Refer to Firmware Version Upgrade GP 9.
5. Switch the power Off and On, GP 4.

   6.The error persists after turning the power off and on GP 4, obtain the log file using the log tool. Perform 2.6 Log RAP.
7. Turn off the Power GP 4, unplug the power cord for 2 minutes, then turn on the Power again GP 4 to perform the same operation where the error occurred.
8. If the problem is related to the Net such as Scanner/Printer, proceed to the following for collecting data.
9. Install a new MCU Board REP 18.1.1 (MFP) REP 18.5.1 (SFP) and perform the same operation where the error occurred.
10. Install a new ESS Board REP 18.1.2 (MFP), REP 18.5.2 (SFP) and perform the same operation where the error occurred.
11. Reinstall the original ESS Board and contact Support for instructions.

127-310 ESS Task Fatal Error RAP

127-310 ESR Task Fatal error - A fatal error occurred in ESR Task.

Procedure

WARNING

Ensure electricity to the machine is switched off while performing tasks that do not need electricity. Refer to GP 4. Disconnect the power cord. Electricity can cause death or injury. Moving parts can cause injury.

Perform the steps that follow:

1. Switch off then switch on the machine, GP 4.
2. Perform the 2.6 Log RAP.

127-311, 314, 315, 342 PSW Controller Unexpected Fail RAP

127-311 - PSW controller software failure.

127-314 ESR Task Fatal error - ESS detected a video link error.

127-315 ThinPrint S/W Fail - A problem has occurred with software processing, causing the processing to stop.

127-342 JobTemplate Monitor Fail - A problem has occurred with software processing, causing the processing to stop.

Initial Actions

Collect the detailed procedures below from the customer when a trouble occurred.

1. In which mode the problem occur? (Copy/Scan/Print/Fax)
2. What job was performed when the problem occurred?
3. Check the job settings from the UI.
4. Collect other information as much as possible to reproduce the error.
   - For Jobs that went through a network, also collect the output report and the network configuration.
   - For Print, also obtain the PRN file of the Job if possible.

Procedure

WARNING

Ensure that the electricity to the machine is switched off while performing tasks that do not need electricity. Refer to GP 4. Disconnect the power cord. Electricity can cause death or injury. Moving parts can cause injury.

Perform the steps that follow:

1. Obtain the log file using the log tool. Perform 2.6 Log RAP
   - If there was a reboot after the error had occurred and hence was unable to obtain the log, set NVM (700-530) to “0” to perform log collection and return the NVM (700-530) to “1” after completing the procedure.
2. Perform Hardware Diagnostic using the LONGDIAG MODE in the Special Booting Menu. GP 15 Special Boot Modes.
3. Check the version of Controller ROM. If it is not the latest, download and update to the latest software revision. Refer to Firmware Version Upgrade GP 9.
4. Switch the power Off and On, GP 4.
5. The error persists after turning the power off and on GP 4, obtain the log file using the log tool. Perform 2.6 Log RAP
6. Turn off the Power GP 4, unplug the power cord for 2 minutes, then turn on the Power again GP 4 to perform the same operation where the error occurred.
7. Verify the wire harness connections on each board are installed properly, then perform the same operation creating the error.
8. Install a new ESS Board REP 18.1.2 (MFP), REP 18.5.2 (SFP) and perform the same operation where the error occurred, **the error persists**.
9. Reinstall the original ESS Board and contact the Support Department for instructions.

127-353 to 127-399 Fatal Error RAP

127-353 LPD Soft Fatal Error - Fatal error related to LPD.

127-354 FTP Server Software Fail - Fatal error of FTP server was detected.

127-396 MailIO Soft Fatal Error - Fatal error related to mail IO.

127-398 IPP Soft Fatal Error - Fatal error related to IPP.

127-399 JME Soft Fatal Error - Fatal error related to JME.

Procedure

WARNING

Ensure that the electricity to the machine is switched off while performing tasks that do not need electricity. Refer to GP 4. Disconnect the power cord. Electricity can cause death or injury. Moving parts can cause injury.

Perform the steps that follow:

1. Switch off then switch on the machine, GP 4.
2. Check the version of Controller ROM.
   a. Verify the machine software version is the latest revision, download and install the latest software if it is not. Refer to GP 9 Firmware Version Upgrade.
3. Obtain the log file using the log tool. Perform 2.6 Log RAP
   - If there was a reboot after the error had occurred and hence was unable to obtain the log, set NVM (700-530) to “0” to perform log collection and return the NVM (700-530) to “1” after completing the procedure.
4. Check the connection between the ESS Board PL 18.1 Item 5 (MFP), PL 18.5 Item 5 (SFP) and the customer network or USB-connected workstation, then turn on the power.
5. Check use the ping command to check for faulty ports listed in Table 1 that may be in error:

Table 1

SNTP	SMB	lpd	USB	Salutation IO
NetWare	Port 9100	FTP Serv	IPP	MailIO

6. The error persists, perform the same operation that created the error originally and obtain the log file using the log tool. Perform 2.6 Log RAP
   a. Proceed with the following to collect the data recorded in each item.
      - 2.4.2 [Not connected to network] or [Unable to find the device from the PC]
      - 2.4.3 No output is available, no data is printed
7. Install a new ESS Board REP 18.1.2 (MFP), REP 18.5.2 (SFP) and perform the same operation where the error occurred.
8. Reinstall the original ESS Board and contact the Support Department for instructions.

133-210 to 133-701 FAX Parameter Incorrect RAP

133-210 The parameter value was inappropriate.

133-211 The PV exceeds the range.

133-212 The specified data was not found (incorrect number or channel).

133-213 The specified data cannot be read due to reasons such as the specified data is broken.

133-214 Detected by FAPE (create instance failed).

133-215 Sent to the FAPE as an asynchronized event.

133-216 Sent to the FAPE as an asynchronized event.

133-217 Sent to the FAPE as an asynchronized event.

133-218 Insufficient FAX card message library memory.

133-219 Due to insufficient memory, the system was unable to reserve the memory required for processing.

133-220 Due to an error during FAX controller software processing, subsequent processes cannot be performed.

133-221 The FAX card did not respond within the specified time on booting.

133-222 The FAX card did not respond within the specified time.

133-223 FAX card reset.

133-224 Version mismatch between the controller ROM and the FAX card ROM.

133-226 The code that does not provide FAX service is set in the system data country code.

133-701 Character replacement has occurred in destination name, sender name, comment, station name.

Initial Actions

Get the procedures for reproducing an error according to the operation that was performed when the error occurred.

1. Check the job type: Send Mail, Receive Mail, Broadcast Send, Polling, or Folder Receipt.
2. Check the job settings from the Panel.
3. Check whether it is Speed Dial or Keypad Dial.
4. Check which function was used: G3 or G4.
   - Collect other procedures as much as possible to reproduce the error.

Procedure

WARNING

Ensure that the electricity to the machine is switched off while performing tasks that do not need electricity. Refer to GP 4. Disconnect the power cord. Electricity can cause death or injury. Moving parts can cause injury.

Perform the steps that follow:

1. Verify the FAX Board PL 18.1 Item 9 and Fax Harness Assy PL 18.1 Item 10 connections are seated fully.
2. Obtain the Fax-related reports (Protocol Monitor, Activity Report, Configuration Report, Scan / Fax Configuration, and Job History Report).
   - Depending on the situation, such as in the cases of Broadcast Send or Folder Receipt, obtain the Speed Dial list or Stored Document list.
3. Check the version of Controller ROM. If it is not the latest, download and update to the latest software revision. (Refer to Firmware Version Upgrade GP 9)
4. Perform the same operation where the error occurred.
   - Install a new Front USB Harness Assy PL 18.1 Item 14.
5. Immediately after the error occurs, Perform 2.6 Log RAP to obtain the log files for Support.
6. Install a new FAX Board REP 18.1.9 and perform the operation again.
7. Reinstall the original FAX Board and contact the Support for instructions.

133-701 Replacement Character Detected RAP

Initial Actions

Get the procedures for reproducing an error according to the operation that was performed when the error occurred.

1. Check the job type: Send Mail, Receive Mail, Broadcast Send, Polling, or Folder Receipt.
2. Check the job settings from the Panel.
3. Check whether it is Speed Dial or Keypad Dial.
4. Check which function was used: G3 or G4.
   - Collect other procedures as much as possible to reproduce the error.

Procedure

WARNING

Ensure that the electricity to the machine is switched off while performing tasks that do not need electricity. Refer to GP 4. Disconnect the power cord. Electricity can cause death or injury. Moving parts can cause injury.

Perform the steps that follow:

1. Request the customer to set the characters used referring to the User Documentation. If the customer does not know the type of letter that can be used, advise them to use only alphanumeric characters.
2. Check the sound of the telephone line by ear and verify whether the sound level is high enough to generate noise.
3. Check the line (telephone line, TA, etc.) for possible cause of noise.
4. Check the ground connection.
5. The Fax Job Fail occurs due to the remote machine's environment and the line status.

   NOTE: *If the Fail is occurring with a specific recipient, it is largely caused by the recipient's environment, and hence any adjustment at the device could result in it affecting the other communications,*

6. Verify the FAX Board PL 18.1 Item 9 and Fax Harness Assy PL 18.1 Item 10 connections are seated fully.
7. Obtain the Fax-related reports (Protocol Monitor, Activity Report, Configuration Report, Scan / Fax Configuration, and Job History Report).
   - Depending on the situation, such as in the cases of Broadcast Send or Folder Receipt, obtain the Speed Dial list or Stored Document list.
8. The Fax JobFail occurs due to the remote machines and line status.
   a. Check the remote machine, line status, and then repeat the operation.
9. If the error occurs frequently, take notes on the exact occurrence timings during job execution.
10. Immediately after the error occurs, do not power down and power up the machine, Perform 2.6 Log RAP to obtain the log files for Support.
11. Install a new FAX Board REP 18.1.9 and perform the operation again.
12. Reinstall the original FAX Board and contact the Support for instructions.

133-710 Tray Select Fail RAP

133-710 When printing FAX-received documents, it was performed via the bypass tray since the selected tray cannot be used for FAX.

Procedure

Perform the steps that follow:

1. Have the customer load the correct the paper size and type for FAX printing or specify the tray for FAX printing.
2. If the fault persists, perform the steps that follow:
   a. Switch off then switch on the machine, GP 4.
   b. Reload the software, GP 9.

500-030 dC612 Print NG IOT Wait State RAP

500-030 The machine changed state during dC612 Print Test Pattern.

Primary Causes

The following occurs (However, this includes the cases that may not occur when dC612 Print Test Pattern starts):

1. DC900G:
   a. Fusing Unit: Shifted to Warming Up and Sagging occurred. The CC Cleaner Position was moved from the Home Position
   b. Fusing Unit Relay State: Shifted to Not Ready.
   c. Drum Cycle State: Shifted to Cleaning Request.
   d. CC Wire Warning: Occurred.
   e. Reserve Tank State: Filling.
   f. Drum Crum State: Unknown.
2. DCC5540G/DC540G:
   a. Fusing Unit: Shifted to Warming Up and Sagging occurred.
   b. Reserve Tank State: Filling.

Procedure

Allow the machine to return from the wait state, then re-run the routine.

500-033, 500-035 Diag Documents RAP

500-033:Diag Document Not Detected/ Enough - The document is not loaded or the number of documents are less than expected when a diagnostics routine is performed.

500-035:Diag Document Invalid Size - The document size is different than expected when a Diagnostic routine is performed.

Procedure

Load the required number and/or size of documents, then re-run the routine.

500-990 dC612 Print NG By Any Reason RAP

500-990 Printing could not start due to unknown reason in dC612 Print Test Pattern print, or it was aborted.

Procedure

Re-run the routine.

2.6 Log RAP

2.6.1 Obtaining Logs Using [Web UI]

Procedure

1. Connect the PC to the Printer with the LAN cable.
2. Turn the power of the PC and the Printer ON. Check that the IP Address are already input so that they can communicate with each other.
3. Activate the Web UI.
   - Open the URL “http://Printer IP Address/” using a web browser.
   - The following window appears. (Figure 1)

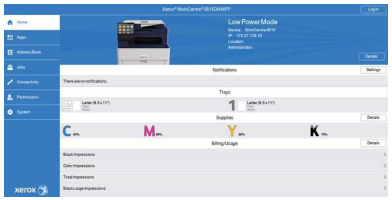

Figure 1

4. To enable the Audit Log, enable HTTP - SSL/TLS Communication. System > Security > SSL/TLS Settings
5. Activate the Logging Tool. System > Logs
   - The following window appears. (Figure 2)

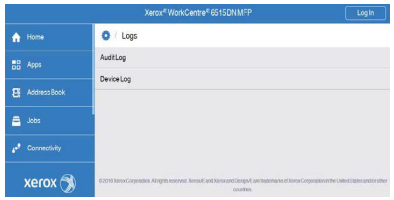

Figure 2

6. Collect the Audit Log. Select Audit Log in Logs Menu.
   - The following window appears. (Figure 3)

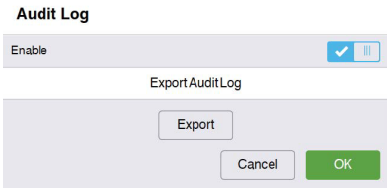

Figure 3

   a. Check Enable.
   b. Click Export. Collect the Audit Log.
   c. The collected Audit Log File (.txt) is saved.
7. Collect the Device Log. Select Device Log in Logs Menu.
   - The following window appears. (Figure 4)

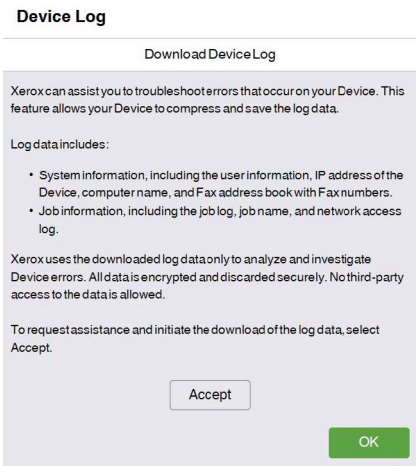

Figure 4

   a. Click Accept. Collect the Device Log.
   b. The collected Device Log file (.zip) is saved.
8. The collected logs send them to the Support Department.

OF-6B POST Fault Codes (LED) Complete RAP

Below are the Complete List of Power On Self Test Codes (POST)

Number	LED Pattern ■On /□Off 7,6,5,4	3,2,1,0	Situation	HW	problem	Normal Diagnosis	LongBoot Diagnosis	ChainLink
0x00	□□□□	□□□□	Initial status at power-on	ESS	ON: ESS Error	○	○	
0x01	□□□□	□□□■	After CA7 L1 Boot has completed, SPI initialization has completed	ESS	ON: ESS Error	○	○	
0x02	□□□□	□□■□	Before jumping to CA7 L2 Boot Stage 2	ESS	ON: ESS Error	○	○	
0x03	□□□□	□□■■	After jumping to CA7 L2 Boot Stage 2, after initialization during SPI	ESS	ON: ESS Error	○	○	
0x04	□□□□	■□□□	After DDR initialization has completed	ESS	ON: ESS Error	○	○	
0x05	□□□□	■□□■	obs	ESS	ON: ESS Error	○	○	
0x06	□□□□	■□■□	obs	ESS	ON: ESS Error	○	○	
0x07	□□□□	■□■■	obs	ESS	ON: ESS Error	○	○	
0x08	□□□□	■■□□	Before loading CA7 Boot Loader	ESS	ON: ESS Error	○	○	
0x09	□□□□	■■□■	Failed to load/jump to CA7 Boot Loader	ESS	ON: ESS Error	○	○	
0x0A	□□□□	■■■□	Reserved (OFF)					
0x10	□□□■	□□□□	Reserved (OFF)					
0x11	□□□■	□□□■	SPI module initialization has completed	ESS	ON: ESS Error	○	○	
0x12	□□□■	□□■□	I2C module initialization has completed	ESS	ON: ESS Error	○	○	
0x13	□□□■	□□■■	Interrupt controller initialization has completed	ESS	ON: ESS Error	○	○	
0x14	□□□■	■□□□	Debug serial initialization has completed	ESS	ON: ESS Error	○	○	
0x15	□□□■	■□□■	RTC Device initialization has completed	ESS	ON: ESS Error	○	○	
0x16	□□□■	■□■□	FCSPI module initialization has completed	ESS	ON: ESS Error	○	○	
0x17	□□□■	■□■■	SD Card Power ON has completed	ESS	ON: ESS Error	○	○	
0x18	□□□■	■■□□	Hard Disk Power ON has completed	ESS	ON: ESS Error			
0x19	□□□■	■■□■	CIP UI module initialization has completed	ESS	ON: ESS Error	○	○	
0x1A	□□□■	■■■□	Reserved (OFF)					
0x1B	□□□■	■■■■	Reserved (OFF)					
0x1C	□□□■	■■□□	Reserved (OFF)					
0x1D	□□□■	■■□■	Reserved (OFF)					
0x1E	□□□■	■■■□	Reserved (OFF)					
0x1F	□□□■	■■■■	Reserved (OFF)					
0x20	□□■□	□□□□	Software initialization process has started	ESS	ON: ESS Error	○	○	
0x21	□□■□	□□□■	Interrupt registration table initialization has completed	ESS	ON: ESS Error	○	○	
0x22	□□■□	□□■□	Interrupt vector copying and enabling has completed	ESS	ON: ESS Error	○	○	
0x23	□□■□	□□■■	Mac Address has been obtained and stored	ESS	ON: ESS Error	○	○	
0x24	□□■□	■□□□	Diag table initialization has completed	ESS	ON: ESS Error	○	○	
0x25	□□■□	■□□■	Memory area variable setting has completed	ESS	ON: ESS Error	○	○	
0x26	□□■□	■□■□	Memory area variable notification process has completed	ESS	ON: ESS Error	○	○	
0x27	□□■□	■□■■	Command table initialization has completed	ESS	ON: ESS Error	○	○	
0x28	□□■□	■■□□	Global variable initialization has completed	ESS	ON: ESS Error	○	○	
0x29	□□■□	■■□■	Connection Error : Check PWBA-AIR (eMMC daughter board).	ESS	ON: ESS Error	○	○	
0x2A	□□■□	■■■□	Reserved (OFF)					
0x2B	□□■□	■■■■	Reserved (OFF)					
0x2C	□□■□	■■□□	Reserved (OFF)					
0x2D	□□■□	■■□■	Reserved (OFF)					
0x2E	□□■□	■■■□	Reserved (OFF)					
0x2F	□□■□	■■■■	Reserved (OFF)					
0x30	□□■■	□□□□	JUMP to Mini OS section	ESS	ON: ESS Error	○	○	
0x31	□□■■	□□□■	JUMP to Panbug Main section	ESS	ON: ESS Error			
0xFF 0x00	■■■■ □□□□	■■■■ □□□□	Flashs 0xFF -> 0x00 repeatedly and alternately. DDR initialization process has failed	RAM	ON: ESS Error	○	○	
0xF0 0x0F	■■■■ □□□□	□□□□ ■■■■	Flashs 0xF0 and 0x0F repeatedly and alternately. Error : Checksum Error of the bootloader image loaded to the memory from FCSPI ROM.	RAM	Flashing: ESS Error	○	○	
0xA0 0x05	■□■□ □□□□	□□□□ □■□■	CA15-0: (0xA0 -> 0x05 is repeating alternately. CPLD is showing an invalid boot mode.	ESS	Flashing: ESS Error	○	○	
0x01 -> 0x80 0x80 -> 0x01	<<<

OF-07 Fax System Fail

Initial Actions

Get the procedures for reproducing an error according to the operation that was performed when the error occurred.

1. Check the job type: Send Mail, Receive Mail, Broadcast Send, Polling, or Folder Receipt.
2. Check the job settings from the Panel.
3. Check whether it is Speed Dial or Keypad Dial.
4. Check which function was used: G3 or G4.
   - Collect other procedures as much as possible to reproduce the error.

Procedure

WARNING

Ensure that the electricity to the machine is switched off while performing tasks that do not need electricity. Refer to GP 4. Disconnect the power cord. Electricity can cause death or injury. Moving parts can cause injury.

Perform the steps that follow:

1. Verify the FAX Board PL 18.1 Item 9 and Fax Harness Assy PL 18.1 Item 10 connections are seated fully.
2. Obtain the Fax-related reports (Protocol Monitor, Activity Report, Configuration Report, Scan / Fax Configuration, and Job History Report).
   - Depending on the situation, such as in the cases of Broadcast Send or Folder Receipt, obtain the Speed Dial list or Stored Document list.
3. Check the version of Controller ROM. If it is not the latest, download and update to the latest software revision. (Refer to GP 9 Firmware Version Upgrade)
4. Perform the same operation where the error occurred.
   - , Install a new Front USB Harness Assy PL 18.1 Item 14.
5. Immediately after the error occurs, obtain the log file using the log tool. (Refer to 2.6 Log)
6. Install a new FAX Board REP 18.1.9 and perform the operation again.
7. Reinstall the original FAX Board and contact the Support for instructions.

OF-11 Fax Job Fail

Initial Actions

Get the procedures for reproducing an error according to the operation that was performed when the error occurred.

1. Check the job type: Send Mail, Receive Mail, Broadcast Send, Polling, or Folder Receipt.
2. Check the job settings from the Panel.
3. Check whether it is Speed Dial or Keypad Dial.
4. Check which function was used: G3 or G4.
   - Collect other procedures as much as possible to reproduce the error.

Procedure

WARNING

Ensure that the electricity to the machine is switched off while performing tasks that do not need electricity. Refer to GP 4. Disconnect the power cord. Electricity can cause death or injury. Moving parts can cause injury.

Perform the steps that follow:

1. Check the sound of the telephone line by ear and verify whether the sound level is high enough to generate noise.
2. Check the line (telephone line, TA, etc.) for possible cause of noise.
3. Check the ground connection.
4. The Fax Job Fail occurs due to the remote machine's environment and the line status.

   NOTE: *If the Fail is occurring with a specific recipient, it is largely caused by the recipient's environment, and hence any adjustment at the device could result in it affecting the other communications,*

5. Verify the FAX Board PL 18.1 Item 9 and Fax Harness Assy PL 18.1 Item 10 connections are seated fully.
6. Obtain the Fax-related reports (Protocol Monitor, Activity Report, Configuration Report, Scan / Fax Configuration, and Job History Report).
   - Depending on the situation, such as in the cases of Broadcast Send or Folder Receipt, obtain the Speed Dial list or Stored Document list.
7. The Fax JobFail occurs due to the remote machines and line status.
   a. Check the remote machine, line status, and then repeat the operation.
8. If the error occurs frequently, take notes on the exact occurrence timings during job execution.
9. Immediately after the error occurs, do not power down and power up the machine, obtain the log file using the log tool. (Refer to 2.6 Log)
10. Install a new FAX Board REP 18.1.9 and perform the operation again.
11. Reinstall the original FAX Board and contact the Support for instructions.

OF-16 Fax Hardware Check Item Fail

Initial Actions

Get the procedures for reproducing an error according to the operation that was performed when the error occurred.

1. Check the job type: Send Mail, Receive Mail, Broadcast Send, Polling, or Folder Receipt.
2. Check whether any error occurs when transitioning to sleep mode or when there is a Job receipt during sleep mode.
3. Check whether there is any wrong line connection to the TEL terminal.
4. Check which function was used: G3, G4, or extended line.
5. Check the line (telephone line, TA, etc.) for possible cause of noise.
   - Collect other procedures as much as possible to reproduce the error.

Procedure

WARNING

Ensure that the electricity to the machine is switched off while performing tasks that do not need electricity. Refer to GP 4. Disconnect the power cord. Electricity can cause death or injury. Moving parts can cause injury.

Perform the following in sequence:

1. Check the sound of the telephone line by ear and verify whether the sound level is high enough to generate noise.
2. Verify the FAX Board PL 18.1 Item 9 is installed correctly.
3. Verify the FAX Board PL 18.1 Item 9 and Fax Harness Assy PL 18.1 Item 10 connections are seated fully.
4. Check the version of Controller ROM, if not, download the latest version GP 9 Firmware Version Update.
5. On the Fax menu screen, select [On-hook] and check whether the line sound can be heard from the speaker.
   - If no sound can be heard, other than problems with the line, it is also possible that the power supply (DC 5V system) to the Fax is malfunctioning.
   - Check the power system. (LVPS and power harness, loose connectors, etc.)
6. Disconnect and reconnect the FAX Phone Cable or replace it as needed.
   a. Check the remote machine, line status, and then repeat the operation.
7. If the error occurs frequently, take notes on the exact occurrence timings during job execution.
8. Immediately after the error occurs, do not power down and power up the machine, perform 2.6 Log RAP to obtain the log files for Support.
9. Install a new FAX Board REP 18.1.9 and perform the operation again.
10. Reinstall the original FAX Board, prepare the logs as required to be sent to Support, and contact Support for instructions.

FIP 2.4 NET System Fault Check RAP

Procedure

2.4.1 Interface (Physical/Logical)

1. Physical Interface Description

   The following interfaces are supported:

   a. USB
   b. Ethernet (10BaseT, 100BaseTX, 1000BASE-T) *1
   c. Wireless (optional) IEEE 802.11n/802.11g/802.11b/802.11a

   *1: Has a function to automatically detect and switch the transmission speed (10Mbps, 100Mbps, 1000Mbps). Also, the transmission speed can be fixed by settings.

2. Logical Interface Description

   a. It is possible to set whether to activate the system for each of the following logical interfaces. Default Activation: SMB (DLC), SNMP (IPX)

   Supported for receiving print jobs

   1. USB
   2. Lpd
   3. NewtWare
   4. AppleTalk (EtherTalk)
   5. SMB
   6. IPP
   7. Internet FAX Print
   8. Port9100
   9. CWSI File Upload Print

   Supported for receiving scan jobs

   10. Salutation Scan
   11. FTP Client
   12. Internet Fax Send
   13. SMB Client
   14. WebDAV Server

   Supported for management interface

   15. SNMP
   16. CWIS

   Supported for other services

   17. FTP Server

3 Image Quality

IQ1 Image Quality Entry 3-3
IQ2 Light or Undertoned Print 3-4
IQ3 Blank Print or Missing One Color 3-5
IQ4 Unfused Image 3-6
IQ5 Random Spots 3-7
IQ6 Bead Carry-Out 3-8
IQ7 Horizontal Banding 3-9
IQ8 Vertical Lines / Streaks 3-10
IQ9 Cyclic Dots / Line 3-11
IQ10 Vertical Deletions 3-12
IQ11 Diagonal Banding (Auger Marks) 3-13
IQ12 Uneven Density 3-14
IQ13 Ghosting 3-14
IQ14 High Background on Prints 3-15
IQ15 Fuzzy/Blurry Text and Image 3-16
IQ16 Wrinkled or Creased 3-17
IQ17 Leading Edge Paper Damage 3-18
IQ18 Incorrect Image Position or Margins 3-19
IQ19 Images are Skewed 3-19
IQ20 Color Registration is out of Alignment 3-20

IQ1 Image Quality Entry

The purpose of this procedure is to establish the source and type of imaging defect. Print-quality defects can be attributed to printer components, consumables, media, internal software, external software applications, and environmental conditions. To successfully troubleshoot print-quality problems, eliminate as many variables as possible. First, recreate the perceived defect using the customer's job or use diagnostic function DC612, which prints Test Patterns stored in the printer for checking image quality and isolating problems. Use approved media from a fresh ream acclimated to room temperature and humidity.

If the print-quality defect is still present after printing on approved media from an unopened ream of paper, investigate software applications being used and environmental conditions. Check the temperature and humidity under which the printer is operating. Compare this to the "Environmental Specifications". Extreme temperature and humidity can adversely affect the printer's xerographic and fusing characteristics.

When analyzing an imaging defect, determine if the defect is repeating or random. Continuous defects in the process direction, such as voids and lines, are the most difficult to diagnose. Check the CRU life counters for end of life conditions. Inspect the visible surfaces of all rollers for obvious defects. If a cursory inspection does not reveal any obvious defects, continue troubleshooting the defect, starting with the list of initial actions.

Initial Actions

Use the following steps to determine which part of the system is at fault.

1. If possible, discuss the defect with the customer to determine if the perceived defect is outside the printer's image specifications.
2. Ensure all connections to the printer are secure.
3. Check the CRU life counts. Replace components at end of life.
4. Cycle system power.
5. Make sure the printer is positioned to allow adequate airflow at all vents. Refer to GP 22, Installation Space Requirements.
6. Make sure the printer's interior is clean.
7. Check the tray guides.
8. Use the customer's print job to check defect reoccurrence. If the defect persists, begin to isolate the defect by attempting to identify the component responsible using the Repeating Patterns Test Print.
9. Check stored tray settings for media size and type.
10. Check image adjustment and print mode settings being used.
11. Check if defect occurs when printing or copying. Printing refers to using an electronic file as input; copying refers to using a hardcopy original as input. If defect occurs when copying, check if defect occurs from the platen or the DADF.

Defects Associated with Specific Components

To aid with defect diagnosis, listed below are defects associated with specific components.

Drum Cartridge image defects:

- Uneven density
- Background contamination
- Spots, smudges, or smears
- Ghosting
- Vertical white lines
- Vertical single-color line or band
- Stains on the page front
- Blank prints or prints missing one color
- Horizontal single-color lines or bands

Fuser image defects:

- Poor image adhesion
- Ghosting
- Stains on the page back or front
- Vertical line or spots
- Blurred image horizontally
- Wrinkled media
- Skewed image

Transfer Belt image defects:

- Uneven density
- Background contamination
- Vertical multi-color line or band

Transfer Roller image defects:

- Uneven Density
- Background contamination
- Ghosting
- Vertical white lines
- Vertical multi-color line or band
- Stains on the page back

LED Print Head (LPH) Unit image defects:

- Vertical white lines

Scanner image defects:

- Skewed image
- Vertical line

After determining the defect type and possible source, match the defect with those listed in Table 1. Go to the RAP listed to correct the defect.

Image Defect Definitions

Table 1 lists image defect definitions and the RAP(s) used to correct the defect.

Table 1 Image Defect Definitions

Defect	Definition	Go To
Light Prints	The overall image density is too light.	IQ2
Blank Prints	Prints with no visible image, or missing one color entirely.	IQ3
Unfused Image	Part or all of the image is unfused or smeared. Refer to the specification.	IQ4

Table 1 Image Defect Definitions

Defect	Definition	Go To
Random Spots	There are random spots of toner on the page.	IQ5
Bead Carry-Out	Media has gritty texture.	IQ6
Horizontal Banding	Low density or blurred image in horizontal direction.	IQ7
Vertical Lines/ Streaks	Extraneous dark lines/bands in the process direction.	IQ8
Cyclic Dots/Lines	Recurring color dots, spots, or lines in vertical direction.	IQ9
Vertical Deletions	Areas of image appear as vertical blanks or deletions.	IQ10
Diagonal Banding	Auger marks appear across output.	IQ11
Uneven Density	Uneven density, mottled image or text.	IQ12
Ghosting	The image from a previous print appears on the current print.	IQ13
High Background	Toner contamination on all or part of the page appears as a very light gray dusting or fog.	IQ14
Fuzzy/Blurry Text/ Image	Text in image is fuzzy or blurry along the edges.	IQ15
Wrinkled/Creased Paper	The paper comes out either wrinkled, creased, stained, or torn.	IQ16
Leading Paper Edge Damage	The page exits with the leading edge damaged.	IQ17
Incorrect Image Position or Margins	Image prints in wrong position or outside the page margins.	IQ18
Images are Skewed	Images in the output are not parallel to the edge of the printed sheet.	IQ19
Color Registration is out of Alignment	Image colors are not aligned with each other.	IQ20

IQ2 Light or Undertoned Print

The overall image density is too light (Figure 1).

WARNING

Switch off the electricity to the machine. Disconnect the power cord from the customer supply while performing tasks that do not need electricity. Electricity can cause death or injury. Moving parts can cause injury.

WARNING

Do not touch the Fuser while it is hot.

Initial Actions

After each action, print a test page to check if image quality improves.

- Check toner adhesion on the media output. If toner smears, see IQ4, Unfused Image.
- Check the Imaging Units' life counters. Replace the Imaging Units that are at end of life.
- Check that the Imaging Units' electrical contact points are clean.
- Clean the LED Print Heads (LPH) using the LPH Cleaning wand.
- Ensure that draft mode is turned Off.
- Ensure the printer is located in a humidity-controlled environment.

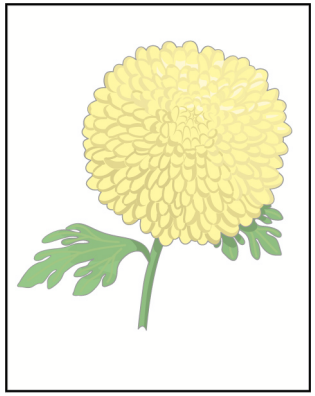

Light or Undertone Print

Figure 1 Light or Undertoned Print Example

Procedure

Check media condition. Load new, dry recommended paper, and print a test print. **The image is too light.**

Y **N**

Task is complete. Perform SCP 6 Final Actions.

Verify that the printer's media type is set appropriately for the media being used, and print a test print. **The image is too light.**

Y **N**

Task is complete. Perform SCP 6 Final Actions.

A

A

Remove and examine the Transfer Belt Unit for surface contamination or excessive wear. **The Transfer Belt Unit is good.**

Y N

Replace the Transfer Belt Unit, REP 6.1.1.

Print a test print. While the print is printing, turn off system power. Open the Rear Door and check the image formed on the Transfer Belt. **The image is poorly formed, faint and difficult to read.**

Y N

Replace the 2nd Bias Transfer Roller, REP 19.2.11 (MFP), REP 19.4.11 (SFP).

Replace the Transfer Belt Unit, REP 6.1.1. **Does the defect persist?**

Y N

Task is complete. Perform SCP 6 Final Actions.

B

IQ3 Blank Print or Missing One Color

No visible image anywhere on the output, or missing one color entirely (Figure 1).

WARNING

Switch off the electricity to the machine. Disconnect the power cord from the customer supply while performing tasks that do not need electricity. Electricity can cause death or injury. Moving parts can cause injury.

WARNING

Do not touch the Fuser while it is hot.

Initial Actions

After each action, print a test page to check if image quality improves.

- Ensure that all four Drum Cartridges are properly installed.
- Check CRU life counters. Replace components at end of life.
- Clean the LED Print Heads (LPH) using the LPH Cleaning Wand.
- Check for multi-sheet feeds.

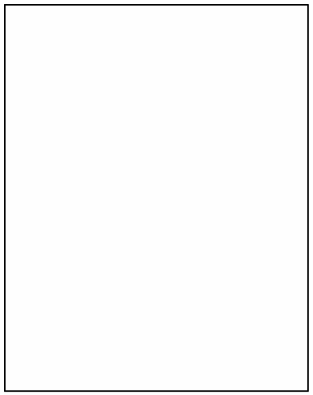

Blank Print

Figure 1 Blank Print Example

Procedure

Print customer demonstration print from the Control Panel > Device > About > Information Pages > Demonstration Print. **The print is blank or has a color missing.**

Y N

Check the customer's print job settings and the printer's Ethernet or USB connections. **Print job settings and network connections are good.**

Y N

Correct the settings or connections.

Task is complete. Perform SCP 6 Final Actions.

Check the test print is missing one or more colors. **The print is totally blank (missing all colors).**

B

Y N

Remove the Drum Cartridge of the affected color and clean the electrical contacts; then, reinstall the Drum Cartridge and rerun the test print. **The print is still missing the color.**

Y N

Task is complete. Perform SCP 6 Final Actions.

Remove the drum cartridge again and check the connection with the LED array (flat ribbon cable). **The connection is secure.**

Y N

Reseat the connector and perform SCP 6 Final Actions.

Swap the LED array from the affected color with an LED array from a different (unaffected color). Repeat the test print. **The defect persists with the original color.**

Y N

Replace the defective LED array.

Replace the Drum Cartridge of the affected color. Repeat the test print. **The defect persists.**

Y N

Task is complete. Perform SCP 6 Final Actions.

Continue with the procedure.

Remove and inspect the Transfer Roller for contamination or excessive wear, and check the electrical contacts. **The Transfer Roller is good.**

Y N

Replace the Transfer Roller, REP 19.2.11.

Check for obstructions between the LED arrays and Drum Cartridges. **The LED paths are clear.**

Y N

Clear the LED paths of obstructions.

Contact Xerox Technical Support.

IQ4 Unfused Image

The printed image is not fully fused to the paper (Figure 1). The image rubs off easily. A cold environment affects the warm-up time, while high humidity has an adverse effect on fusing. Also, media weight and composition affect fusing performance.

WARNING

Switch off the electricity to the machine. Disconnect the power cord from the customer supply while performing tasks that do not need electricity. Electricity can cause death or injury. Moving parts can cause injury.

WARNING

Do not touch the Fuser while it is hot.

Initial Actions

After each action, print a test page to check if image quality improves.

- Check the environment. A location that's too cold or humid reduces fusing performance.
- Verify that the media type is set correctly.
- Verify that the toner cartridge(s) of the affected color(s) is genuine Xerox Toner.
- Increase the Fuser temperature setting; see General Procedures section TBD.

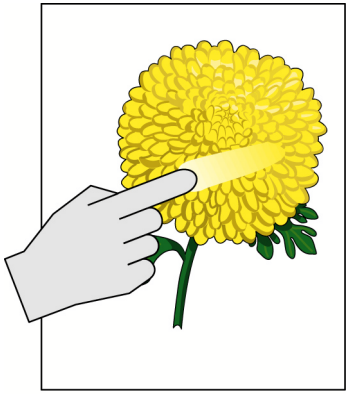

Unfused Image

Figure 1 Unfused Image Example

Procedure

Rub the image with a soft cloth or tissue. **The image smears.**

Y N

Task is complete. Perform SCP 6 Final Actions.

Replace the media with new, dry media from an unopened ream. Run a test print. **The image smears.**

Y N

Increase Fuser temperature and re-run test print on good media. **The image smears.**

Y N

Task is complete. Perform SCP 6 Final Actions.

A B

A B

Discuss machine limitations with the customer, and perform SCP 6 Final Actions.

Remove and inspect the Fuser rollers. **The Fuser rollers are good.**

Y N

Replace the Fuser, REP 7.1.1.

Check the Fuser electrical connections. **The connections are good.**

Y N

Replace the Fuser harness.

Replace the Fuser, REP 7.1.1.

IQ5 Random Spots

There are spots of toner randomly scattered on the page (Figure 1).

WARNING

Switch off the electricity to the machine. Disconnect the power cord from the customer supply while performing tasks that do not need electricity. Electricity can cause death or injury. Moving parts can cause injury.

WARNING

Do not touch the Fuser while it is hot.

Initial Actions

- Check that the paper is clean, dry, and meets specifications.
- If using recycled paper, it may have spots.
- Inspect the paper path for items, such as staples, paper clips, and paper scraps.
- Check if the defects repeat at regular intervals. If so, see IQ9 Cyclic Dots/Lines.
- Check the Drum Cartridges surfaces for spots or contamination.
- Check that the Drum Cartridge contacts are clean.

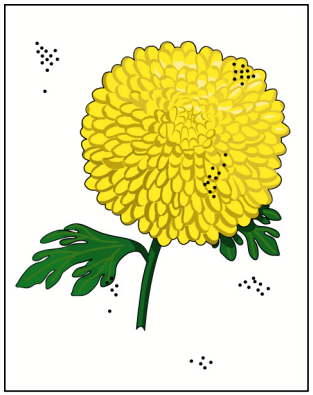

Random Spots

Figure 1 Random Spots Example

Procedure

Check the media path for dirt debris or toner residue. **The media path is clean.**

Y N

Clean the media path using GP 33.

Print 50% YMCKRGB test print (TBD for test print choice). **The image contains spots in all colors.**

Y N

Replace the Drum Cartridge for the affected color, REP 8.1.1, and re-run the test print. **The defect persists.**

Y N

Task is complete. Perform SCP 6 Final Actions.

A B

A B

Continue with the procedure.

Remove Transfer Belt Unit, REP 6.1.1, and check for surface contamination and wear. **The Transfer Belt is good.**

Y N

Replace the Transfer Belt Unit, REP 6.1.1.

Check if the spots are only on the back side of a single sided print. **The back side is clear of spots.**

Y N

Remove the Transfer Roller and check for surface contamination and wear. **The roller is good.**

Y N

Replace the Transfer Roller, REP 19.2.11 (MFP), REP 19.4.11 (SFP).

Continue with the procedure.

Check the Fuser rollers for damage or debris. **The Fuser rollers are good.**

Y N

Replace the Fuser, REP 7.1.1.

Replace the Transfer Roller REP 19.2.11 (MFP), REP 19.4.11 (SFP); Transfer Belt Unit, REP 6.1.1; and/or Fuser REP 7.1.1 until the defect goes away.

IQ6 Bead Carry-Out

Media has gritty texture (Figure 1).

Initial Actions

After each action, print a test page to check if image quality improves.

- Check if the printer contains Genuine Xerox Toner Cartridges and parts.
- Check that the paper is clean, dry, and meets specifications.
- Check CRU life counts. Replace components at end of life.

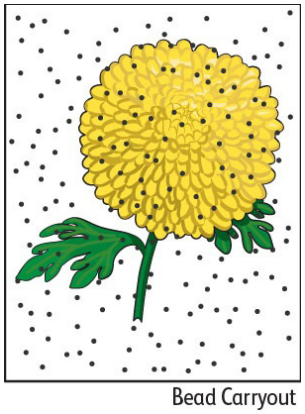

Figure 1 Bead Carry-Out Example

Procedure

Check the altitude of the printer installation. **Printer is located within specified altitude limits.**

Y N

Relocate the printer to be within the specified altitude limits. Perform SCP 6 Final Actions.

Replace all four Drum Cartridges, REP 8.1.1. **The defect persists.**

Y N

Task is complete. Perform SCP 6 Final Actions.

Call Xerox Technical Support.

IQ7 Horizontal Banding

Low density or blurred image horizontally, voids, or streaks (Figure 1, Figure 2).

WARNING

Switch off the electricity to the machine. Disconnect the power cord from the customer supply while performing tasks that do not need electricity. Electricity can cause death or injury. Moving parts can cause injury.

WARNING

Do not touch the Fuser while it is hot.

Initial Actions

After each action, print a test page to check if image quality improves.

- Check that the paper is clean, dry, and meets specifications.
- Check CRU life counts. Replace components at end of life.

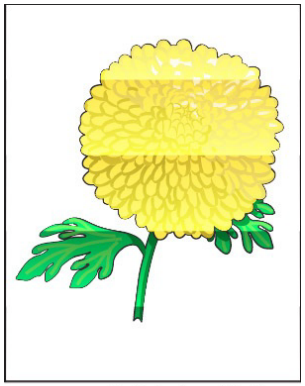

Light Induced Fatigue

Figure 1 Light-Induced Fatigue Example

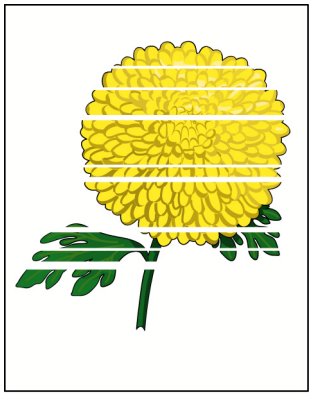

Horizontal Band, Void, or Streaks

Figure 2 Horizontal Bands, Voids, or Streaks Example

Procedure

Print the Repeating Defects test print. **The customer banding defect does not match a component on the Repeating Pattern print?**

Y **N**

Replace the component(s) matching the test print defect, then re-run the test print. **The defect persists.**

Y **N**

Task is complete. Perform SCP 6 Final Actions.

Continue the procedure.

Review the C,M,G,K prints from the repeating defects page. **The banding affects all colors.**

Y **N**

Replace the Drum Cartridge (REP 8.1.1) of the affected color and re-run the test print. **The defect persists.**

Y **N**

Task is complete. Perform SCP 6 Final Actions.

Continue with procedure.

Remove the Transfer Roller, REP 19.2.11 (MFP), REP 19.4.11 (SFP); check for surface contamination and wear. **The Transfer Roller is good.**

Y **N**

Replace the Transfer Roller, REP 19.2.11 (MFP), REP 19.4.11 (SFP).

Check the Fuser rollers for damage or debris. **The Fuser rollers are good.**

Y **N**

Replace the Fuser, REP 7.1.1.

Remove the Transfer Belt Unit (REP 6.1.1) and check for surface contamination and wear. **The Transfer Belt Unit is good.**

Y N

Replace the Transfer Belt Unit, REP 6.1.1.

Replace the Transfer Roller REP 19.2.11 (MFP), REP 19.4.11 (SFP); Transfer Belt Unit, REP 6.1.1; and/or Fuser REP 7.1.1 until the defect goes away.

IQ8 Vertical Lines / Streaks

Extraneous dark lines/bands in the process direction (Figure 1).

WARNING

Switch off the electricity to the machine. Disconnect the power cord from the customer supply while performing tasks that do not need electricity. Electricity can cause death or injury. Moving parts can cause injury.

WARNING

Do not touch the Fuser while it is hot.

Initial Actions

After each action, print a test page to check if image quality improves.

- Check that the paper supply is dry and meets specifications.
- Inspect the paper path for items, such as staples, paper clips, paper scraps, and contamination.
- Clean the LED Print Heads (LPH) using the LPH Cleaning wand.

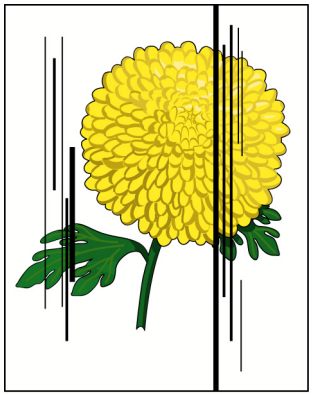

Vertical Stripes

Figure 1 Vertical Steaks Example

Procedure

Test the error mode by making a print and a copy from both the platen and DADF. **The defect occurs only on a copy.**

Y N

Replace the drum cartridge of the color that most closely resembles the streak. Perform this sequentially until all 4 drum cartridges have been replaced (if necessary). **The defect persists.**

Y N

Task is complete. Perform SCP 6 Final Actions.

Inspect the Transfer Belt Unit for damage or matching streaks on the belt. **The Transfer Belt Unit is good.**

A

A

Y N

Replace the Transfer Belt Unit, REP 6.1.1, and perform SCP 6 Final Actions.

Call Xerox Technical Support.

Check if the copy original has any streaks. **The original is good.**

Y N

Replace the original.

Clean the scanner platen and scan bars using the procedure described in GP 34. Perform SCP 6 Final Actions.

IQ9 Cyclic Dots / Line

Color or black dots or line in the vertical direction (Figure 1).

WARNING

Switch off the electricity to the machine. Disconnect the power cord from the customer supply while performing tasks that do not need electricity. Electricity can cause death or injury. Moving parts can cause injury.

WARNING

Do not touch the Fuser while it is hot.

Initial Actions

After each action, print a test page to check if image quality improves.

- Check that the paper is clean, dry, and meets specifications.
- Check CRU life counts. Replace components at end of life.

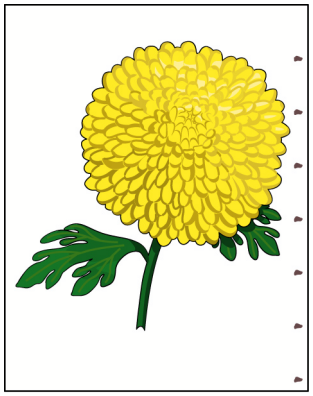

Repeating Defect, Developer Roller

Figure 1 Cyclic Dot/Line Example

Procedure

Print the Repeating Defects test print. **The customer defect does not match a component on the Repeating Pattern print?**

Y N

Replace the component(s) matching the test print defect, then re-run the test print. **The defect persists.**

Y N

Task is complete. Perform SCP 6 Final Actions.

Continue the procedure.

Review the C,M,G,K prints from the repeating defects page. **The defect affects all colors.**

Y N

Replace the Drum Cartridge (REP 8.1.1) of the affected color and re-run the test print. **The defect persists.**

A

A

Y N

Task is complete. Perform SCP 6 Final Actions.

Continue with the procedure.

Remove the Transfer Roller, REP 19.2.11 (MFP), REP 19.4.11 (SFP); check for surface contamination and wear. **The Transfer Roller is good.**

Y N

Replace the Transfer Roller, REP 19.2.11 (MFP), REP 19.4.11 (SFP).

Check the Fuser rollers for damage or debris. **The Fuser rollers are good.**

Y N

Replace the Fuser, REP 7.1.1.

Remove the Transfer Belt Unit (REP 6.1.1) and check for surface contamination and wear. **The Transfer Belt Unit is good.**

Y N

Replace the Transfer Belt Unit, REP 6.1.1.

Replace the Transfer Roller REP 19.2.11 (MFP), REP 19.4.11 (SFP); Transfer Belt Unit, REP 6.1.1; and/or Fuser REP 7.1.1 until the defect goes away.

IQ10 Vertical Deletions

Areas of image (lines or bands) appear as vertical blanks or deletions (Figure 1).

WARNING

Switch off the electricity to the machine. Disconnect the power cord from the customer supply while performing tasks that do not need electricity. Electricity can cause death or injury. Moving parts can cause injury.

WARNING

Do not touch the Fuser while it is hot.

Initial Actions

After each action, print a test page to check if image quality improves.

- Check that the paper supply is dry and meets specifications.
- Inspect the paper path for items, such as staples, paper clips, and paper scraps.
- Check that rollers and other media path components are clean and unobstructed.
- Clean the LED Print Heads (LPH) using the LPH Cleaning wand.

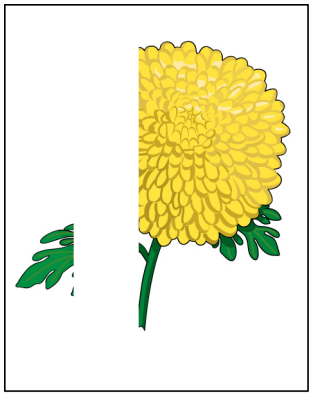

Vertical White Band

Figure 1 Vertical Blank Deletions (Line or Streak) Example

Procedure

Print the repeating defects test print. Look only at the solid areas, not at the map area. **The defect affects all colors.**

Y N

Replace the Drum Cartridge (REP 8.1.1) of the affected color and re-run the test print. **The defect persists.**

Y N

Task is complete. Perform SCP 6 Final Actions.

Remove the affected Drum Cartridge and inspect the LED array on the related LPH for debris and contamination. **The LED array is clean.**

Y N

Clean or replace the affected LPH, REP 2.1.1.

A B

A B

Continue with the procedure.

Remove the Transfer Roller (REP 19.2.11 (MFP), REP 19.4.11 (SFP)) and check for surface contamination and wear. **The Transfer Roller is clean and operates correctly.**

Y N

Replace the Transfer Roller, REP 19.2.11 (MFP), REP 19.4.11 (SFP).

Remove the Transfer Belt Unit and check for surface contamination and wear. **The Transfer Belt Unit is clean and undamaged, and works correctly.**

Y N

Replace the Transfer Belt Unit, REP 6.1.1.

Call Xerox Technical Support.

IQ11 Diagonal Banding (Auger Marks)

Auger marks appear across output (Figure 1).

WARNING

Switch off the electricity to the machine. Disconnect the power cord from the customer supply while performing tasks that do not need electricity. Electricity can cause death or injury. Moving parts can cause injury.

WARNING

Do not touch the Fuser while it is hot.

Initial Actions

After each action, print a test page to check if image quality improves.

- Check that the paper is clean, dry, and meets specifications.
- Check CRU life counts. Replace components at end of life.
- Check if the printer contains Genuine Xerox Toner Cartridges and parts.

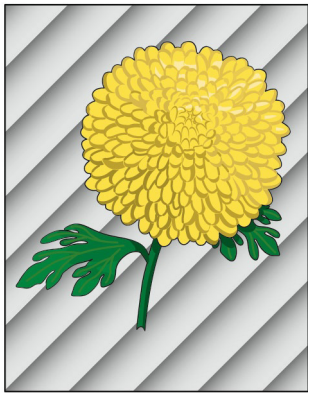

TS Augermark

Figure 1 Diagonal Banding (Auger Marks) Example

Procedure

Discuss printing behavior with the customer. **The customer is printing a lot of continuous high-area coverage prints.**

Y N

Replace the Drum Cartridge (REP 8.1.1) of the color that most closely matches the defect. Continue replacing each of the Drum Cartridges sequentially for the other colors as needed until the defect is fixed.

Discuss printer limitations (Run Pro-con / print XXX low coverage pages to recover (TBD)).

IQ12 Uneven Density

Uneven density, mottled image or text (Figure 1).

WARNING

Switch off the electricity to the machine. Disconnect the power cord from the customer supply while performing tasks that do not need electricity. Electricity can cause death or injury. Moving parts can cause injury.

WARNING

Do not touch the Fuser while it is hot.

Initial Actions

After each action, print a test page to check if image quality improves.

- Clean the LED Print Head (LPH).
- Clean the Color Toner Density (CTD) Sensor.
- Check if the Toner Cartridges are Genuine Xerox.If they are not, replace the cartridges by following the procedure in GP 35.
- Check the paper is the correct type and that the condition is not mutilated or damp.

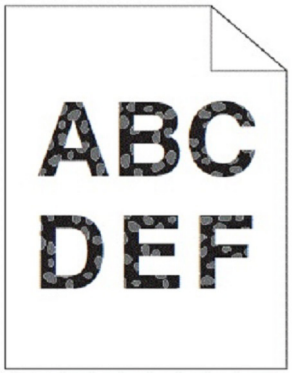

Figure 1 Uneven Density Example

Procedure

Repeat customer job with fresh ream of media. **The defect persists.**

Y **N**

Discuss the printer limitations with the customer. Perform SCP 6 Final Actions.

Adjust the Bias Transfer Voltage up and down. (TBD: Reference the procedure for SFP/MFP when available.) **The defect persists.**

Y **N**

Task is complete. Perform SCP 6 Final Actions.

Call Xerox Technical Support.

IQ13 Ghosting

The image from a previous print appears on the current print (Figure 1).

WARNING

Switch off the electricity to the machine. Disconnect the power cord from the customer supply while performing tasks that do not need electricity. Electricity can cause death or injury. Moving parts can cause injury.

WARNING

Do not touch the Fuser while it is hot.

Initial Actions

After each action, print a test page to check if image quality improves.

- Confirm that the printer is set to the correct media type (plain, heavyweight, etc.).
- Inspect the paper path for items, such as staples, paper clips, and paper scraps.
- Check that the Fuser is seated properly.
- Verify the paper is within specifications.

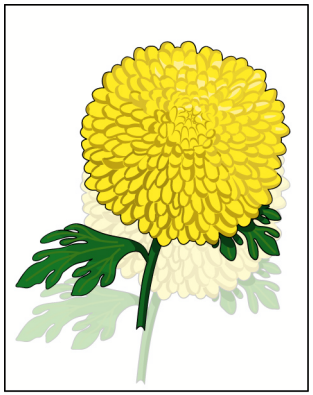

Residual Image/Ghosting

Figure 1 Ghosting Example

Procedure

Print the Repeating Defects Test Print. **The customer's repeating defect matches a component on the Repeating Defects Test Print.**

Y **N**

Review the solid fill prints from the Repeating Defects Test Print. **The defect affects all colors.**

Y **N**

Replace the drum cartridge of the affected color. **The defect persists.**

Y **N**

Task is complete. Perform SCP 6 Final Actions.

Continue with the procedure.

A B

A B

Remove the Transfer Roller, REP 19.2.11 (MFP), REP 19.4.11 (SFP), and check for surface contamination and wear. **The Transfer Roller is good.**

Y N

Replace the Transfer Roller, REP 19.2.11 (MFP), REP 19.4.11 (SFP). **The defect persists.**

Y N

Task is complete. Perform SCP 6 Final Actions.

Continue with the procedure.

Remove the Fuser, REP 7.1.1, and check for damage, debris, and good rollers. **The Fuser has no damage, is clean, and rollers are good.**

Y N

Replace the Fuser, REP 7.1.1. **The defect persists.**

Y N

Task is complete. Perform SCP 6 Final Actions.

Continue with the procedure.

Remove the Transfer Belt Unit, REP 6.1.1 and check for surface contamination and wear. **The Transfer Belt Unit is good.**

Y N

Replace the Transfer Belt Unit, REP 6.1.1. **The defect persists.**

Y N

Task is complete. Perform SCP 6 Final Actions.

Replace the Transfer Roller, REP 19.2.11 (MFP), REP 19.4.11 (SFP); Transfer Belt Unit, REP 6.1.1; or Fuser, REP 7.1.1 until the defect is fixed.

Continue with the procedure.

Select the test print component that matches the customer defect. **The defect matches the Fuser Component on the test print.**

Y N

Select the test print component that matches the customer defect. **The customer defect matches the Transfer Roller Component.**

Y N

Replace the Drum Cartridge of the affected color.

Adjust the Transfer Voltage (TBD: see General Procedures). **The defect persists.**

Y N

Task is complete. Perform SCP 6 Final Actions.

Replace the Transfer Roller, REP 19.2.11 (MFP), REP 19.4.11 (SFP).

Adjust the Fuser Temperature (TBD: see General Procedures). **The defect persists.**

Y N

Task is complete. Perform SCP 6 Final Actions.

Replace the Fuser, REP 7.1.1.

IQ14 High Background on Prints

There is toner contamination on all or part of the page (Figure 1). The contamination appears as a very light single or multi-color dusting or fog on prints and copies.

NOTE: *If the defect occurs when making copies or scanning documents, and not when printing files, adjust the White Reference Calibration (see dc945).*

WARNING

Switch off the electricity to the machine. Disconnect the power cord from the customer supply while performing tasks that do not need electricity. Electricity can cause death or injury. Moving parts can cause injury.

WARNING

Do not touch the Fuser while it is hot.

Initial Actions

After each action, print a test page to check if image quality improves.

- Check media type settings are correct.
- Some glossy media or photo paper will exhibit high background. If the issue only occurs on a particular media, try a different brand.
- Check that the paper is clean, dry, and meets specifications.
- Verify the Toner Cartridge is a Xerox manufactured part with adequate life remaining. If a non-Xerox Toner Cartridge is being used, this could be the problem.
- Ensure covers are in place and no outside light enters the printer.
- Clean the CTD sensors.

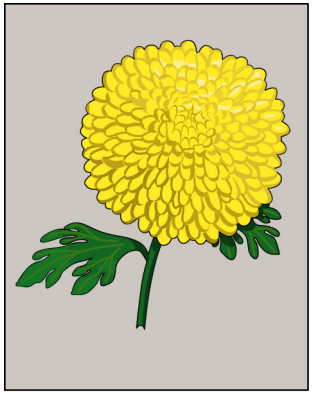

Background Contamination

Figure 1 High Background Contamination Example

Procedure

Check the paper condition. Load new, dry recommended paper, and print a test print. **The image includes background defects.**

Y N

Perform SCP 6 Final Actions.

A

A

If the background is in only one color, remove the Drum Cartridge (REP 8.1.1), clean the electrical contacts, then print a test print. **The image includes background defects.**

Y N

Perform SCP 6 Final Actions.

Replace the Drum Cartridge (REP 8.1.1) of the affected color and reprint the test print. **The image includes background defects.**

Y N

Perform SCP 6 Final Actions.

Remove and examine the Transfer Belt Unit (REP 6.1.1) for surface contamination or excessive wear. **The Transfer Belt Unit is good.**

Y N

Replace the Transfer Belt Unit, REP 6.1.1.

Replace all four Drum Cartridges, REP 8.1.1.

IQ15 Fuzzy/Blurry Text and Image

Text in image is fuzzy or blurry along the edges (Figure 1).

WARNING

Switch off the electricity to the machine. Disconnect the power cord from the customer supply while performing tasks that do not need electricity. Electricity can cause death or injury. Moving parts can cause injury.

WARNING

Do not touch the Fuser while it is hot.

Initial Actions

After each action, print a test page to check if image quality improves.

- Check that the paper is clean, dry, and meets specifications.
- Check CRU life counts. Replace components at end of life.
- Clean the LED Print Head (LPH).

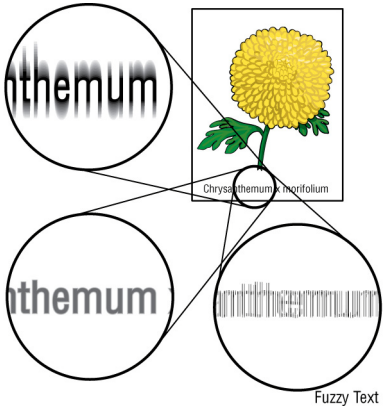

Figure 1 Fuzzy/Blurry Text and Image Example

Procedure

On the Printer Options tab, set Print Quality to Enhanced. **The problem persists.**

Y N

Task complete. Perform SCP 6 Final Actions.

If using a downloaded font, ensure that the font is recommended for the printer, operating system, and the application being used. **The problem persists.**

Y N

Task complete. Perform SCP 6 Final Actions.

Check if the defect is only on black output (not color). **The problem is only on black output.**

Y N

See Image Quality section IQ20.

Tell customer the defect is a printer limitation. Perform SCP 6 Final Actions.

IQ16 Wrinkled or Creased

The paper comes out either wrinkled, creased, stained, or torn (Figure 1).

WARNING

Switch off the electricity to the machine. Disconnect the power cord from the customer supply while performing tasks that do not need electricity. Electricity can cause death or injury. Moving parts can cause injury.

WARNING

Do not touch the Fuser while it is hot.

Initial Actions

After each action, print a test page to check if image quality improves.

- Check that the paper is clean, dry, and meets specifications.
- Inspect the paper path for items, such as staples, paper clips, and paper scraps.
- Check CRU life counts. Replace components at end of life.
- Check the paper tray guides so they are positioned against the paper correctly.

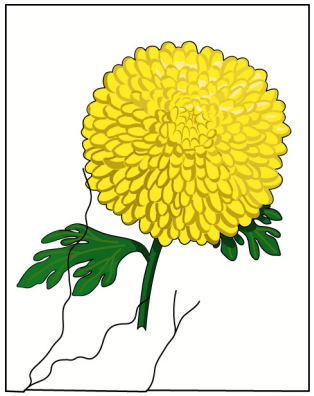

Wrinkling

Figure 1 Wrinkled or Creased Example

Procedure

Using fresh media, check if problem occurs on paper sheets or on envelopes. **Problem occurs on paper sheets.**

Y N

Check the location of wrinkles on the envelope. **Wrinkles are about 30mm or more from the four edges of the envelope.**

Y N

This type of wrinkle is considered normal. Your printer is not at fault.

Reload the envelopes in the Bypass Tray properly. **The problem persists.**

Y N

The task is complete.

A B

A B

Continue with the procedure.

Print the Repeating Defects Test Print on the problem media. Referring to the solid fill pages, determine if toner is inside the creases or not. **The toner is inside the creases.**

Y N

Replace Transfer Roller; REP 19.2.11 (MFP), REP 19.4.11 (SFP). Repeat the Repeating Defects Test Print. **The problem persists.**

Y N

Task is complete. Perform SCP 6 Final Actions.

Replace the Transfer Belt Unit, REP 6.1.1. Repeat the Repeating Defects Test Print. **The defect persists.**

Y N

Task is complete. Perform SCP 6 Final Actions.

Continue with the procedure.

Replace the Fuser, REP 7.1.1.

IQ17 Leading Edge Paper Damage

The page exits with the leading edge damaged (Figure 1).

WARNING

Switch off the electricity to the machine. Disconnect the power cord from the customer supply while performing tasks that do not need electricity. Electricity can cause death or injury. Moving parts can cause injury.

Initial Actions

After each action, print a test page to check if image quality improves.

- Check that the paper is clean, dry, and meets specifications.
- Inspect the paper path for items, such as staples, paper clips, and paper scraps.
- Check CRU life counts. Replace components at end of life.

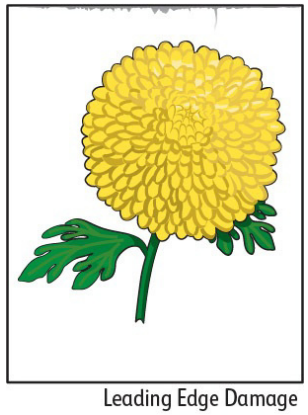

Figure 1 Leading Edge Paper Damage Example

Procedure

Check if damage occurs when using the Bypass Tray or with other tray. **The problem does not occur when using the Bypass Tray.**

Y N

Reverse the paper in the Bypass Tray and try again. **The problem persists.**

Y N

The task is complete

Insert a different sheet of paper in the Bypass Tray and try again. **The problem persists.**

Y N

The task is complete.

Use another tray in place of the Bypass Tray. **The problem persists.**

Y N

The task is complete.

Go to the next action.

A

Reload the paper loaded in the paper cassette by removing the cassette, adjusting the paper guides, and reloading the paper properly. Reinstall the cassette and perform a test print. **The problem persists.**

Y N

The task is complete.

Check the paper humidity conditioning effect by loading recommended paper from unopened package or that has been sealed and stored under humidity control. Perform a test print. **The problem persists.**

Y N

The task is complete.

Check the paper type setting. **Does the paper type setting correspond with the paper printed?**

Y N

Set the correct paper type.

Check the paper transfer path. **The path is clear of any dirt or foreign substances on the paper transfer path.**

Y N

Remove the foreign substances.

Check the paper feed path roller. **The roller on the paper feed path is not dirty, damaged, or worn; it works correctly; and it is installed correctly.**

Y N

Clean or replace the corresponding roller, and reinstall it.

Check the installation status of the Transfer Roller. **The Transfer Roller is installed correctly.**

Y N

Reinstall Transfer Roller; REP 19.2.11 (MFP), REP 19.4.11 (SFP). Repeat.

WARNING

Do not touch the Fuser while it is hot.

Check the Fuser Assembly installation. **The Fuser Assembly is installed correctly.**

Y N

Reinstall the Fuser, REP 7.1.1.

Check the Fuser Assembly.

Remove the Fuser Assembly, turn the gear by hand, and examine the Heat Roll section **The Heat Roll section is not dirty nor damaged, and it works correctly.**

Y N

Replace the Fuser, REP 7.1.1.

Contact Xerox Technical Support.

A

IQ18 Incorrect Image Position or Margins

Image prints in wrong position or outside the page margins (Figure 1).

WARNING

Switch off the electricity to the machine. Disconnect the power cord from the customer supply while performing tasks that do not need electricity. Electricity can cause death or injury. Moving parts can cause injury.

Initial Actions

After each action, print a test page to check if image quality improves.

- Check that the paper is clean, dry, and meets specifications.
- Inspect the paper path for items, such as staples, paper clips, and paper scraps.
- Check CRU life counts. Replace components at end of life.

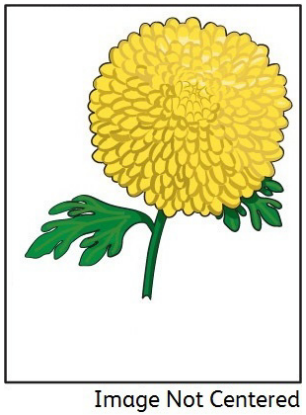

Figure 1 Incorrect Position or Margins Example

Procedure

Compare the customer image size to the media size used for printing. **The image size fits the media size.**

Y N

Adjust image size or use larger media.

Check paper guide positions; ensure they are snug. **Paper guides are in good position.**

Y N

Adjust paper guides. **The defect persists.**

Y N

Task is complete. Perform SCP 6 Final Actions.

Continue the procedure.

Perform Image Position Adjustment (TBD: See Image Position Adjustment in General Procedures). Note that this procedure has separate adjustments for side 1 and side 2.

IQ19 Images are Skewed

Images in the output are not parallel to the edge of the printed sheet (Figure 1).

WARNING

Switch off the electricity to the machine. Disconnect the power cord from the customer supply while performing tasks that do not need electricity. Electricity can cause death or injury. Moving parts can cause injury.

WARNING

Do not touch the Fuser while it is hot.

Initial Actions

After each action, print a test page to check if image quality improves.

- Check that the paper is clean, dry, and meets specifications.
- Inspect the paper path for items, such as staples, paper clips, and paper scraps.
- Check CRU life counts. Replace components at end of life.

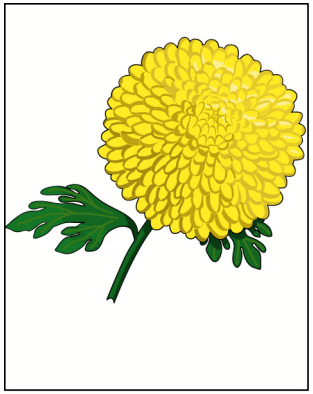

Figure 1 Skewed Image Example

Procedure

Adjust the paper guides properly. **The problem persists.**

Y N

Task complete. Perform SCP 6 Final Actions

Check the paper feed path roller. **The roller on the paper feed path is not dirty, damaged, or worn; it works correctly; and it is installed correctly.**

Y N

Clean or replace the corresponding roller, and reinstall it

Install the Transfer Belt Unit, REP 6.1.1. **The problem persists.**

Y N

Task complete. Perform SCP 6 Final Actions.

A

A

Check the paper humidity conditioning effect by loading recommended paper from unopened package or that has been sealed and stored under humidity control. Perform a test print. **The problem persists.**

Y N

The task is complete. Perform SCP 6 Final Actions.

Check the paper type setting. **The paper type setting corresponds with the paper printed.**

Y N

Set the correct paper type.

Check the paper transfer path. **There is no dirt or foreign substances on the paper transfer path between the paper entrance and the paper exit.**

Y N

Remove the foreign substance.

Check the installation status of the Transfer Roller. **The Transfer Roller is installed correctly.**

Y N

Reinstall the Transfer Roller; REP 19.2.11 (MFP), REP 19.4.11 (SFP).

Check the installation status of the Fuser Assembly. **The Fuser Assembly is installed correctly.**

Y N

Reinstall the Fuser, REP 7.1.1.

Contact Xerox Technical Support.

IQ20 Color Registration is out of Alignment

Image colors are not aligned with each other (Figure 1).

WARNING

Switch off the electricity to the machine. Disconnect the power cord from the customer supply while performing tasks that do not need electricity. Electricity can cause death or injury. Moving parts can cause injury.

WARNING

Do not touch the Fuser while it is hot.

Initial Actions

After each action, print a test page to check if image quality improves.

- Clean the Color Toner Density (CTD) Sensor.
- Clean the LED Print Head (LPH).
- Check that the paper is clean, dry, and meets specifications.
- Inspect the paper path for items, such as staples, paper clips, and paper scraps.
- Check CRU life counts. Replace components at end of life.

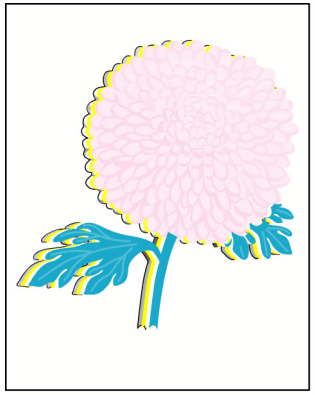

Color Registration

Figure 1 Color Registration Misalignment Example

Procedure

Perform the Automatic Color Registration Adjustment (TBD: see Color Registration in General Procedures). **The problem persists.**

Y N

The task is complete. Perform SCP 6 Final Actions.

Review the repair activities used in the current service call. **The LED Print Head Arrays (LPH) or the FFC cables connecting the LPH Arrays to the ESS Board have been removed and replaced.**

Y N

Replace the printer.

A

A

Check the installation of the LPH Arrays. **The LPH Arrays are installed correctly.**

Y **N**

Correct any problems with the installation of the LPH Arrays.

Check the installation of the FFC cables connecting the LPH Arrays to the ESS Board. **The FFC cables are installed correctly.**

Y **N**

Correct any problems with the installation of the FFC cables.

Replace the printer.

4 Repair Procedures

REP 1.1.1 UI Console Assembly (Control Panel) (MFP) 4-3
REP 1.1.2 UI Inner Cover (MFP) 4-4
REP 1.1.5 UI Harness (MFP) 4-4
REP 1.1.7 UI Access Door (MFP) 4-6
REP 1.1.99 UI Frame Assembly (MFP) 4-6
REP 1.2.1 UI Console Assembly (SFP) 4-7
REP 1.2.2 UI Harness (SFP) 4-8
REP 2.1.1 LPH Color Head Assembly 4-8
REP 2.1.11 Guide Cover Assembly 4-10
REP 2.1.99 LPH Xerographic CRUM FFC Kit 4-10
REP 3.1.1 Main Drive Assembly 4-14
REP 3.1.2 Paper Handling (PH) Drive Assembly 4-20
REP 3.1.3 Bypass (MSI) Drive Assembly 4-21
REP 3.1.4 Waste Drive Assembly 4-23
REP 4.1.1 Main Fan 4-23
REP 4.1.2 Main Fan Duct 4-24
REP 4.1.99 Foot Assembly Kit 4-24
REP 5.1.2 Dispenser Assemblies Y, M, C, K 4-25
REP 5.1.9 Toner Full Sensor 4-26
REP 5.1.99 Dispenser Drive Assembly Kit 4-27
REP 6.1.1 Transfer Belt Unit 4-28
REP 6.1.8 Color Toner Density (CTD) Sensor Assembly 4-30
REP 6.1.11 Photo Sensor (K-Mode) 4-31
REP 7.1.1 Fuser Assembly 4-32
REP 7.1.2 Fuser Harness Cover 4-33
REP 8.1.1 Drum Cartridge Y, M, C, K CRU 4-34
REP 8.1.5 Waste Cartridge Assembly 4-34
REP 8.1.6 LPH Cleaner Assembly 4-35
REP 9.1.1 IOT 250 Cassette Assembly 4-35
REP 9.1.11 Legal Paper Tray Cover 4-36
REP 9.1.98 Cassette Separator Rollers Kit 4-36
REP 10.1.1 550 Option Feeder Assembly Kit 4-37
REP 10.1.2 550 Option Feeder Left Side Cover 4-38
REP 10.1.10 550 OPF Foot 4-40
REP 10.1.98 LED Harness Assembly Kit 4-41
REP 10.2.8 No Paper Actuator (Optional Feeder) 4-42
REP 10.2.99 Feed Roller Assembly Kit (Optional Feeder) 4-43
REP 10.3.1 550 Option Cassette Assembly 4-44
REP 10.3.2 Cassette Separator Holder Assembly (Option Feeder) 4-45
REP 10.3.7 Legal Paper Tray Cover 4-45
REP 10.3.98 Cassette Separator Roller Kit 4-46
REP 13.1.1 Bypass Tray Frame Assembly 4-47
REP 13.1.5 Bypass Tray Feed Roller 4-47
REP 13.1.8 Bypass Tray No Paper Sensor 4-48
REP 13.1.98 Bypass Tray TA1 Roller Assembly Kit 4-49
REP 13.1.99 Bypass Tray TA2 Roller Assembly Kit 4-50
REP 13.2.1 Main Bypass Tray Assembly 4-53
REP 13.2.5 Bypass Tray Separator Holder Assembly 4-54
REP 15.1.1 Option Registration Chute 4-54
REP 15.1.99 Duplex Registration Roller Assembly Kit 4-55
REP 15.2.1 Registration Chute Feeder Assembly 4-56
REP 15.2.2 No Paper Actuator (Registration) 4-58
REP 15.2.11 Registration Actuator 4-59
REP 15.2.13 Registration Photo Sensor 4-59
REP 15.2.17 Upper Feed Chute 4-60
REP 17.1.1 Exit Chute Assembly 4-60
REP 17.1.4 Main Exit Drive Assembly 4-61
REP 17.1.5 Exit Idle Gear Assembly 4-62
REP 18.1.1 MCU Board (MFP) 4-62
REP 18.1.2 ESS MCU FFC (MFP) 4-63
REP 18.1.5 ESS Board (MFP) 4-64
REP 18.1.9 FAX Board (MFP only) 4-66
REP 18.1.11 Wireless Module (MFP) 4-66
REP 18.1.14 Front USB Harness Assembly (MFP) 4-67
REP 18.1.16 LVPS Board (MFP) 4-68
REP 18.1.18 ESS Top Plate (MFP) 4-69
REP 18.1.19 ESS Box (MFP) 4-70
REP 18.1.20 LVPS Plate (MFP) 4-70
REP 18.1.21 MCU Plate (MFP) 4-71
REP 18.2.1 HVPS Board and Guide Assembly (MFP) 4-72
REP 18.2.3 HVPS Toner Cover (MFP) 4-73
REP 18.2.99 Second Bias Transfer Roll Housing Kit (MFP) 4-74
REP 18.3.1 Inlet Harness Assembly Kit (MFP) 4-74
REP 18.3.4 Rear Interlock Harness Assembly (MFP) 4-75
REP 18.3.5 Side Interlock Harness Assembly (MFP) 4-76
REP 18.3.6 OPF Harness Assembly (MFP) 4-78
REP 18.5.1 MCU Board (SFP) 4-79
REP 18.5.2 ESS MCU FFC (SFP) 4-80
REP 18.5.5 ESS Board (SFP) 4-81
REP 18.5.11 Wireless Module (SFP) 4-82
REP 18.5.16 LVPS Board (SFP) 4-83
REP 18.5.18 ESS Top Plate (SFP) 4-83
REP 18.5.19 ESS Box (SFP) 4-84
REP 18.5.20 LVPS Plate (SFP) 4-85
REP 18.5.21 MCU Plate (SFP) 4-85
REP 18.6.1 HVPS Guide Assembly (SFP) 4-86
REP 18.6.3 HVPS Toner Cover (SFP) 4-88
REP 18.6.99 Second Bias Transfer Roll Housing Kit (SFP) 4-88
REP 18.7.1 Inlet Harness Assembly Kit (SFP) 4-89
REP 18.7.4 Rear Interlock Harness Assembly (SFP) 4-90
REP 18.7.5 Side Interlock Harness Assembly (SFP) 4-90
REP 18.7.6 OPF Harness Assembly (SFP) 4-91
REP 19.1.5 Front Inner Cover (MFP) 4-92
REP 19.1.22 Left Side Front Cover (MFP) 4-93
REP 19.1.23 Right Side Front Cover (MFP) 4-93
REP 19.1.96 Toner Cover Assembly (MFP) 4-94

REP 19.1.97 Right Side Cover Assembly (MFP) 4-94
REP 19.1.99 Top Cover Assembly (MFP) 4-95
REP 19.2.1 Left Side Cover (MFP) 4-96
REP 19.2.4 Left Side IIT Cover (MFP) 4-97
REP 19.2.11 Second BiasTransfer Roller Assembly (MFP) 4-98
REP 19.2.16 WIFI Cap (MFP) 4-98
REP 19.2.98 ESS Window Assembly Kit (MFP) 4-99
REP 19.2.99 Rear Cover Assembly Kit (MFP) 4-99
REP 19.3.5 Front Inner Cover (SFP) 4-100
REP 19.3.22 Left Side Front Cover (SFP) 4-101
REP 19.3.23 Right Side Front Cover (SFP) 4-101
REP 19.3.24 Left Rear Top Cover (SFP) 4-102
REP 19.3.25 Right Rear Top Cover (SFP) 4-102
REP 19.3.96 Toner Cover Assembly (SFP) 4-103
REP 19.3.97 Right Side Cover Assembly (SFP) 4-103
REP 19.3.99 Top Cover Assembly (SFP) 4-104
REP 19.4.1 Left Side Cover (SFP) 4-105
REP 19.4.11 Second Bias Transfer Roller Assembly (SFP) 4-106
REP 19.4.16 WIFI Cap (SFP) 4-107
REP 19.4.98 ESS Window Assembly Kit (SFP) 4-107
REP 19.4.99 Rear Cover Assembly Kit (SFP) 4-108
REP 50.1.1 DADF Assembly 4-109
REP 50.1.2 IIT Assembly 4-110
REP 50.1.3 Left and Right Counterbalance Assemblies (Hinges) 4-110
REP 50.1.11 DADF Tray Assembly 4-111
REP 50.1.13 Scanner Assembly 4-111
REP 50.1.14 DADF Actuator 4-112
REP 50.1.99 DADF Feed Roller Kit 4-113

REP 1.1.1 UI Console Assembly (Control Panel) (MFP)

Parts List on PL 1.1 Item 1

Removal

CAUTION

1. Before starting removal, print a configuration page and verify the FW version.
2. Replace the UI.
3. Print config page again.
4. Verify the FW and reload FW if not the current version.

WARNING

Switch off the electricity to the machine. Disconnect the power cord from the customer supply while performing tasks that do not need electricity. Electricity can cause death or injury. Moving parts can cause injury.

1. Verify the FW version before and after replacement of the UI, print a configuration page before starting removal.
2. Remove the Left Side Cover, REP 19.2.1.
3. Remove the Left Side IIT Cover, REP 19.2.4.
4. Remove the UI Inner Cover, REP 1.1.2.
5. Remove the UI Access Door from the console, REP 1.1.7.
6. Refer to Figure 1 to release the UI Harness and the Speaker Harness from the console.

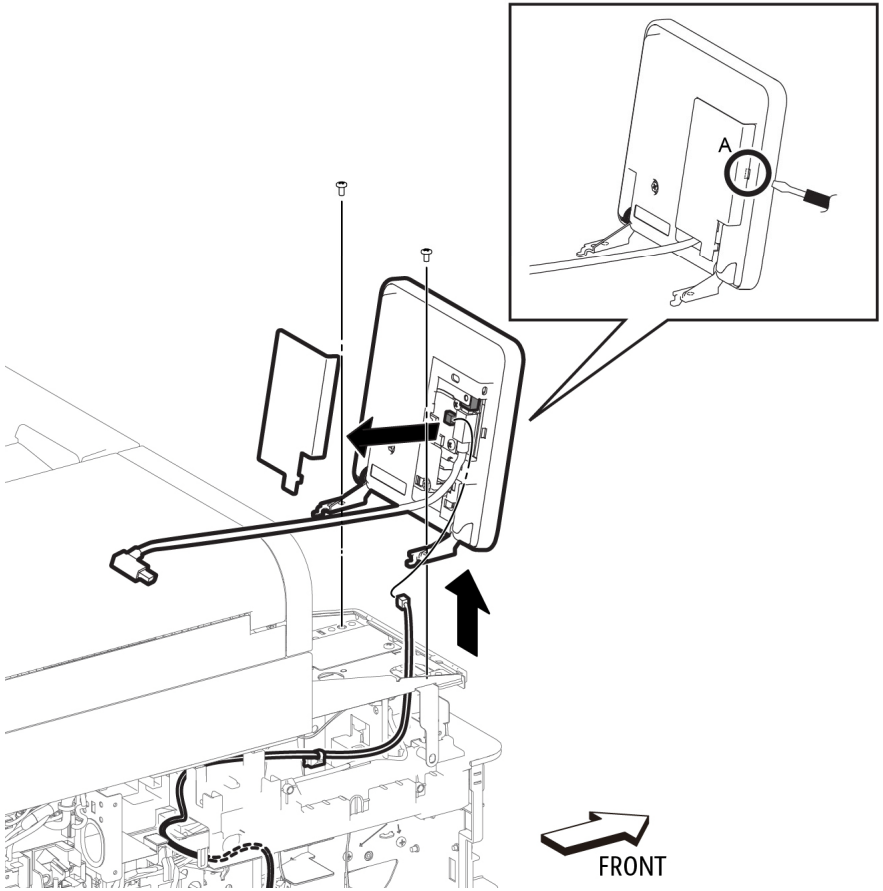

Figure 1 Remove the UI Console Assembly (MFP)

7. Refer to Figure 1 to remove two screws (silver, M4x6mm) attaching the UI Console Assembly to the UI Frame Assembly.
8. Remove the UI Console Assembly from the UI Frame Assembly.

Replacement

CAUTION

Avoid damaging harnesses during replacement. When attaching the UI Console Assembly to the UI Frame Assembly, be sure to feed the harnesses completely back through the frame before attaching the console to the frame.

Avoid damaging wires during replacement. When replacing wire harnesses, use factory-installed routes.

REP 1.1.2 UI Inner Cover (MFP)

Parts List on PL 1.1 Item 2

Removal

WARNING

Switch off the electricity to the machine. Disconnect the power cord from the customer supply while performing tasks that do not need electricity. Electricity can cause death or injury. Moving parts can cause injury.

1. Remove the Left Side IIT Cover, REP 19.2.4.
2. Refer to Figure 1 to remove one screw (black, M3x6mm) attaching the UI Inner Cover to the UI Frame Assembly, and remove the cover.

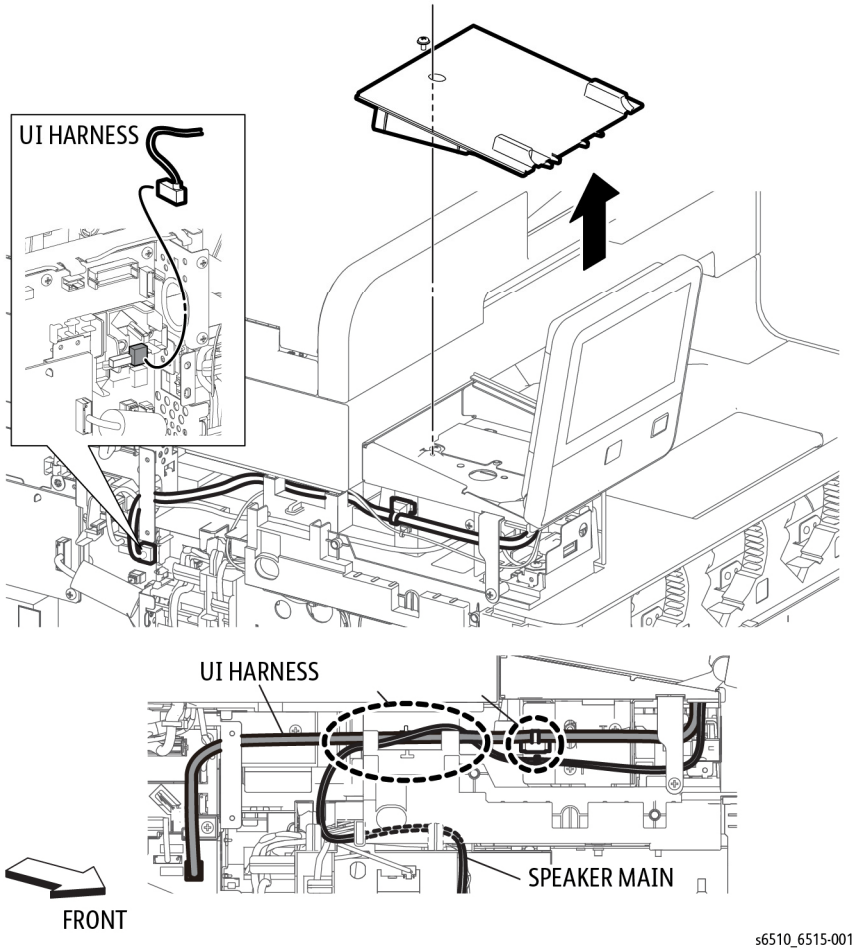

Figure 1 Remove the UI Inner Cover

REP 1.1.5 UI Harness (MFP)

Parts List on PL 1.1 Item 5

Removal

WARNING

Switch off the electricity to the machine. Disconnect the power cord from the customer supply while performing tasks that do not need electricity. Electricity can cause death or injury. Moving parts can cause injury.

1. Remove the Left Side Cover, REP 19.2.1.
2. Remove the ESS Top Plate, REP 18.1.18.
3. Remove the Left Side IIT Cover, REP 19.2.4.
4. Remove the UI Access Door, REP 1.1.7.
5. Remove the UI Inner Cover, REP 1.1.2.
6. Refer to Figure 1 to unplug the UI Harness from the ESS Board.

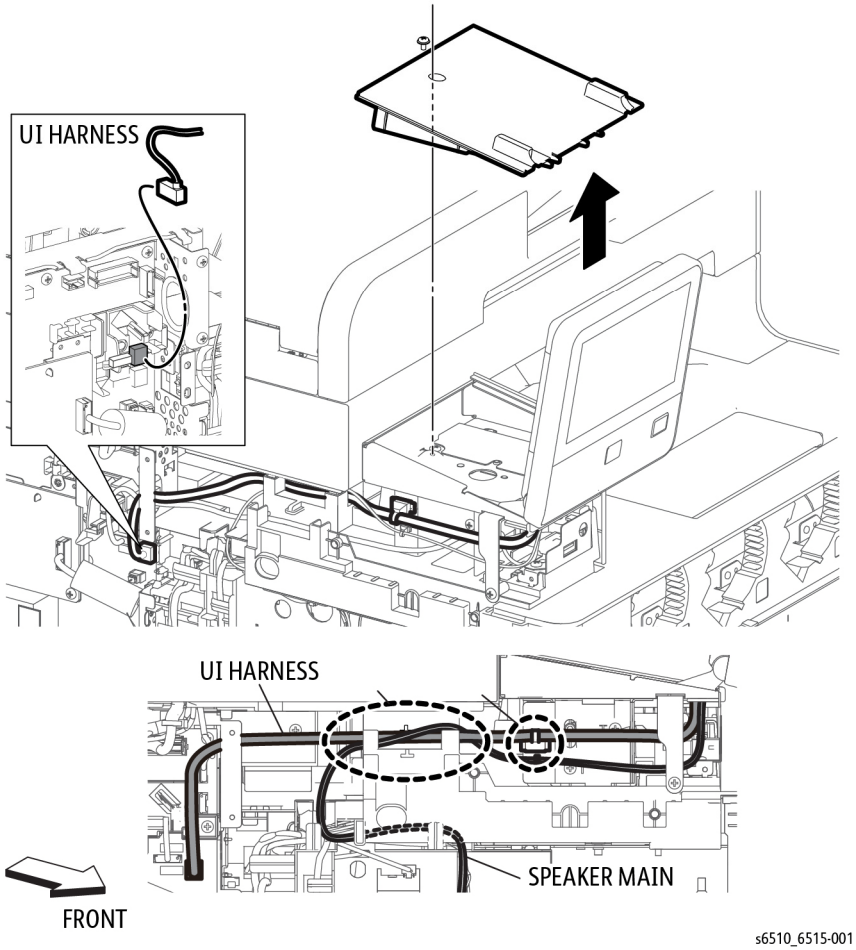

Figure 1 Release the UI Harness from the Printer (MFP)

7. Release the harness clamp from the UI Frame Assembly.
8. Remove the harness from the guide on the Top Cover Assembly.
9. Refer to Figure 2 to unplug the top end of the UI Harness from the UI Console Assembly and remove the harness.

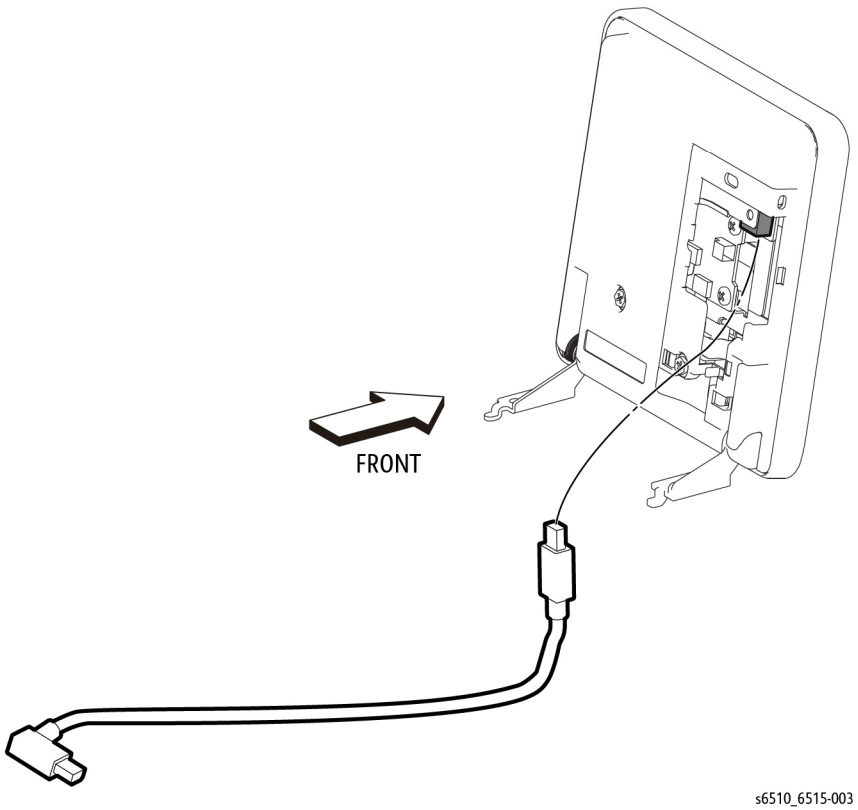

Figure 2 Remove the UI Harness (MFP)

Replacement

CAUTION

Avoid damaging wires during replacement. When replacing wire harnesses, use factory-installed routes.

REP 1.1.7 UI Access Door (MFP)

Parts List on PL 1.1 Item 7

Removal

WARNING

Switch off the electricity to the machine. Disconnect the power cord from the customer supply while performing tasks that do not need electricity. Electricity can cause death or injury. Moving parts can cause injury.

1. Refer to Figure 1 to insert a flat blade screwdriver at the side of the UI Access Door and slightly open the UI Access Door.

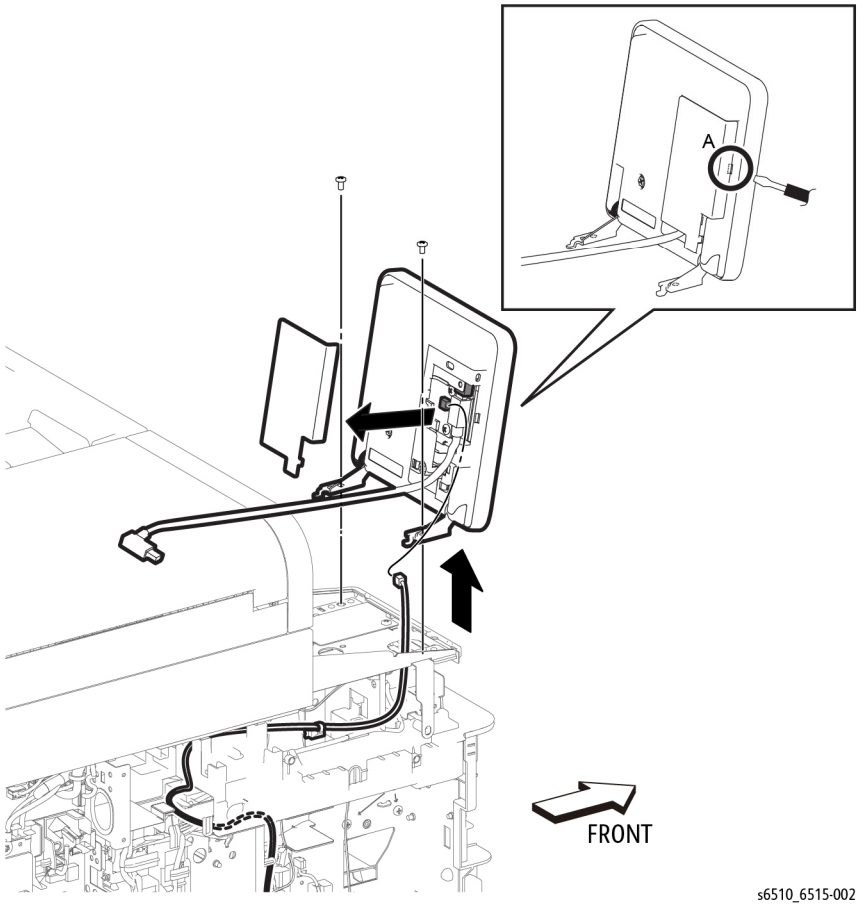

Figure 1 Remove the UI Access Door (MFP)

2. Remove the UI Access Door from the console.

REP 1.1.99 UI Frame Assembly (MFP)

Parts List on PL 1.1 Item 99

Removal

WARNING

Switch off the electricity to the machine. Disconnect the power cord from the customer supply while performing tasks that do not need electricity. Electricity can cause death or injury. Moving parts can cause injury.

1. Remove the UI Console Assembly, REP 1.1.1.
2. Refer to Figure 1 to remove the three screws (silver, tapping, M3x8mm) attaching the left side of the UI Frame Assembly.

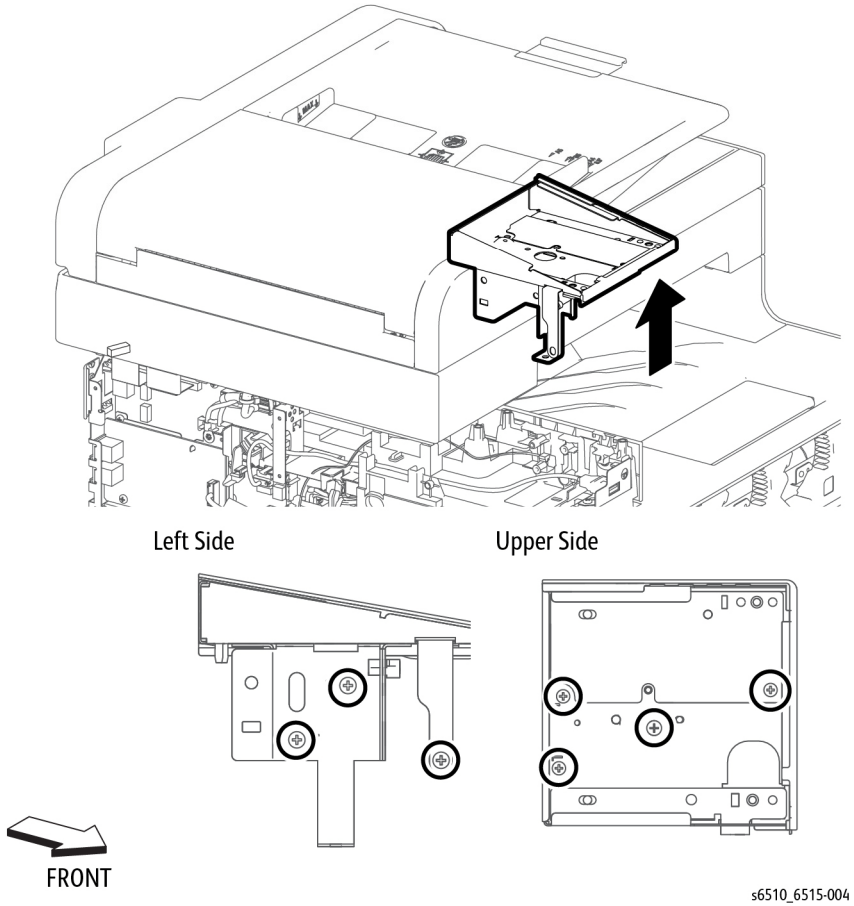

Figure 1 Remove the UI Frame Assembly (MFP)

3. Refer to Figure 1 to remove the three screws (silver, tapping, M3x8mm) from the top surface of the UI Frame Assembly.
4. Refer to Figure 1 to remove one screw (silver, M4x6mm) through the top access hole in the UI Frame Assembly attaching the frame's lower support arm.
5. Slide the UI Frame Assembly slightly to the left side while lifting up to remove the frame assembly with the attached UI Frame Cover.

REP 1.2.1 UI Console Assembly (SFP)

Parts List on PL 1.2 Item 1

Removal

WARNING

Switch off the electricity to the machine. Disconnect the power cord from the customer supply while performing tasks that do not need electricity. Electricity can cause death or injury. Moving parts can cause injury.

1. Remove the Left Rear Top Cover, REP 19.3.24.
2. Open the Toner Cover.
3. Refer to Figure 1 to release the two hooks in the direction of the arrows and slightly lift up the UI Console Assembly.

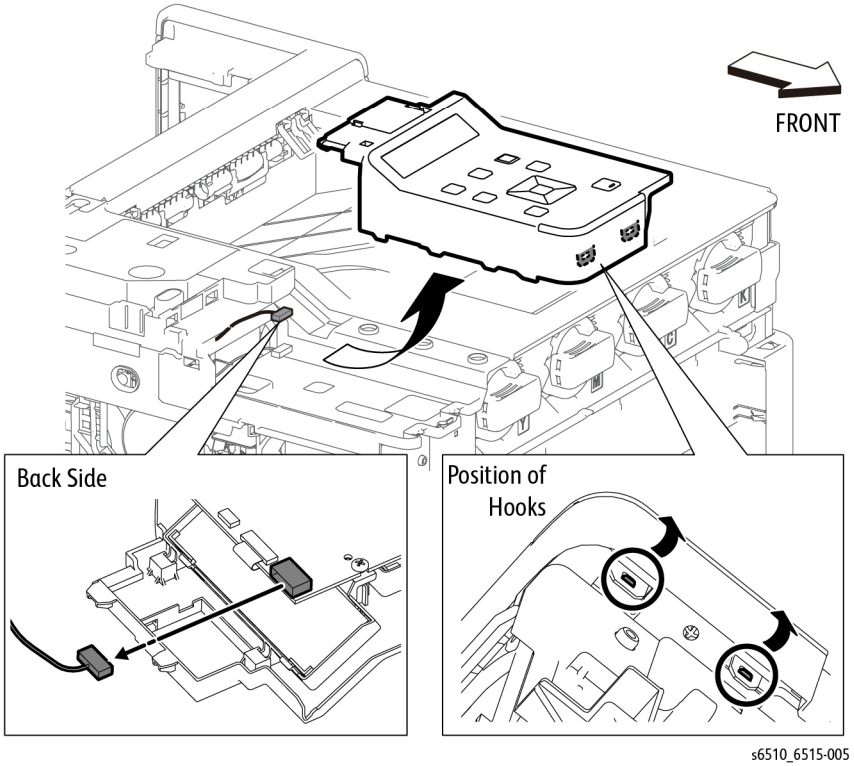

Figure 1 Remove the UI Console Assembly (SFP)

4. Unplug the connector (P/J220) while lifting the UI Console Assembly up from the printer.

REP 1.2.2 UI Harness (SFP)

Parts List on PL 1.2 Item 2

Removal

WARNING

Switch off the electricity to the machine. Disconnect the power cord from the customer supply while performing tasks that do not need electricity. Electricity can cause death or injury. Moving parts can cause injury.

1. Remove the UI Console Assembly, REP 1.2.1.
2. Remove the Left Side Cover, REP 19.4.1.
3. Remove the Top Cover, REP 19.3.99.
4. Remove the ESS Top Plate, REP 18.1.18.
5. Refer to Figure 1 to unplug the lower end of the UI Harness from the ESS Board.

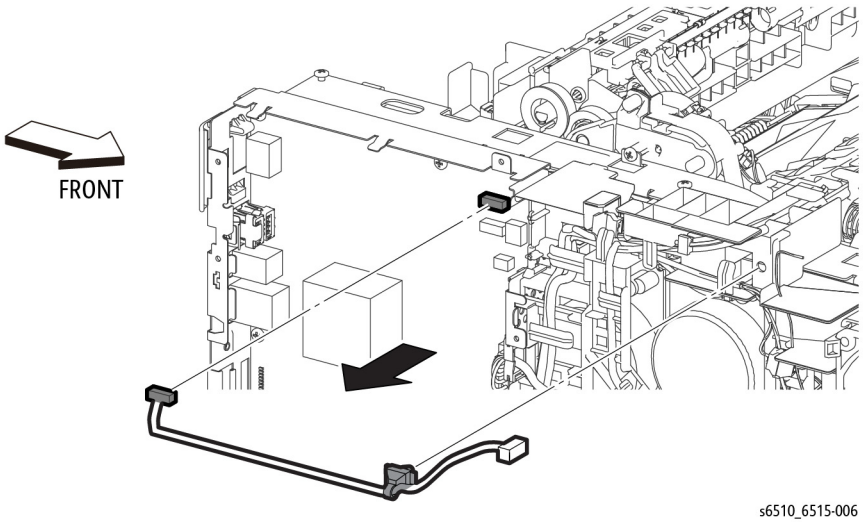

Figure 1 Remove the UI Harness Assembly (SFP)

6. Release the harness from the clamp, and remove the harness.

Replacement

CAUTION

Avoid damaging wires during replacement. When replacing wire harnesses, use factory-installed routes.

REP 2.1.1 LPH Color Head Assembly

Parts List on PL 2.1 Item 1

Removal

WARNING

Switch off the electricity to the machine. Disconnect the power cord from the customer supply while performing tasks that do not need electricity. Electricity can cause death or injury. Moving parts can cause injury.

CAUTION

Protect the drums from deterioration. When performing the following step, cover the drums with paper or similar material to prevent exposure to direct sunlight or room light.

Avoid damaging the LED strip on the LPH Color Head Assembly. Handle the LPH Color Head Assembly carefully.

1. Remove the Drum Cartridge, REP 8.1.1.
2. Open the Rear Cover.
3. Remove the Transfer Belt Unit, REP 6.1.1.

CAUTION

In the following steps, avoid breaking the FFC lock lever when releasing the FFC. Open the lever just far enough to release the FFC.

NOTE: *In the following steps, when releasing the lock lever on the connector, slightly open the lock lever to 15 degrees until the lock lever contacts the FFC connector as shown in Figure 1. After releasing the lock lever, hold the lever while gently pulling the FFC from the connector.*

NOTE: *You can remove a single LPH Color Head Assembly if necessary.*

4. Refer to Figure 1 to remove four screws (silver, M3x6mm) from the LPH Color Head Assembly.

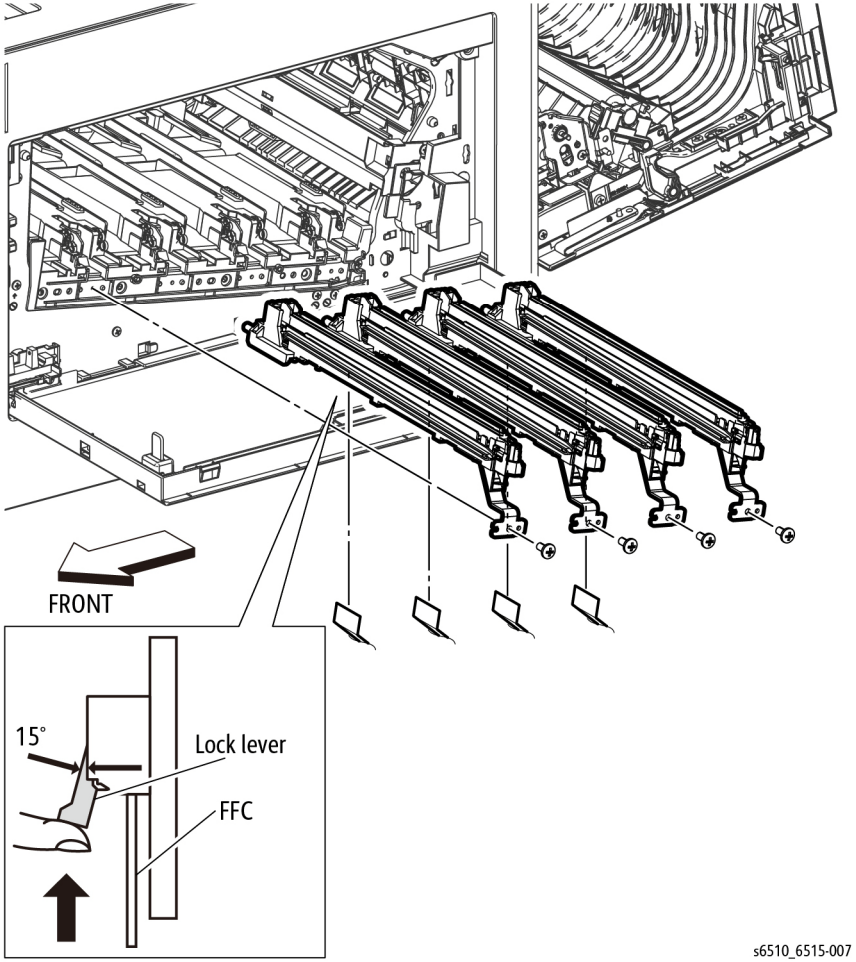

Figure 1 Remove the LPH Color Head Assembly

5. Refer to Figure 1 to pull the LPH Color Head Assembly out from the Drum Cartridge Guide and disconnect the four flat cables (FFC).
6. Remove the LPH Color Head Assembly.

Replacement

When reconnecting the FFC, there is no need to release the lock lever. Insert the FFC vertically into the correct slit until seated with a click as shown in Figure 2.

After installing the Drum Cartridge, clean the LPH Color Head Assembly by removing the LPH Cleaner Assembly, REP 8.1.6, and cleaning the LPH Color Heads.

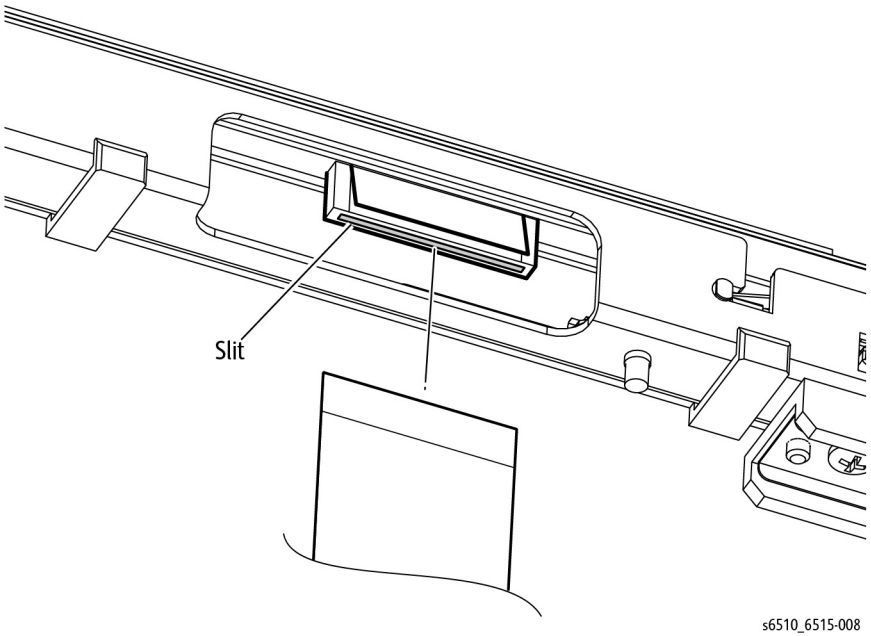

Figure 2 Reconnect the LPH Color Head FFC

REP 2.1.11 Guide Cover Assembly

Parts List on PL 2.1 Item 11

Removal

WARNING

Switch off the electricity to the machine. Disconnect the power cord from the customer supply while performing tasks that do not need electricity. Electricity can cause death or injury. Moving parts can cause injury.

1. Remove the Right Side Cover; REP 19.1.97 (MFP), REP 19.3.97 (SFP).
2. Refer to Figure 1 to remove the Guide Cover Assembly, by gently prying the top of the cover down to release the hooks along the bottom.

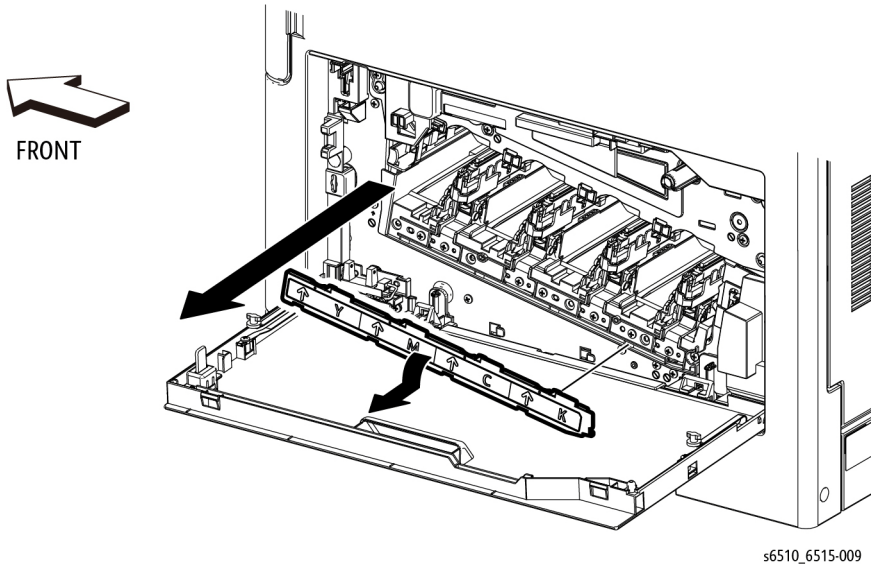

Figure 1 Remove the Guide Cover Assembly

REP 2.1.99 LPH Xerographic CRUM FFC Kit

Parts List on PL 2.1 Item 99

Removal

WARNING

Switch off the electricity to the machine. Disconnect the power cord from the customer supply while performing tasks that do not need electricity. Electricity can cause death or injury. Moving parts can cause injury.

1. Remove the Right Side Cover; REP 19.1.97 (MFP), REP 19.3.97 (SFP).
2. Remove the Left Side Cover; REP 19.2.1 (MFP), REP 19.4.1 (SFP).
3. Remove the Drum Cartridges Y,M,C,K, REP 8.1.1.
4. Remove the Transfer Belt Unit, REP 6.1.1.
5. Remove the LPH Color Head Assembly, REP 2.1.1.
6. Remove the ESS Top Plate, REP 18.1.18.
7. Refer to Figure 1 to remove two screws (silver, M3x6mm) attaching the ESS Lower Plate and remove the plate.

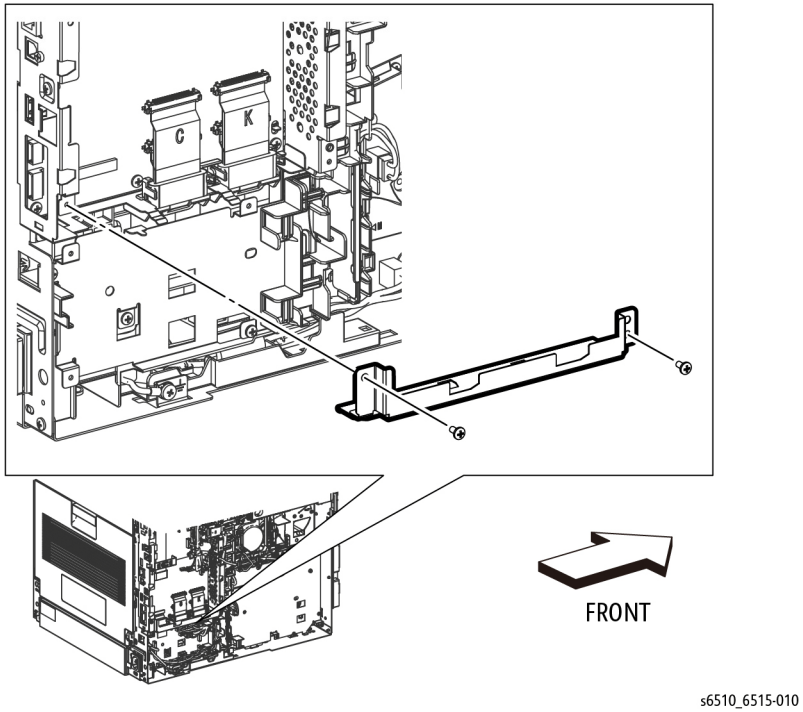

Figure 1 Remove the ESS Lower Plate

8. Remove the MCU Board; REP 18.1.1 (MFP), REP 18.5.1 (SFP).
9. Remove the MCU Plate; REP 18.1.21 (MFP, REP 18.5.21 (SFP).

CAUTION

In the following step, avoid breaking the FFC lock lever when releasing the FFC. Open the lever just far enough to release the FFC.

NOTE: *In the following step, when releasing the FFC lock lever on the connector, slightly open the lock lever to 15 degrees until the lock lever contacts the FFC connector as shown in Figure 2. After releasing the lock lever, hold the lever while gently pulling the FFC from the connector.*

10. Unplug the connectors (P/J1360, P/J1361, P/J1362, P/J1363) from the ESS Board.

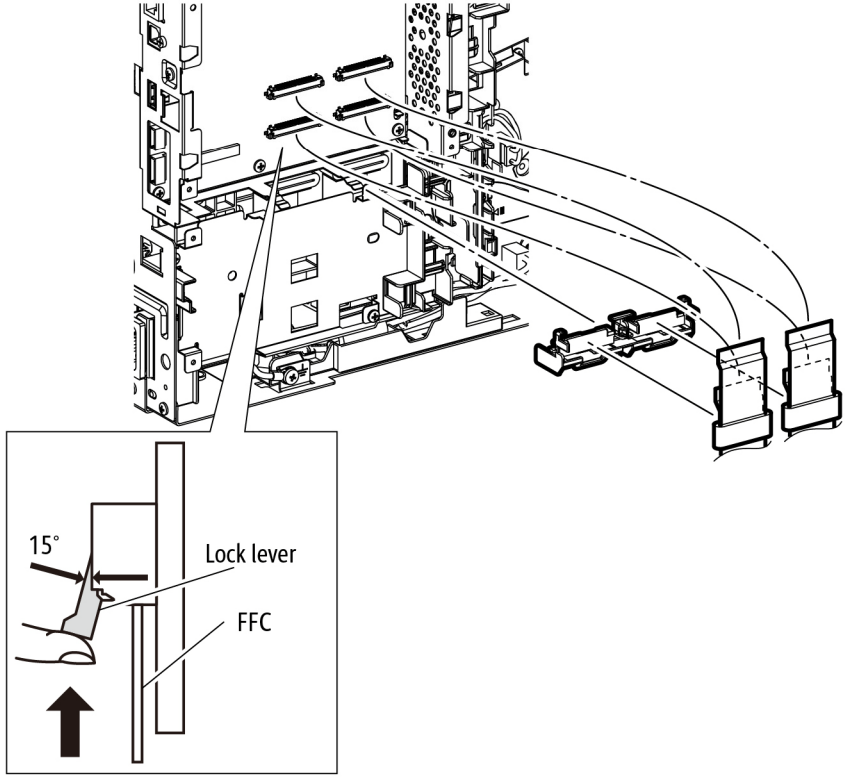

s6510_6515-011

Figure 2 Remove the LPH Color FFC Guide

11. Refer to Figure 2 to remove the LPH Color FFC Guide.
12. Refer to Figure 3 to remove the four LPH Ferrite Cores, by first pressing the reinforcing tabs flat against the FFC.

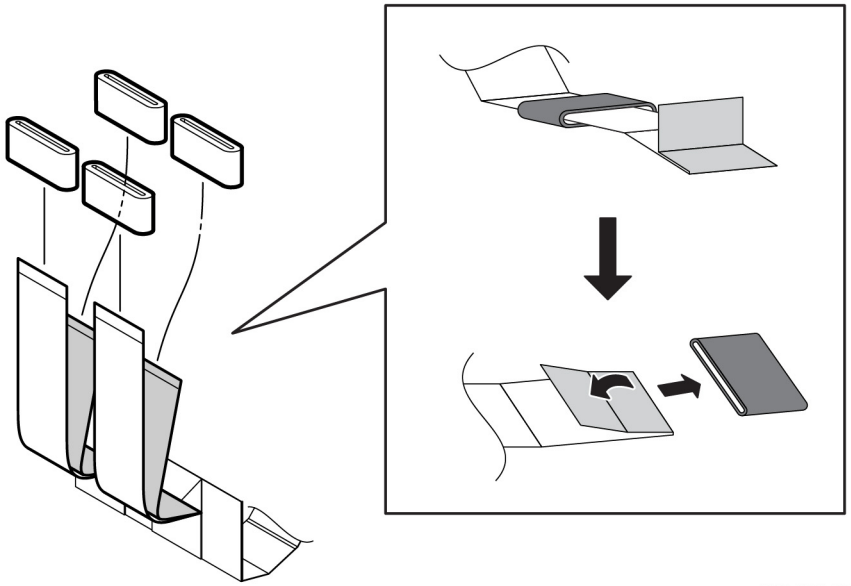

s6510_6515-012

Figure 3 Remove the LPH Ferrite Cores

13. Refer to Figure 4 to remove the screw (silver, M3X6mm) attaching the CTD Sensor Cover and remove the cover.

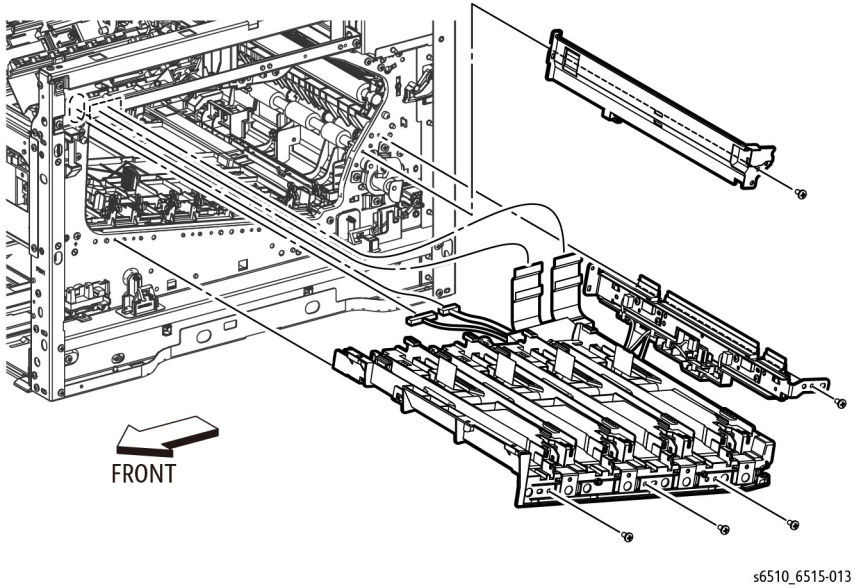

Figure 4 Remove the CTD Sensor Cover, Sensor, and LPH FFC Xerographic CRUM

14. Remove the CTD Sensor Assembly and the LPH Xerographic CRUM FFC:
    a. Refer to Figure 4 to remove the four screws (silver, M3X6mm) attaching the CTD Sensor Assembly and the LPH Xerographic CRUM FFC.
    b. Pull the CRUM FFC out about one-third of the way, then feed the four FFC harnesses out through the chassis.
    c. Feed the remaining two CRUM FFC wire harnesses out through the chassis.
    d. Remove the CTD Sensor and the CRUM FFC.
15. Refer to Figure 5 to unplug the three connectors (P/J142, P/J143, P/J145) from the CRUM FFC (connecting to the CTD Sensor).

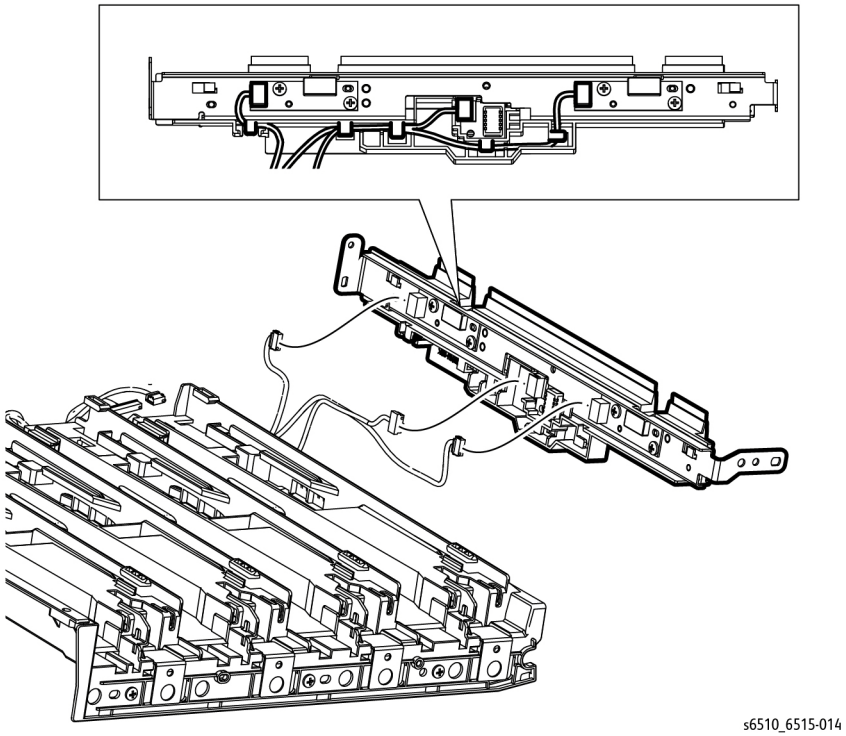

Figure 5 Unplug the CTD Sensor Connectors

16. Refer to Figure 5 to release the cables from the hooks and remove the CTD Sensor from the LPH Xerographic CRUM FFC.

Replacement

When installing the LPH Xerographic CRUM FFC and arranging the FFCs, follow these instructions:

- When installing the LPH Xerographic CRUM FFC, arrange the FFCs as shown in Figure 6.

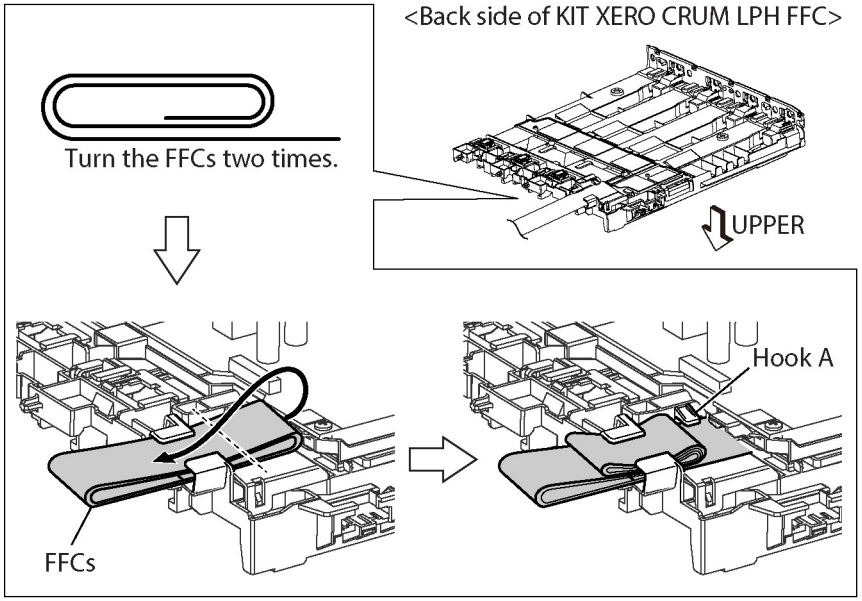

Figure 6 Fold the FFCs and Install the LPH Xerographic CRUM

- When setting the FFCs, be careful not to catch the turned FFCs at the Hook A shown in Figure 6.
- When folding and connecting the FFCs, arrange the FFCs as shown in Figure 7.

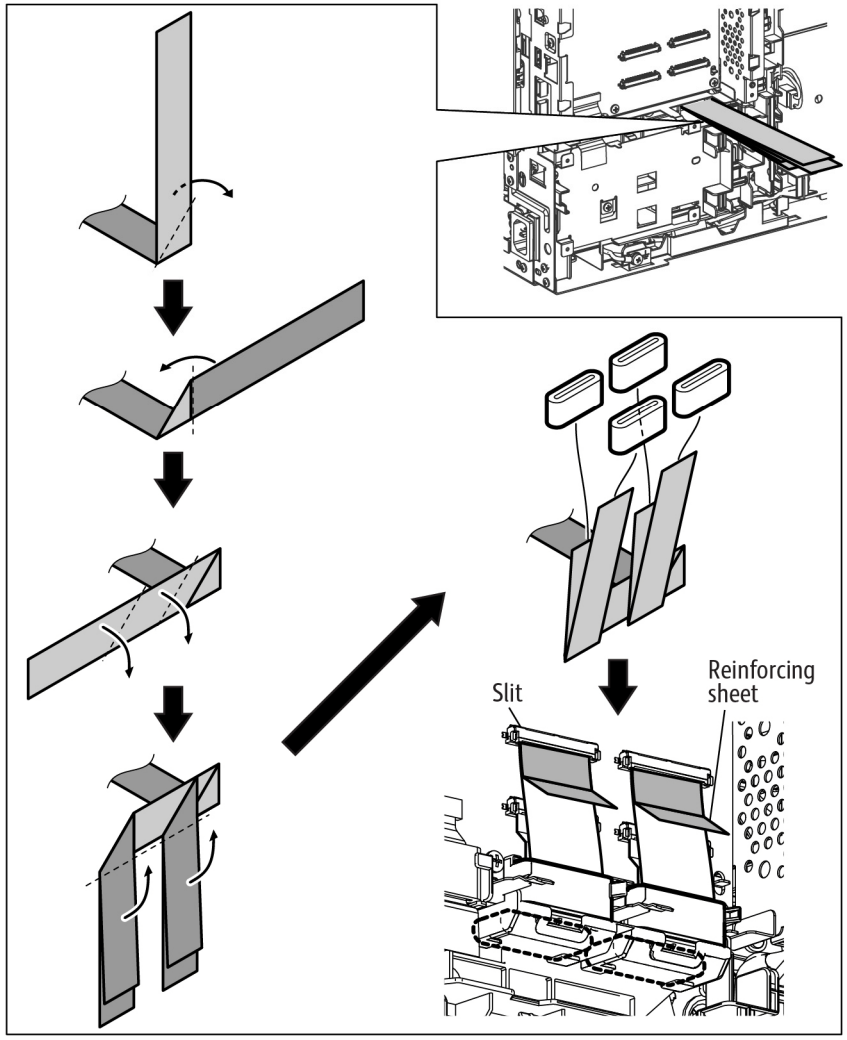

s6510_6515-016

Figure 7 Fold and Connect the FFCs

- Before inserting the FFC into the connector, bend the reinforcing tab to 90 degrees as shown in the figure; then, hold the tab to insert the FFC into the slit until hearing a click.
- When installing the FFC, check that the portion A of the FFC is arranged at the hook shown in Figure 8. If not, the FFC may be damaged by coming in contact with neighboring parts.

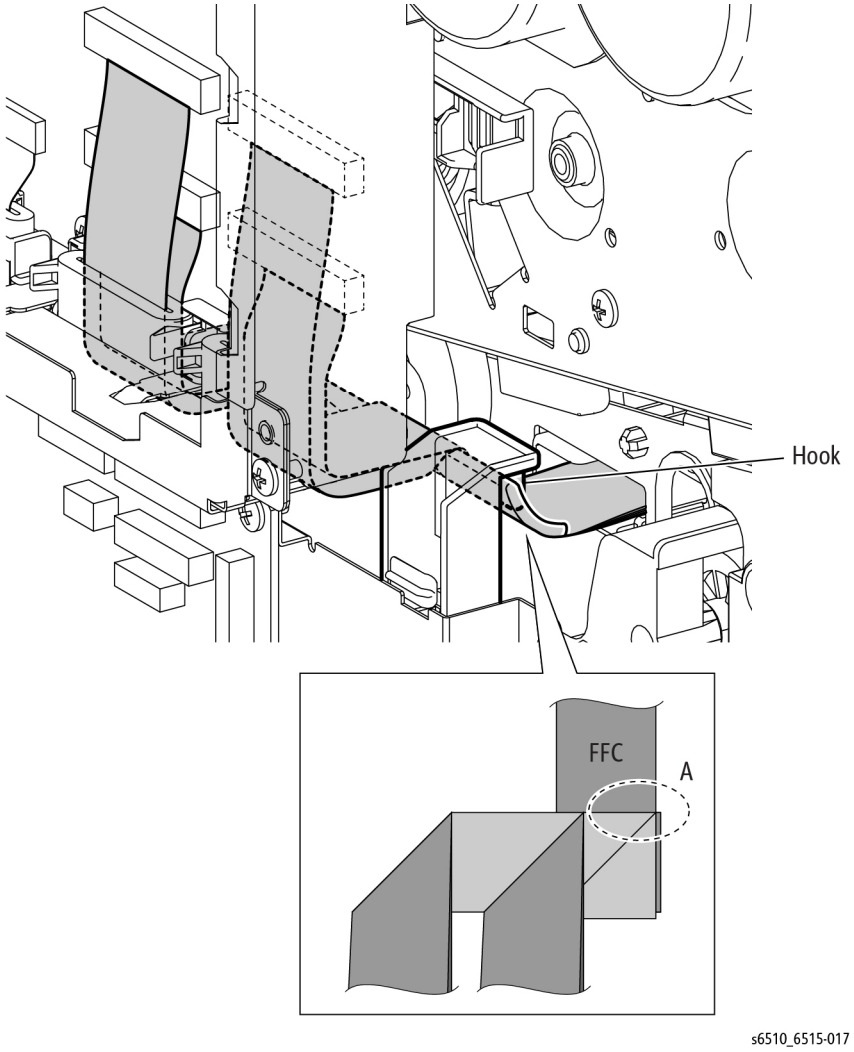

Figure 8 Position FFC to Avoid Damage

REP 3.1.1 Main Drive Assembly

Parts List on PL 3.1 Item 1

Removal

WARNING

Switch off the electricity to the machine. Disconnect the power cord from the customer supply while performing tasks that do not need electricity. Electricity can cause death or injury. Moving parts can cause injury.

CAUTION

To avoid potentially serious problems, follow the procedure shown below and use caution when removing and handling this part. Do not disassemble this part. If replacing, use genuine Xerox parts.

1. Remove the Left Side Cover; REP 19.2.1 (MFP), REP 19.4.1 (SFP).
2. Remove the Fuser Assembly, REP 7.1.1.
3. Remove the MCU Board; REP 18.1.1 (MFP), REP 18.5.1 (SFP).
4. Remove the ESS MCU FFC; REP 18.1.2 (MFP), REP 18.5.2 (SFP).
5. Remove the FAX Board, REP 18.1.9 (MFP only).
6. Remove the ESS Board and Box; REP 18.1.19 (MFP), REP 18.5.19 (SFP).
7. Remove the LVPS Board; REP 18.1.16 (MFP), REP 18.5.16 (SFP).
8. Remove the LVPS Plate; REP 18.1.20 (MFP), REP 18.5.20 (SFP).

CAUTION

Make sure that the Fuser harness is replaced following the factory-installed route.

9. Refer to Figure 1 to unplug the connectors P/J272, P/J273 and remove the Fuser harness from the guide.

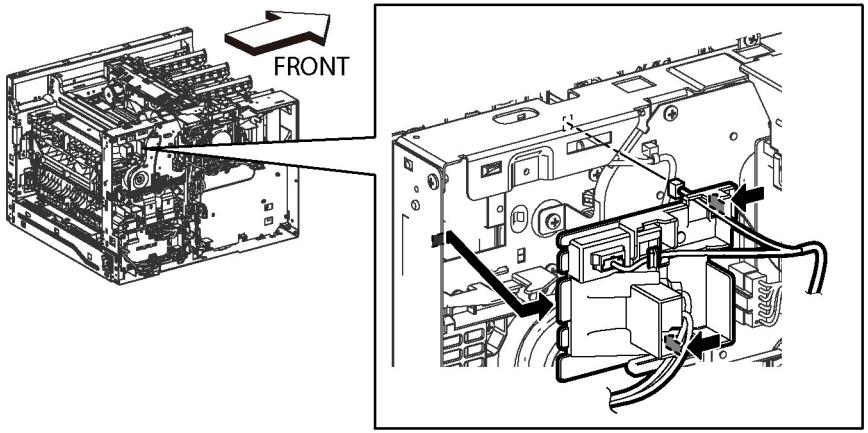

s6510_6515-101

Figure 1 Remove the Fuser Harness Guide

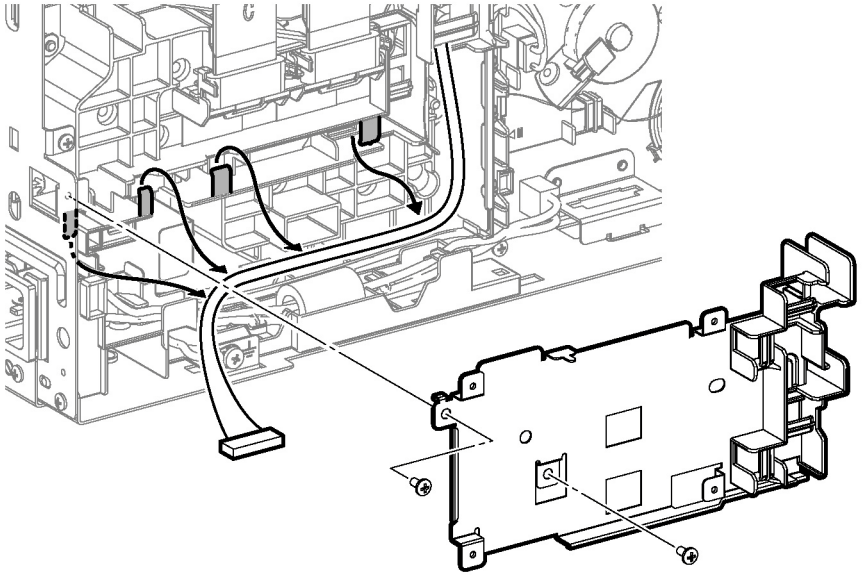

s6510_6515-102

Figure 2 Release Harness Behind the MCU Plate

10. Refer to Figure 1 to release the two hooks attaching the Fuser Harness Guide.
11. Remove the Main Fan, REP 4.1.1.
12. Remove the Main Fan Duct, REP 4.1.2.
13. Remove the MCU Plate; REP 18.1.21 (MFP), REP 18.5.21 (SFP).
14. Refer to Figure 2 to release the harness from the four hooks on the harness guide.
15. Refer to Figure 3 to unplug connectors and release the cables.

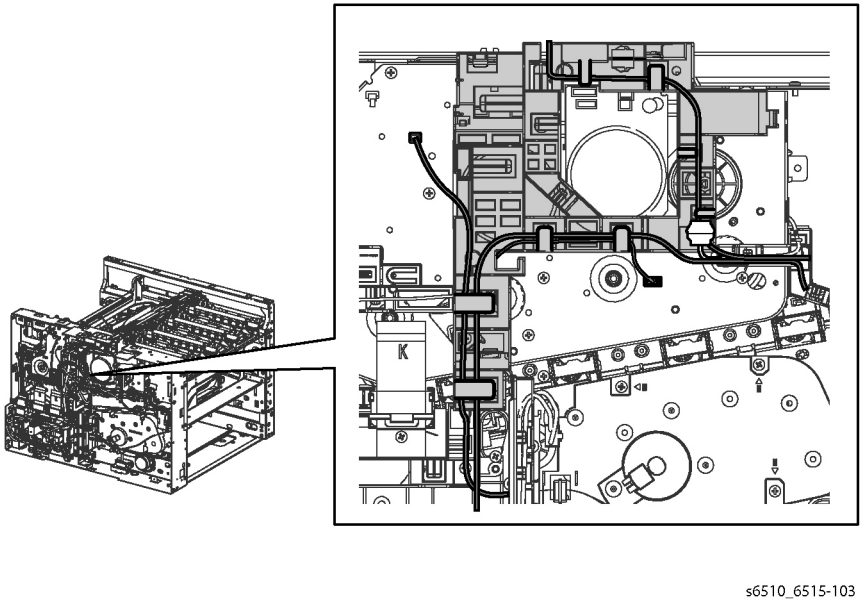

Figure 3 Unplug Connectors and Release the Cables

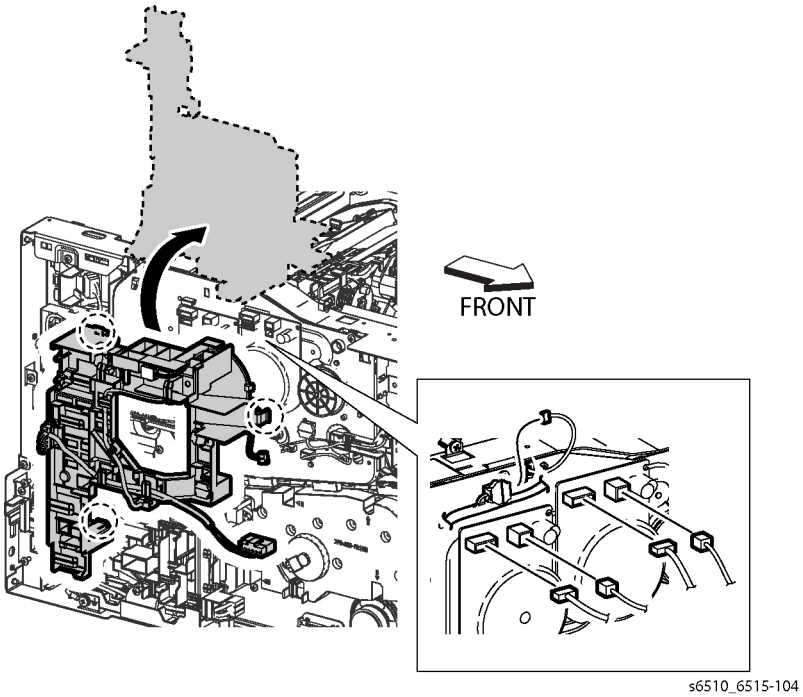

Figure 4 Remove the DC Harness Guide

16. Referring to Figure 4 showing the DC Harness Guide, do the following:
    a. Unplug connector P/J464.
    b. Release the three hooks of the DC Harness Guide and rotate the guide up onto the top of the printer frame.
17. Refer to Figure 4 to unplug the five connectors from the Main Drive (P/J571, P/J572, P/J573, P/J 574, P/J464).
18. Refer to Figure 5 to release the cable from the Duct Harness Guide.

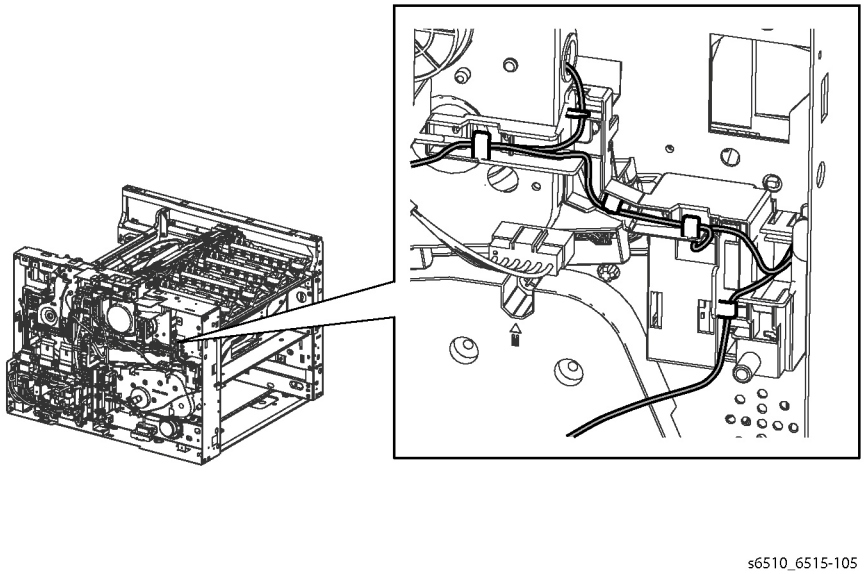

Figure 5 Release Cable from the Duct Harness Guide

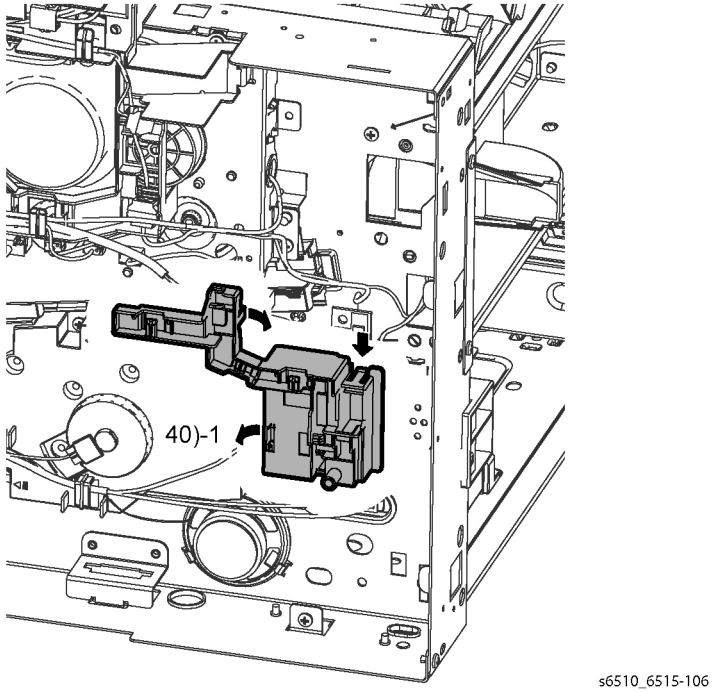

Figure 6 Remove the Duct Harness Guide

19. Refer to Figure 6 to release three hooks on the Duct Harness Guide and remove the guide.

20. Refer to Figure 7 to release the harness from the Interlock Harness Guide.

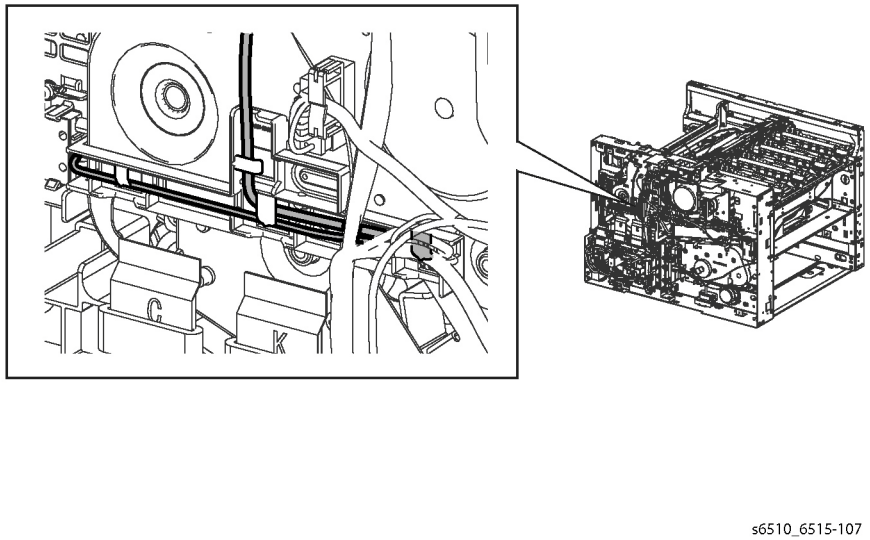

Figure 7 Release Cable from the Interlock Harness Guide

21. Refer to Figure 8 to release the boss on the Interlock Harness Guide and remove the guide.

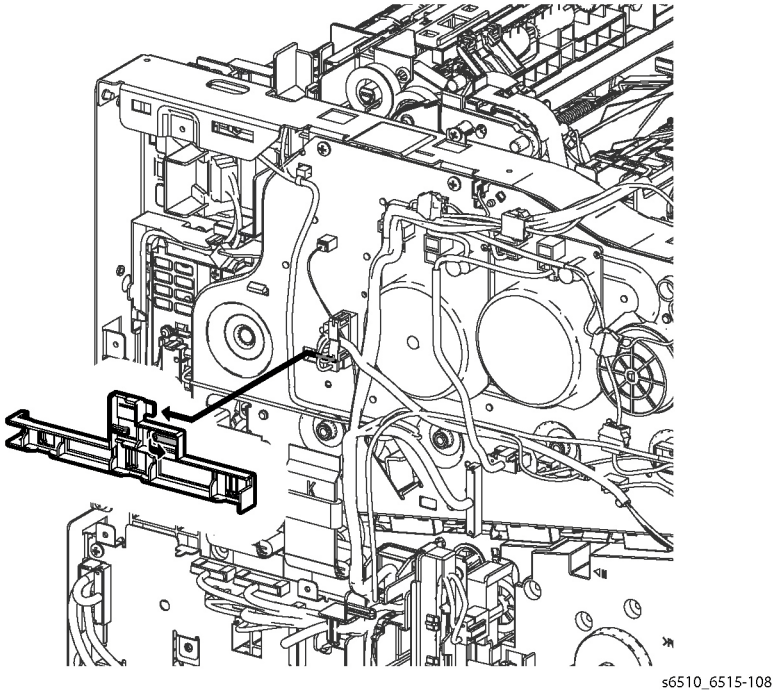

Figure 8 Remove the Interlock Harness Guide

22. Remove the PH Drive Assembly, REP 3.1.2.

CAUTION

When performing the following step to remove the Drive Assembly, use caution not to drop the gears.

23. Refer to Figure 9 to remove the seven screws (silver, M3x6mm) attaching the Main Drive Assembly and remove the assembly.

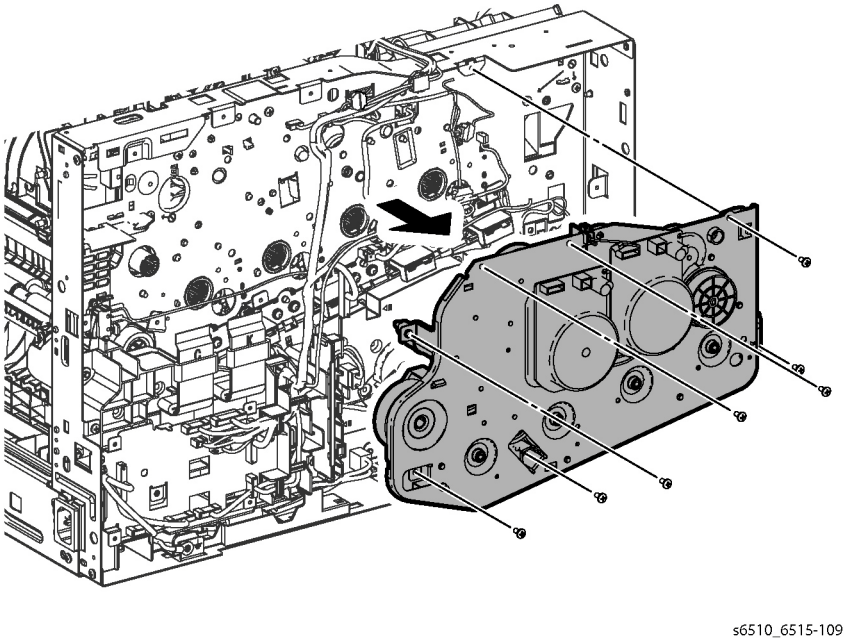

Figure 9 Remove the Main Drive Assembly

NOTE: *When placing the Main Drive Assembly on the workbench, face the gear side upward to prevent the gears from falling off.*

NOTE: *Figure 10 shows how the gears are installed on the Main Drive Assembly.*

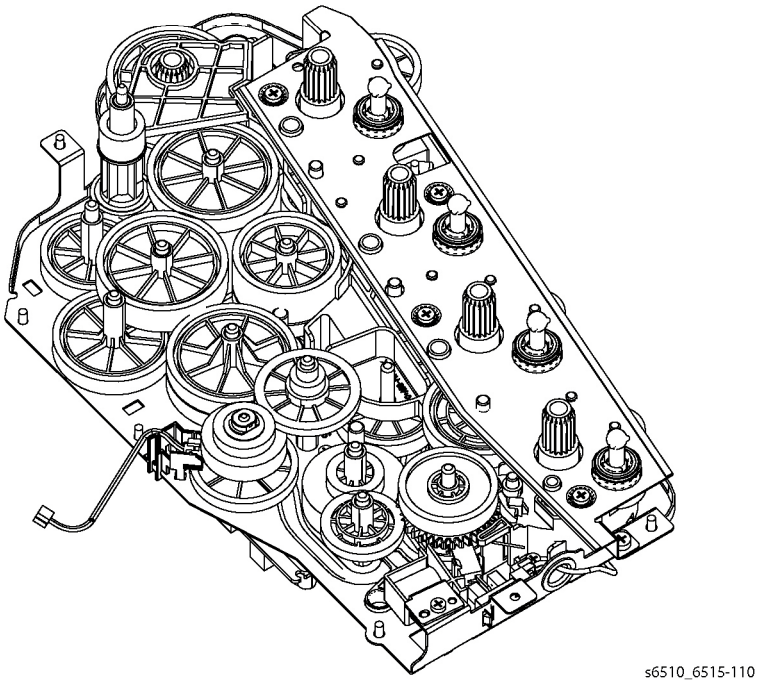

Figure 10 Gear Locations on the Main Drive Assembly

Replacement

CAUTION

Avoid damaging wires during replacement. When replacing wire harnesses, use factory-installed routes.

REP 3.1.2 Paper Handling (PH) Drive Assembly

Parts List on PL 3.1 Item 2

Removal

WARNING

Switch off the electricity to the machine. Disconnect the power cord from the customer supply while performing tasks that do not need electricity. Electricity can cause death or injury. Moving parts can cause injury.

1. Remove the Left Side Cover; REP 19.2.1 (MFP), REP 19.4.1 (SFP).
2. Remove the Rear Cover; REP 19.2.99 (MFP), REP 19.4.99 (SFP).
3. Remove the MCU Board, REP 18.1.1 (MFP); REP 18.5.1 (SFP).
4. Remove the MCU Plate; REP 18.1.21 (MFP, REP 18.5.21 (SFP).
5. Remove the Wireless Module, REP 18.1.11.
6. Remove the FAX Board, REP 18.1.9 (MFP only).
7. Remove the ESS MCU FFC; REP 18.1.2 (MFP), REP 18.5.2 (SFP).
8. Remove ESS Board and Box; REP 18.1.19 (MFP), REP 18.5.19 (SFP).
9. Remove the LVPS Board; REP 18.1.16 (MFP), REP 18.5.16 (SFP).
10. Remove the LVPS Plate; REP 18.1.20 (MFP), REP 18.5.20 (SFP).
11. Refer to Figure 1 to remove the one screw (silver, M3x6mm) from the Duplex Gear Cover and remove the cover.

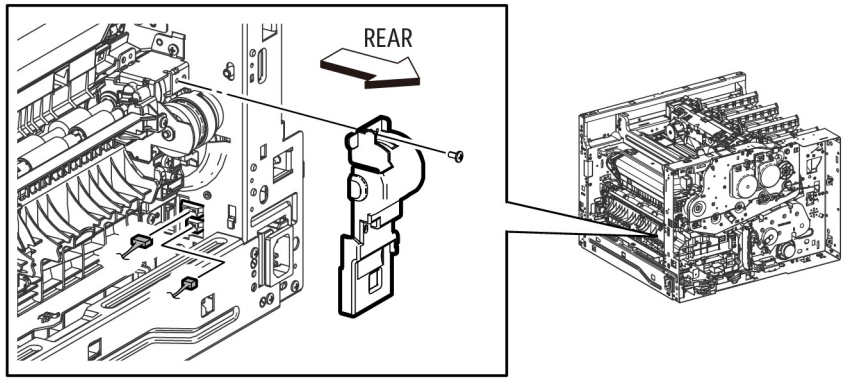

Figure 1 Remove the MCU Harness Guide and Duplex Gear Cover

12. Refer to Figure 1 to unplug connectors (P/J541,P/J544) and release the cable from the cable guide.
13. Refer to Figure 2 to remove the one screw (silver, M3x6mm) and remove the Bracket as shown.

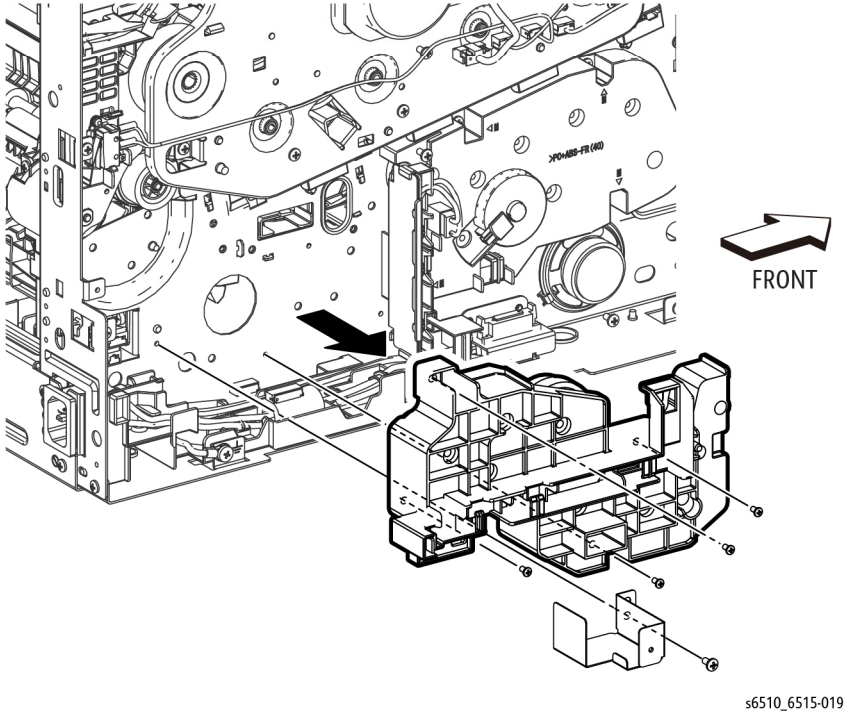

Figure 2 Remove the MCU Plate, Bracket, and PH Drive Assembly

CAUTION

When performing the following step to remove the Drive Assembly, use caution not to drop the gears.

14. Refer to Figure 2 to remove the four screws (silver, M3x6mm) attaching the PH Drive Assembly and remove the assembly.

NOTE: *When placing the PH Drive Assembly on the workbench, face the gear side upward to prevent the gears from falling off.*

NOTE: *Figure 3 shows how the gears are installed on the PH Drive Assembly.*

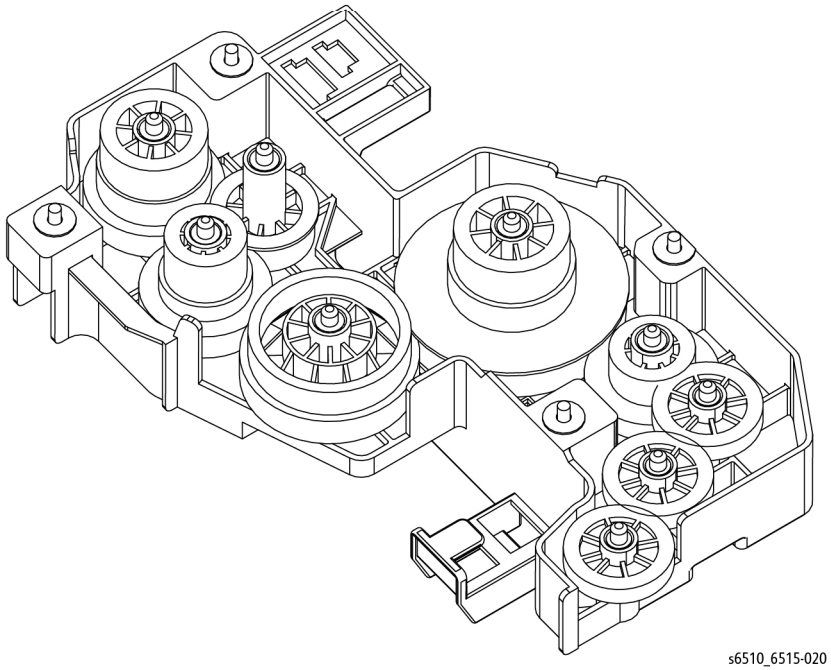

Figure 3 Gear Locations on the PH Drive Assembly

Replacement

CAUTION

Avoid damaging wires during replacement. When replacing wire harnesses, use factory-installed routes.

REP 3.1.3 Bypass (MSI) Drive Assembly

Parts List on PL 3.1 Item 3

Removal

WARNING

Switch off the electricity to the machine. Disconnect the power cord from the customer supply while performing tasks that do not need electricity. Electricity can cause death or injury. Moving parts can cause injury.

1. Remove the Left Side Cover; REP 19.2.1 (MFP), REP 19.4.1 (SFP).
2. Remove the LVPS Board; REP 18.1.16 (MFP), REP 18.5.16 (SFP).
3. Remove the LVPS Plate; REP 18.1.20 (MFP), REP 18.5.20 (SFP).
4. Refer to Figure 1 to release the harnesses from the Harness guides of the MSI Drive Assembly.

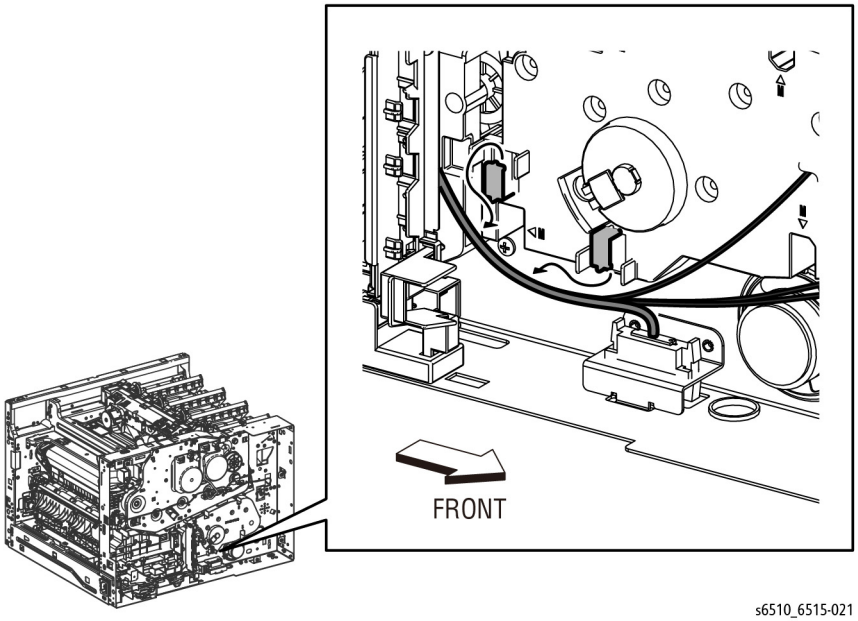

Figure 1 Release the MSI Drive Harnesses

5. Refer to Figure 2 to unplug the connector (P/J481) as shown.

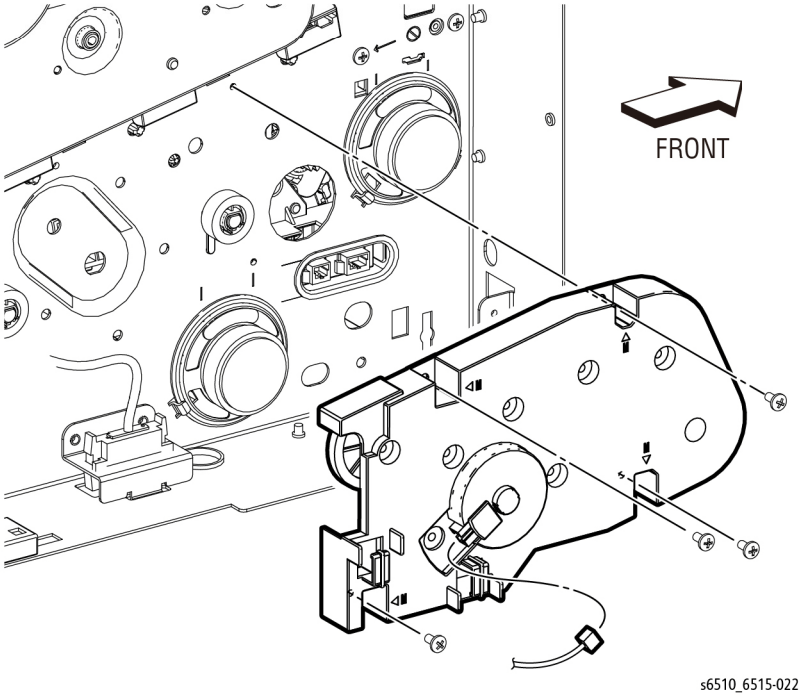

Figure 2 Remove the MSI Drive

CAUTION

When performing the following step to remove the Drive Assembly, use caution not to drop the gears.

6. Refer to Figure 2 to remove the four screws (silver, M3X6mm) attaching the MSI Drive Assembly and remove the assembly.

NOTE: *When placing the MSI Drive Assembly on the workbench, face the gear side upward to prevent the gears from falling off.*

NOTE: *Figure 3 shows how the gears are installed on the MSI Drive Assembly.*

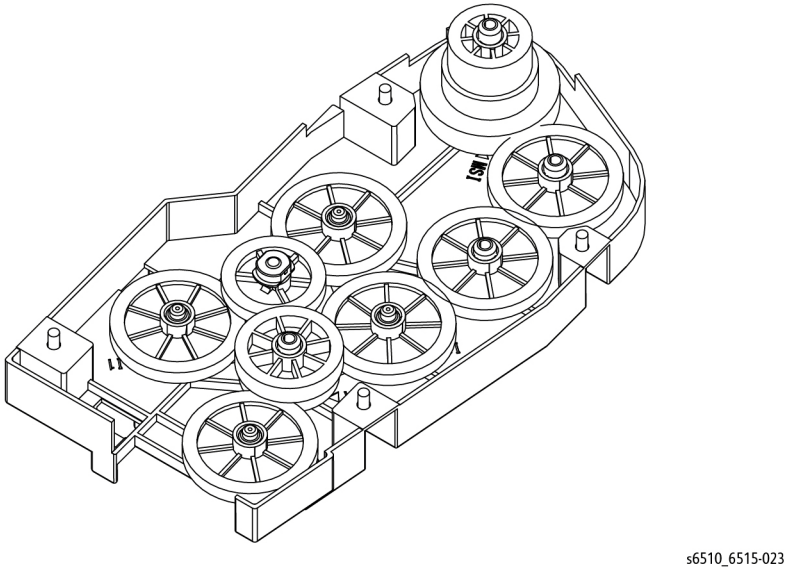

Figure 3 Gear Locations on the MSI Drive Assembly

Replacement

CAUTION

Avoid damaging wires during replacement. When replacing wire harnesses, use factory-installed routes.

REP 3.1.4 Waste Drive Assembly

Parts List on PL 3.1 Item 4

Removal

WARNING

Switch off the electricity to the machine. Disconnect the power cord from the customer supply while performing tasks that do not need electricity. Electricity can cause death or injury. Moving parts can cause injury.

1. Remove the Right Side Cover; REP 19.1.97 (MFP), REP 19.3.97 (SFP).
2. Refer to Figure 1 to remove the three screws (silver, M3X6mm) attaching the Waste Drive and remove the drive.

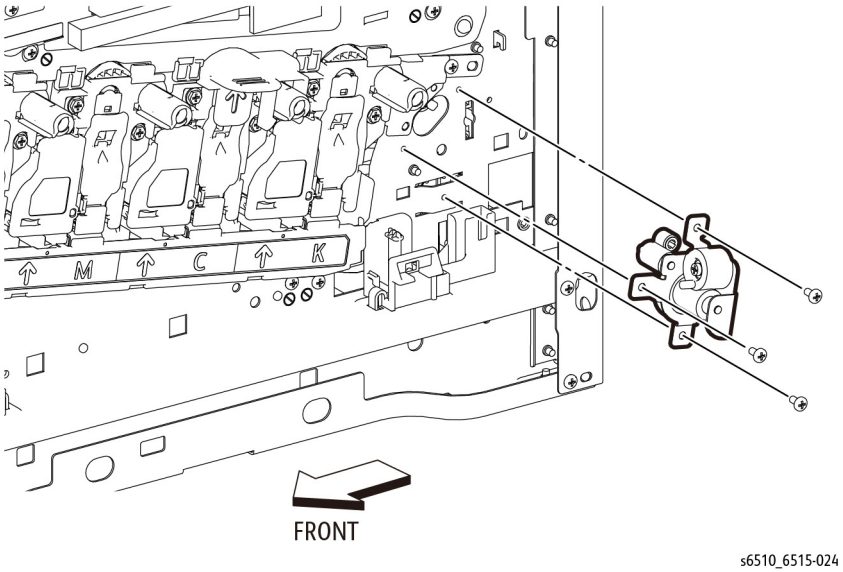

Figure 1 Remove the Waste Drive Assembly

REP 4.1.1 Main Fan

Parts List on PL 4.1 Item 1

Removal

WARNING

Switch off the electricity to the machine. Disconnect the power cord from the customer supply while performing tasks that do not need electricity. Electricity can cause death or injury. Moving parts can cause injury.

CAUTION

To avoid potentially serious problems, follow the procedure shown below and use caution when removing and handling this part. Do not disassemble this part. If replacing, use genuine Xerox parts.

1. Remove the Left Side Cover; REP 19.2.1 (MFP), REP 19.4.1 (SFP).
2. Refer to Figure 1 to unplug connector (P/J289) to the fan.

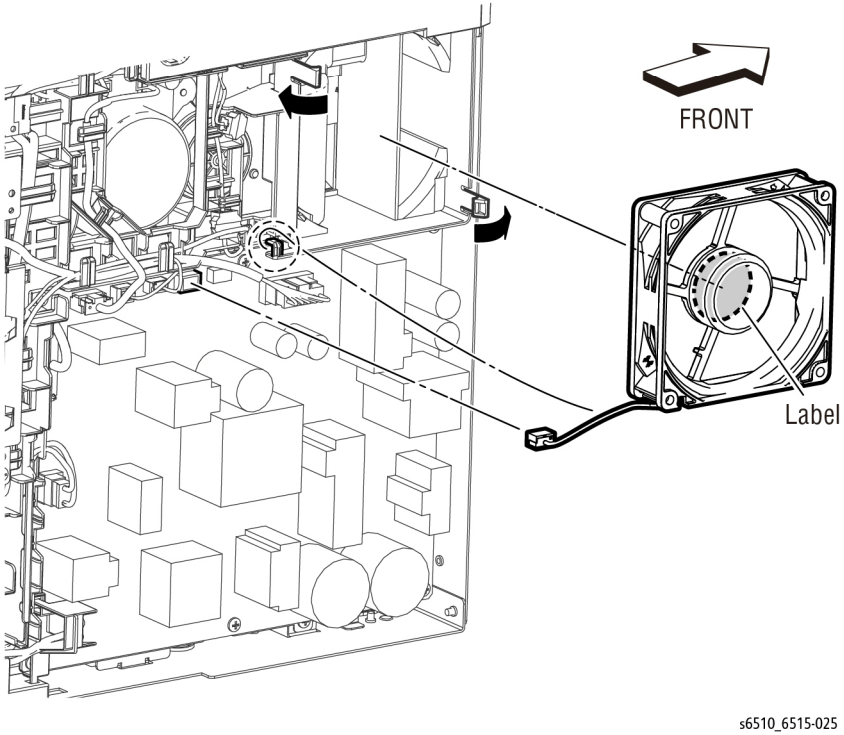

Figure 1 Remove the Main Fan

3. Refer to Figure 1 to release the two hooks attaching the Main Fan to the Main Fan Duct and remove the fan.

Replacement

NOTE: *Note the orientation of the Main Fan, install it so that the label side faces inward.*

REP 4.1.2 Main Fan Duct

Parts List on PL 4.1 Item 2

Removal

WARNING

Switch off the electricity to the machine. Disconnect the power cord from the customer supply while performing tasks that do not need electricity. Electricity can cause death or injury. Moving parts can cause injury.

1. Remove the Left Side Cover; REP 19.2.1 (MFP), REP 19.4.1 (SFP).
2. Remove the Main Fan, REP 4.1.1.
3. Remove the screws from the LVPS Board and Plate to expose the screw attaching the Main Fan Duct shown in Figure 1. If you are removing only the Main Fan Duct, it is not necessary to remove the LVPS Board or Plate.

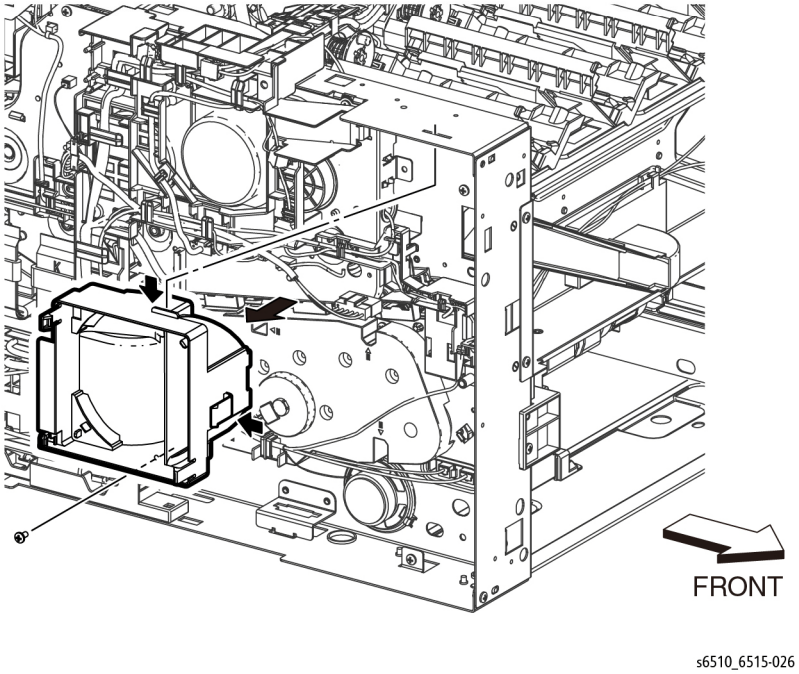

Figure 1 Remove the Main Fan Duct

4. Refer to Figure 1 to remove one screw (silver, M3x6mm) attaching the Main Fan Duct.
5. Release the side hook and the upper boss of the Main Fan Duct and remove the duct.

REP 4.1.99 Foot Assembly Kit

Parts List on PL 4.1 Item 99

Removal

WARNING

Switch off the electricity to the machine. Disconnect the power cord from the customer supply while performing tasks that do not need electricity. Electricity can cause death or injury. Moving parts can cause injury.

CAUTION

To prevent the printer from falling off the workbench in the following steps, position the printer to overhang the edge of the workbench as little as possible.

1. Position the front of the printer to overhang the edge of the workbench.
2. Refer to Figure 1 to replace the front two feet.

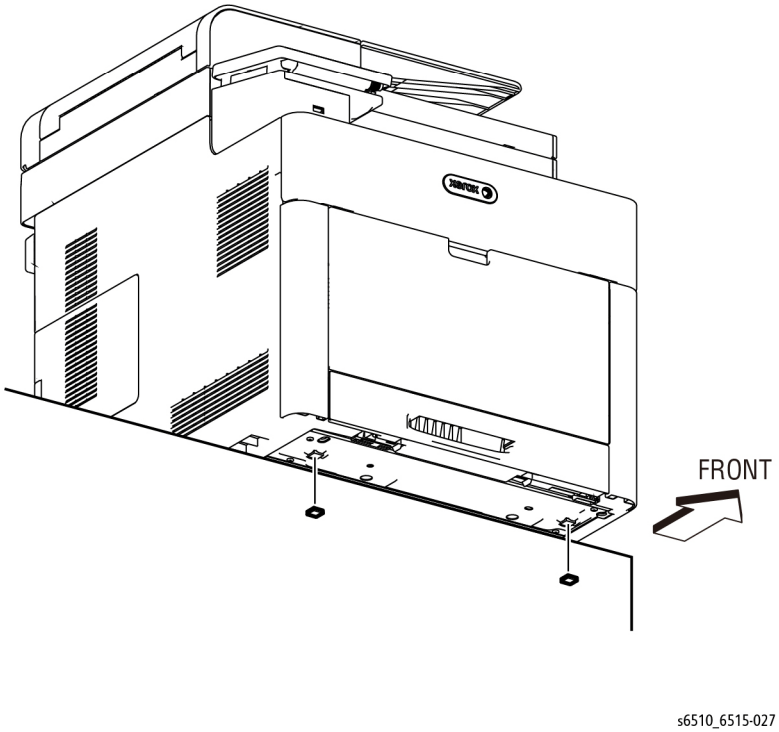

Figure 1 Replace the Front Bottom Feet

3. Position the back of the printer to overhang the edge of the workbench.
4. Refer to Figure 2 to replace the back foot.

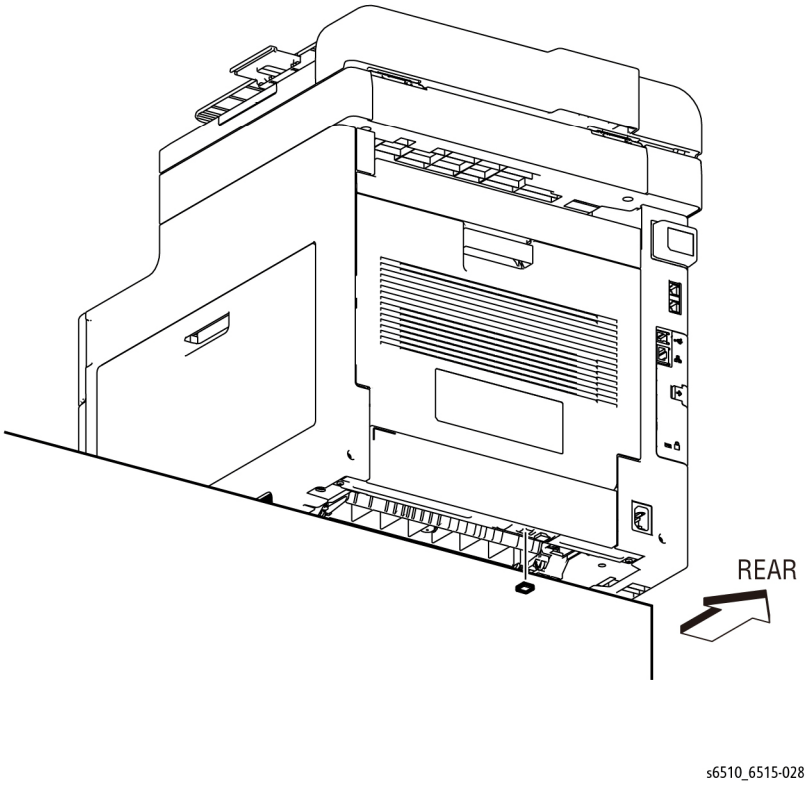

Figure 2 Replace the Rear Bottom Foot

REP 5.1.2 Dispenser Assemblies Y, M, C, K

Parts List on PL 5.1 Item 2, PL 5.1 Item 3, PL 5.1 Item 4, PL 5.1 Item 5

Removal

WARNING

Switch off the electricity to the machine. Disconnect the power cord from the customer supply while performing tasks that do not need electricity. Electricity can cause death or injury. Moving parts can cause injury.

NOTE: *This removal procedure is common among the four Dispenser Assemblies and describes the removal procedure for a single dispenser.*

1. Remove the 250 Sheet Cassette.
2. Remove the Main Bypass Tray, REP 13.2.1.
3. Remove the Drum Cartridge, REP 8.1.1., corresponding to the dispenser being replaced.
4. Remove the Transfer Belt Unit, REP 6.1.1.
5. Remove the Top Cover Assembly; REP 19.1.99 (MFP), REP 19.3.99 (SFP).
6. Remove the Main Exit Drive Assembly, REP 17.1.4.
7. Remove the Dispenser Drive Assembly, REP 5.1.99, except skip step 4 by leaving P/J121, P/J122 connected.
8. Refer to Figure 1 to remove the two screws that attach the RH Brace (supporting the Dispenser Drive Assembly), then rotate the Dispenser Drive Assembly up to the left.

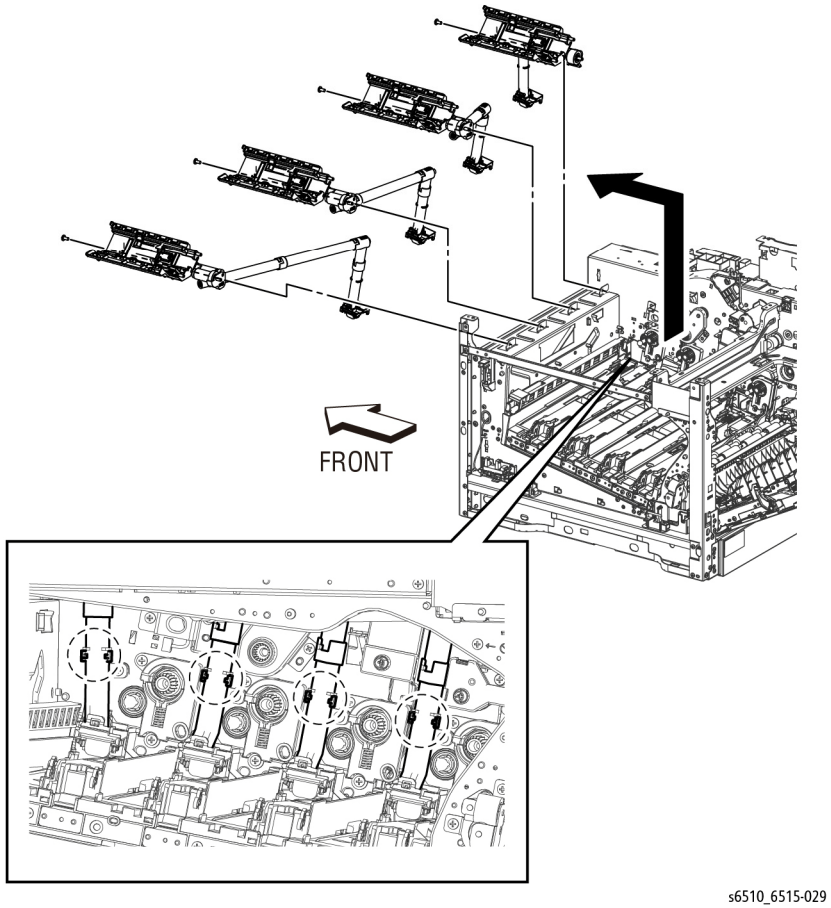

Figure 1 Remove the Dispenser Assemblies

9. Refer to Figure 1 to remove one screw (silver, M3x6mm) from the Dispenser Assembly (one screw for each Dispenser).
10. Refer to Figure 1 to release the hook holding the Dispenser Assembly tube to the left-side printer chassis and remove the Dispenser (one hook for each Dispenser).

REP 5.1.9 Toner Full Sensor

Parts List on PL 5.1 Item 9

Removal

WARNING

Switch off the electricity to the machine. Disconnect the power cord from the customer supply while performing tasks that do not need electricity. Electricity can cause death or injury. Moving parts can cause injury.

1. Remove the Right Side Cover; REP 19.1.97 (MFP), REP 19.3.97 (SFP).
2. Refer to Figure 1 to release the three hooks on the Clear Cover starting with the bottom hook and remove the cover.

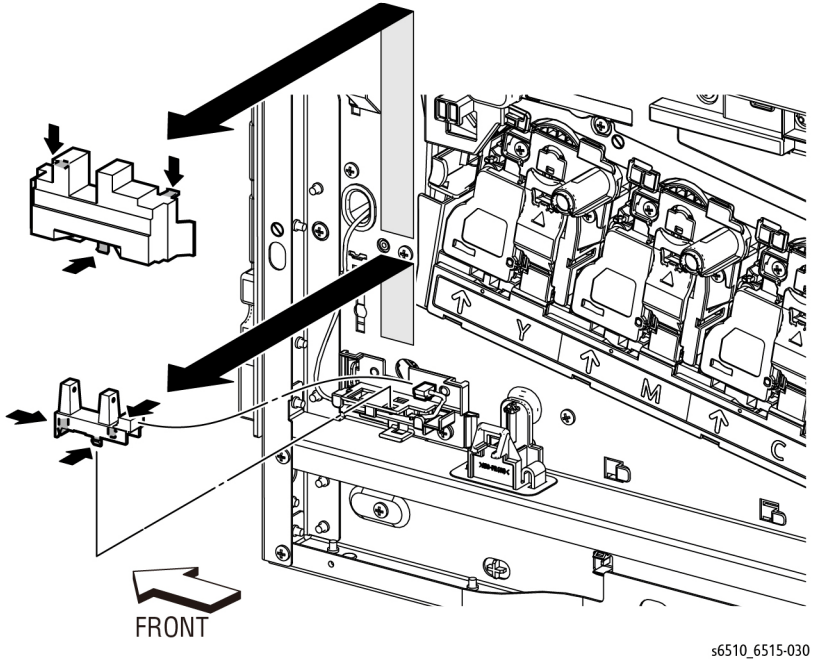

Figure 1 Remove the Toner Full Sensor

3. Refer to Figure 1 to release the three hooks attaching the Toner Full Sensor to the sensor holder and remove the sensor.
4. Refer to Figure 1 to unplug the connector (P/J485) from the sensor.

REP 5.1.99 Dispenser Drive Assembly Kit

Parts List on PL 5.1 Item 99

Removal

WARNING

Switch off the electricity to the machine. Disconnect the power cord from the customer supply while performing tasks that do not need electricity. Electricity can cause death or injury. Moving parts can cause injury.

1. Remove all four of the Toner Cartridges.
2. Remove the Top Cover Assembly; REP 19.1.99 (MFP), REP 19.3.99 (SFP).
3. Remove the Main Exit Drive Assembly, REP 17.1.4.
4. Refer to Figure 1 to unplug the four connectors (P/J111, P/J112, P/J113, P/J114) and release the Toner CRUM Harness Assembly.

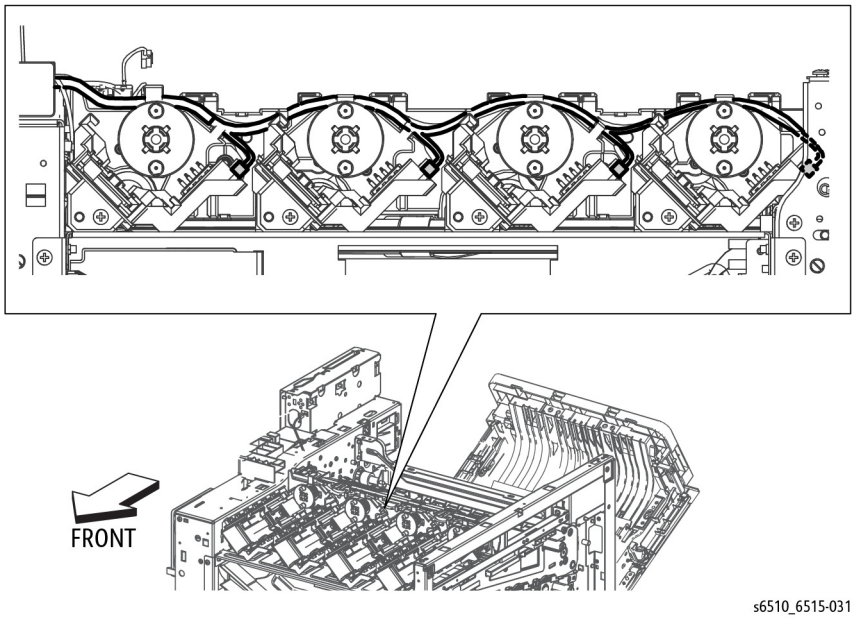

Figure 1 Release the Toner CRUM Harness Assembly

5. Refer to Figure 2 to unplug the two connectors (P/J110, P/J120) from the Dispenser Drive Harness Assembly and release the harnesses from the harness guide.

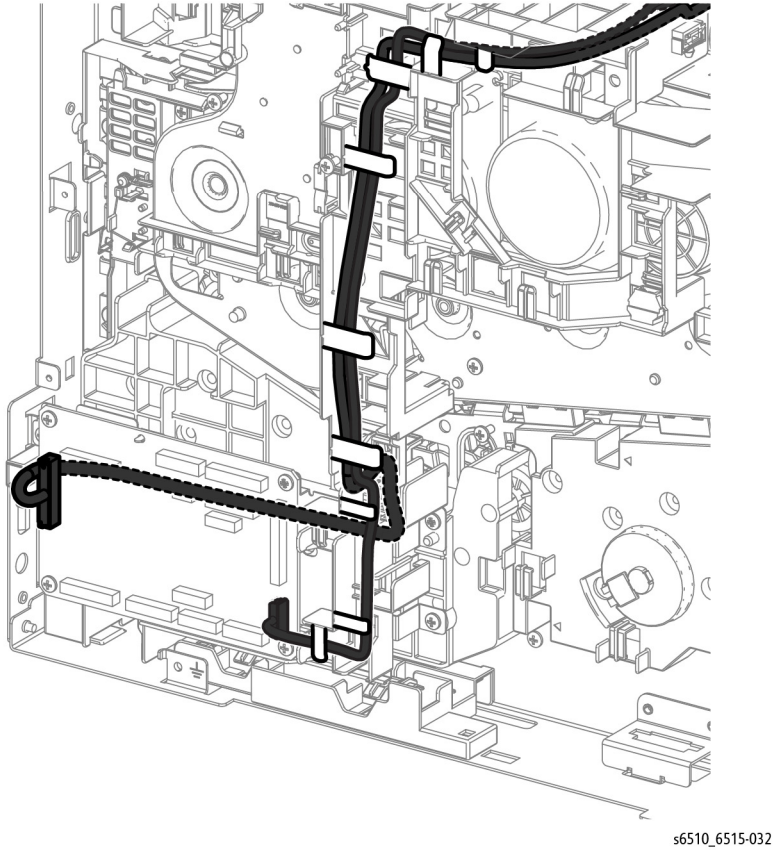

Figure 2 Release the Dispenser Drive Harnesses

6. Refer to Figure 3 to remove the two screws (silver, M3x6mm) attaching the Dispenser Drive Assembly and remove the drive.

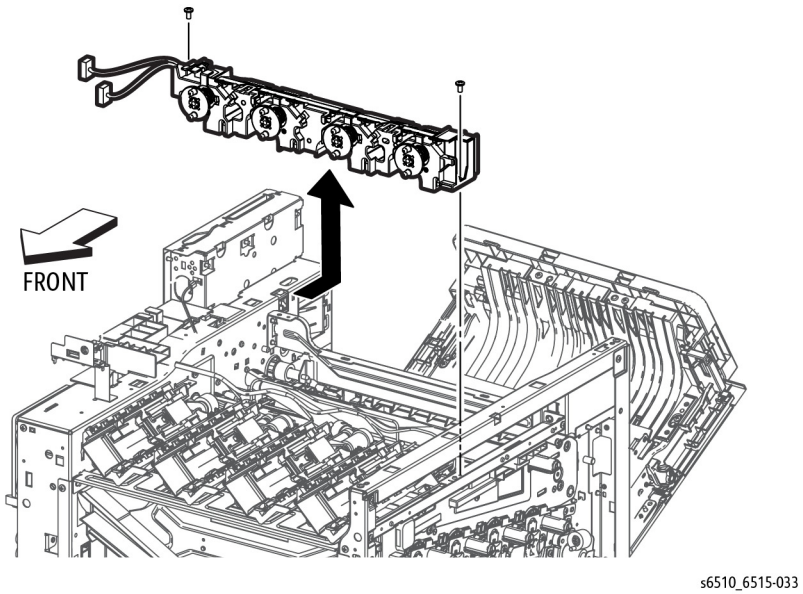

Figure 3 Remove the Dispenser Drive Assembly

REP 6.1.1 Transfer Belt Unit

Parts List on PL 6.1 Item 1

Removal

WARNING

Switch off the electricity to the machine. Disconnect the power cord from the customer supply while performing tasks that do not need electricity. Electricity can cause death or injury. Moving parts can cause injury.

1. Open the Waste Cover.
2. Remove the Waste Cartridge, REP 8.1.5.
3. Open the Rear Cover.
4. Release the lever on each of the CRU Drum Cartridges (Y,M,C,K).

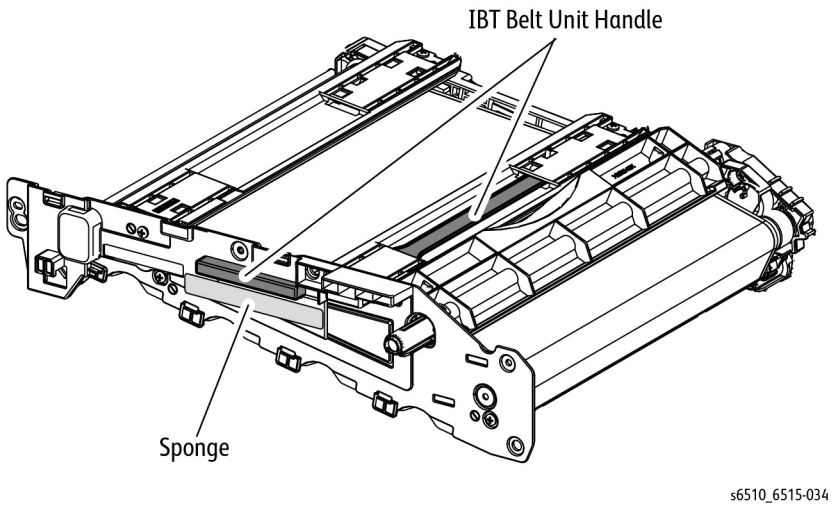

Figure 1 Handle Locations on the Transfer Belt Unit

NOTE: *In the following step, do not grasp the foam on Transfer Belt Unit Cover when replacing the Transfer Unit. Grasp the Transfer Belt Unit Handles (see Figure 1).*

5. Refer to Figure 2 to remove the four screws attaching the Transfer Belt Unit and remove the Transfer Belt Unit from the rails. Remove only the screws seated against the metal frame as shown in the figure.

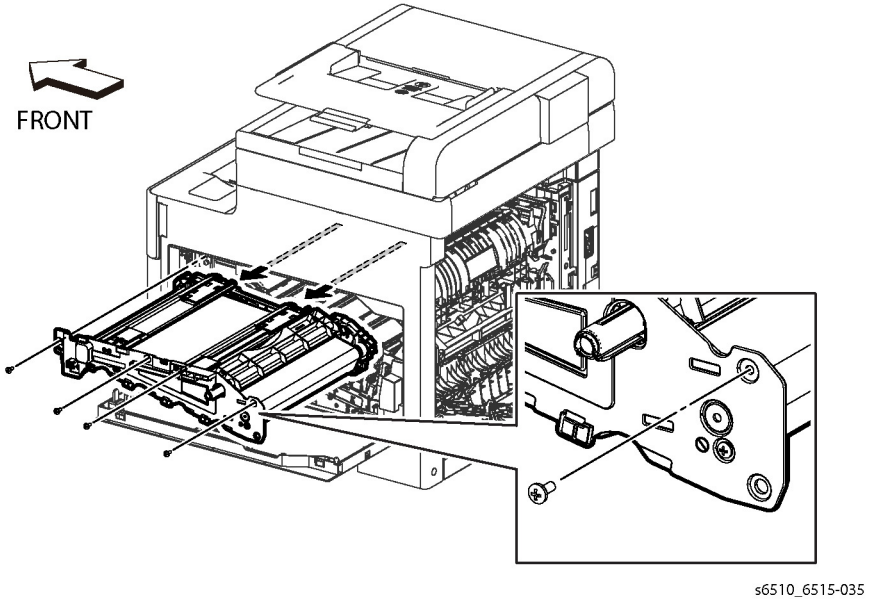

Figure 2 Remove the Transfer Belt Unit

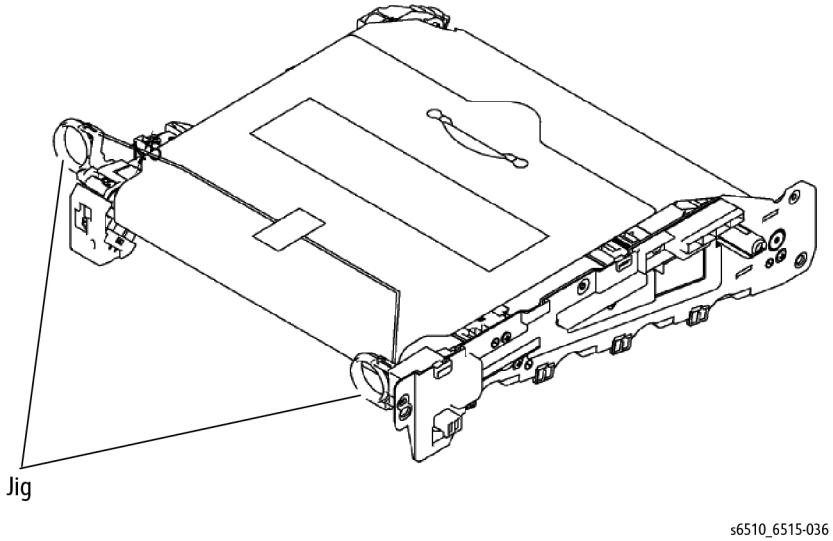

Figure 3 Remove Jigs before Installing a New Transfer Belt Unit

Replacement

Do not grasp the foam on Transfer Belt Unit Cover when replacing the Transfer Belt Unit. Grasp the Transfer Belt Unit Cover Handles (see Figure 1).

When installing a new Transfer Belt Unit, remove two jigs (shipping restraints) from the unit (see Figure 3).

REP 6.1.8 Color Toner Density (CTD) Sensor Assembly

Parts List on PL 6.1 Item 8

Removal

WARNING

Switch off the electricity to the machine. Disconnect the power cord from the customer supply while performing tasks that do not need electricity. Electricity can cause death or injury. Moving parts can cause injury.

1. Remove the 250 Cassette Assembly.
2. Remove the Right Side Cover, REP 19.1.97.
3. Remove the Drum Cartridges, REP 8.1.1.
4. Remove the Transfer Belt Unit, REP 6.1.1.
5. Remove the Guide Cover Assembly, REP 2.1.11.
6. Remove the Rear Cover; REP 19.2.99 (MFP), REP 19.4.99 (SFP).
7. Remove the Registration Chute Feeder Assembly, REP 15.2.1.
8. Refer to Figure 1 to remove the one screw (silver, M3x6mm) attaching the Sensor Cover and remove the cover.

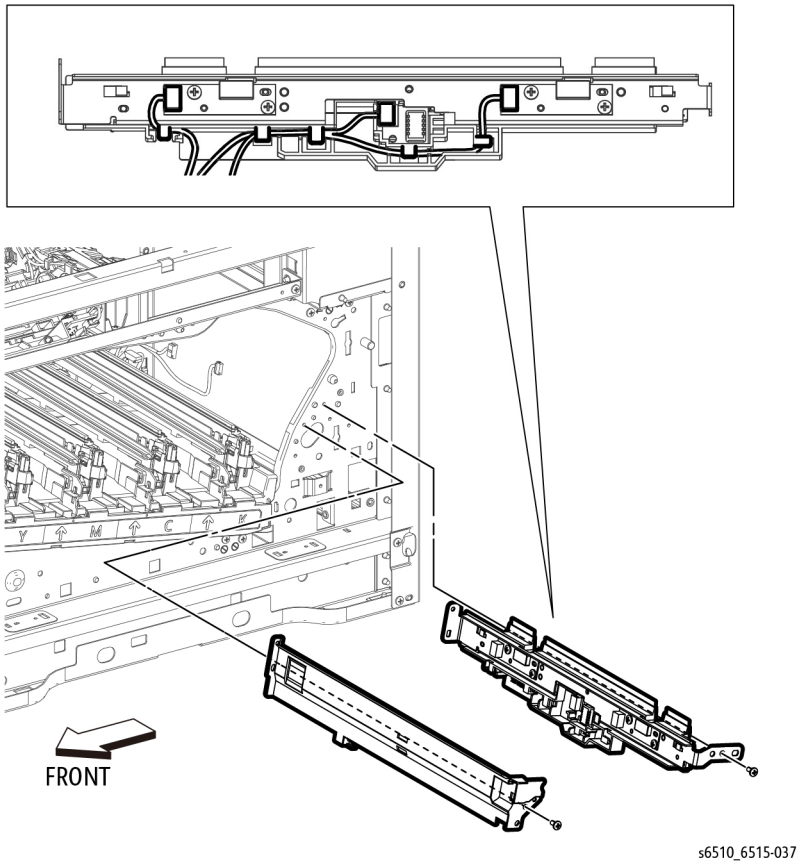

Figure 1 Remove the CTD Sensor Assembly

9. Refer to Figure 1 to unplug the three sensor connectors (P/J142, P/J143, P/J145) and release the cable.
10. Refer to Figure 1 to remove the one screw (silver, M3x6mm) attaching the CTD Sensor Assembly, and remove the sensor.

REP 6.1.11 Photo Sensor (K-Mode)

Parts List on PL 6.1 Item 11

Removal

WARNING

Switch off the electricity to the machine. Disconnect the power cord from the customer supply while performing tasks that do not need electricity. Electricity can cause death or injury. Moving parts can cause injury.

1. Remove the Transfer Belt Unit, REP 6.1.1.
2. Remove the Drum Cartridge, REP 8.1.1.
3. Refer to Figure 1 to remove the Photo Sensor.
4. Unplug the connector (P/J466) from the Photo Sensor.

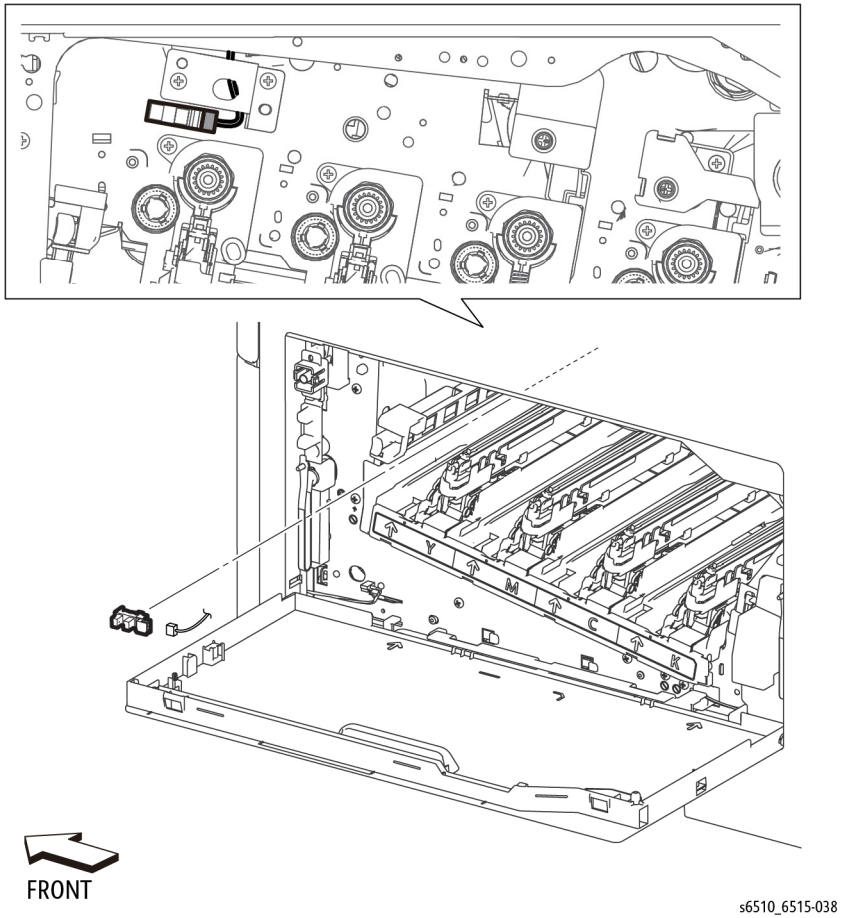

Figure 1 Remove the Photo Sensor

Replacement

1. Attach the connector (P/J466) to the Photo Sensor.
2. Engage hook towards the front of the printer first, then press in the remaining hooks.

REP 7.1.1 Fuser Assembly

Parts List on PL 7.1 Item 1

Removal

WARNING

Switch off the electricity to the machine. Disconnect the power cord from the customer supply while performing tasks that do not need electricity. Electricity can cause death or injury. Moving parts can cause injury.

CAUTION

To avoid potentially serious problems, follow the procedure shown below and use caution when removing and handling this part. Do not disassemble this part. If replacing, use genuine Xerox parts.

WARNING

The Fuser is very hot. Take added care when handling the Fuser to avoid being burned.

1. Remove the Fuser Harness Cover, REP 7.1.2.
2. Refer to Figure 1 to remove the two screws (silver, M3x8mm with spring washer and flat washer) attaching the Fuser Assembly.

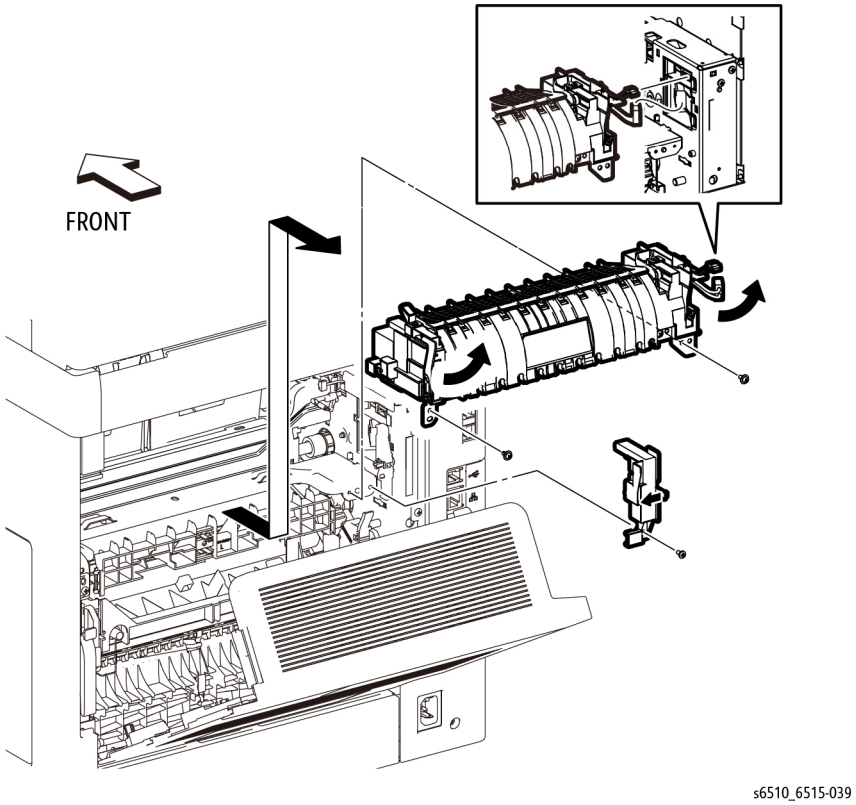

Figure 1 Remove the Fuser

3. Refer to Figure 1 to unplug the connectors (P/J273,P/J275) and remove the Fuser Assembly.

Replacement

CAUTION

When installing the Fuser Harness Cover, avoid damaging the cable passing through the Fuser housing. Follow the harness routing shown in Figure 2.

NOTE: *When replacing or re-installing the Fuser, attach the connectors (P/J273,P/J275) first, then place the Fuser into its position.*

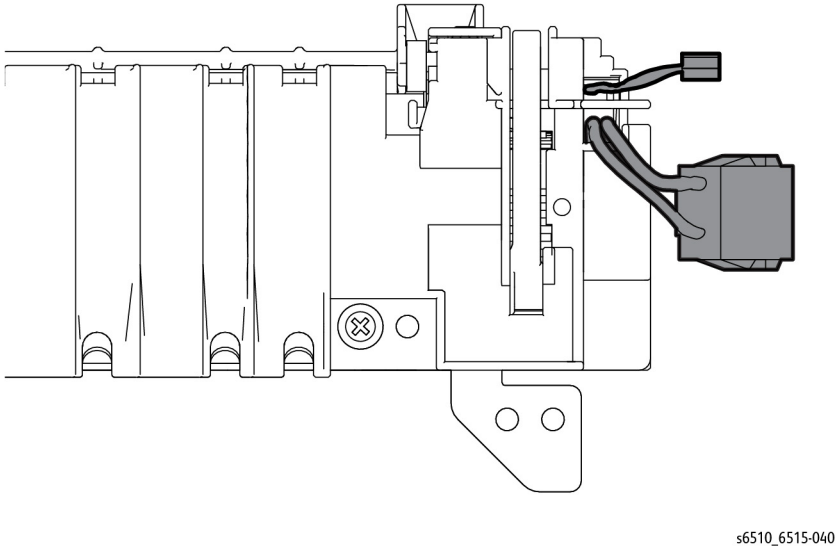

Figure 2 Avoid Pinching Wires

REP 7.1.2 Fuser Harness Cover

Parts List on PL 7.1 Item 2

Removal

WARNING

Switch off the electricity to the machine. Disconnect the power cord from the customer supply while performing tasks that do not need electricity. Electricity can cause death or injury. Moving parts can cause injury.

WARNING

The Fuser is very hot. Take added care when handling the Fuser to avoid being burned.

1. Open the Rear Cover.
2. Refer to Figure 1 to remove the one screw (silver, M3x6mm) attaching the lower end of the Fuser Harness Cover to the Fuser Assembly.

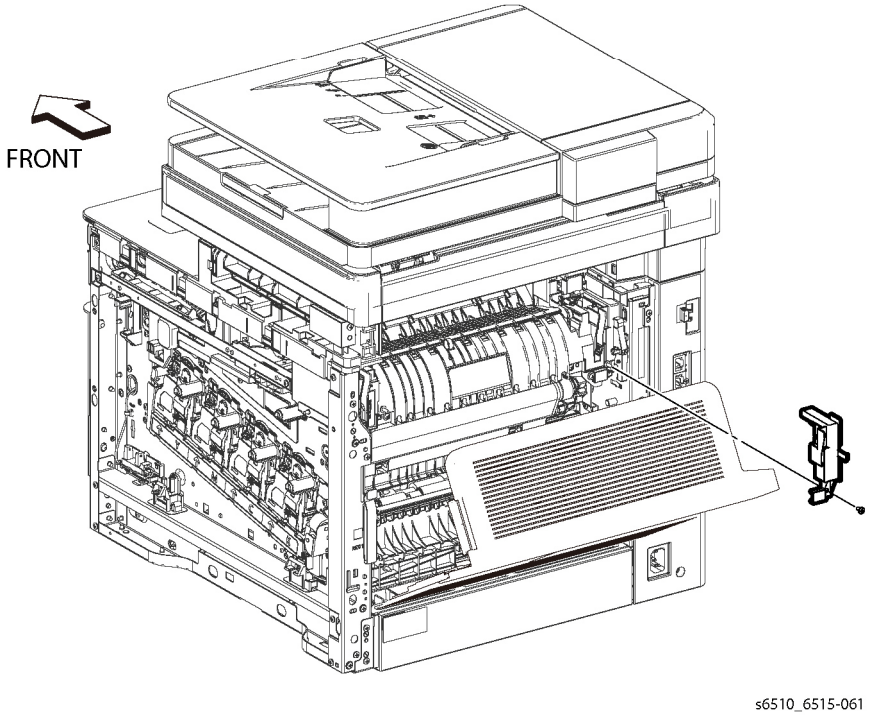

Figure 1 Remove the Fuser Harness Cover

3. Release the hook and remove the Fuser Harness Cover. The Fuser Assembly can be removed after removing the Fuser Harness Cover.

REP 8.1.1 Drum Cartridge Y, M, C, K CRU

Parts List on PL 8.1 Item 1, PL 8.1 Item 2, PL 8.1 Item 3, PL 8.1 Item 4

Removal

WARNING

Switch off the electricity to the machine. Disconnect the power cord from the customer supply while performing tasks that do not need electricity. Electricity can cause death or injury. Moving parts can cause injury.

NOTE: *Since the removal procedure is common for all four Drum Cartridge, this section describes the removal procedure for only the Y Assembly.*

1. Remove the Waste Cartridge, REP 8.1.5.

CAUTION

Imaging Units are sensitive to, and can be damaged by, exposure to light. Be sure to store the Imaging Units in a dark location.

2. Refer to Figure 1 to release the lever on the Drum Cartridge, then slide the assembly straight out.

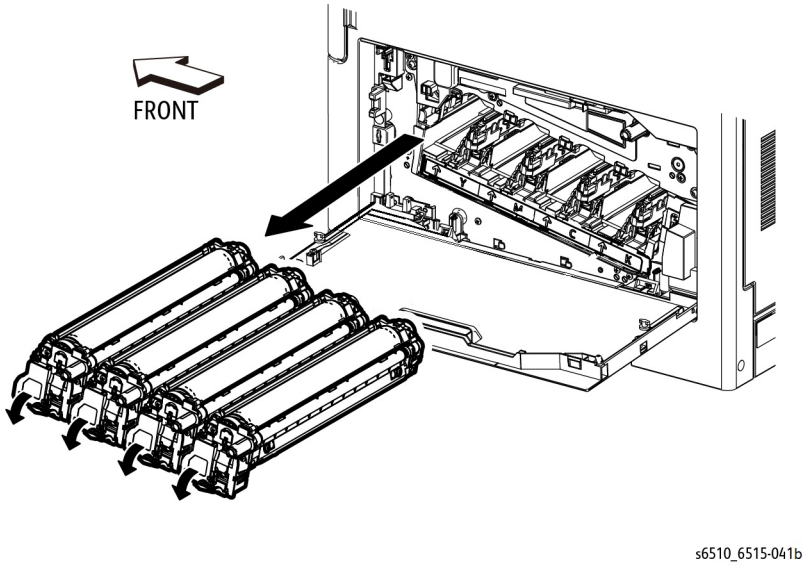

Figure 1 Remove the Drum Cartridge

REP 8.1.5 Waste Cartridge Assembly

Parts List on PL 8.1 Item 5

Removal

WARNING

Switch off the electricity to the machine. Disconnect the power cord from the customer supply while performing tasks that do not need electricity. Electricity can cause death or injury. Moving parts can cause injury.

1. Open the Waste Cover on the right side.

CAUTION

In the following step, avoid allowing toner to spill from the Waste Cartridge. When handling the Waste Cartridge keep the holes facing up.

2. Refer to Figure 1 to remove the Waste Cartridge by depressing the tab and pulling the Cartridge out in the direction shown.

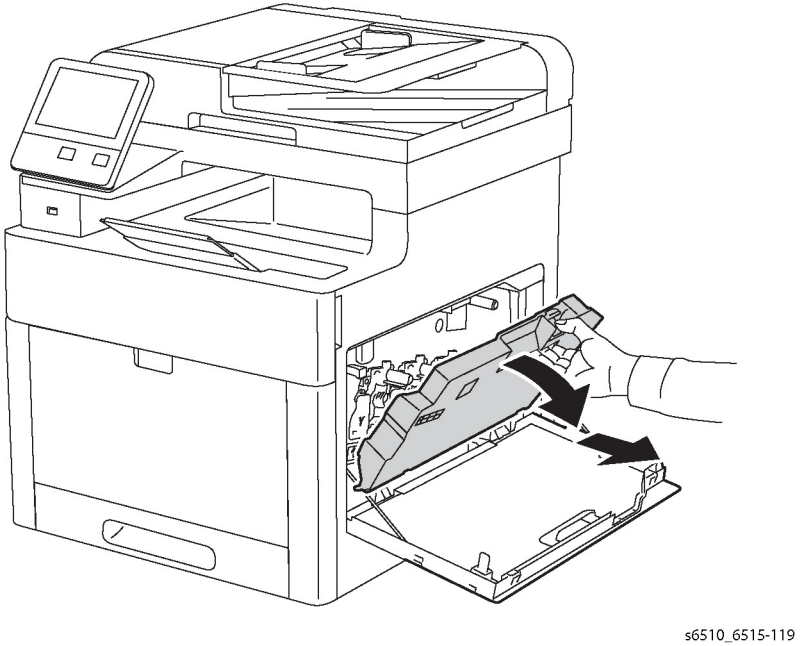

Figure 1 Remove the Waste Cartridge

REP 8.1.6 LPH Cleaner Assembly

Parts List on PL 8.1 Item 6

Removal

WARNING

Switch off the electricity to the machine. Disconnect the power cord from the customer supply while performing tasks that do not need electricity. Electricity can cause death or injury. Moving parts can cause injury.

1. Remove the Waste Cartridge, REP 8.1.5.
2. Refer to Figure 1 to pull out the Cleaner Assembly.

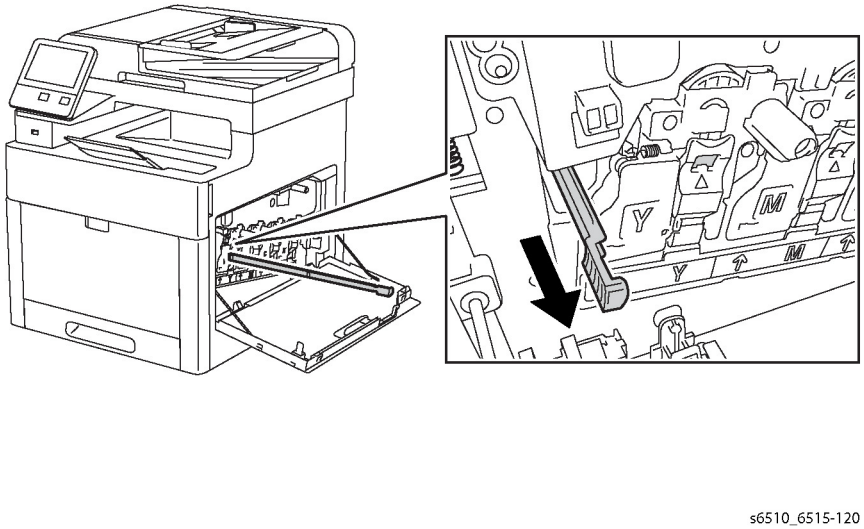

Figure 1 Remove the LPH Cleaner Assembly

REP 9.1.1 IOT 250 Cassette Assembly

Parts List on PL 9.1 Item 1

Removal

WARNING

Switch off the electricity to the machine. Disconnect the power cord from the customer supply while performing tasks that do not need electricity. Electricity can cause death or injury. Moving parts can cause injury.

CAUTION

To avoid potentially serious problems, follow the procedure shown below and use caution when removing and handling this part. Do not disassemble this part. If replacing, use genuine Xerox parts.

1. Refer to Figure 1 to remove the 250 Cassette Assembly from the printer.

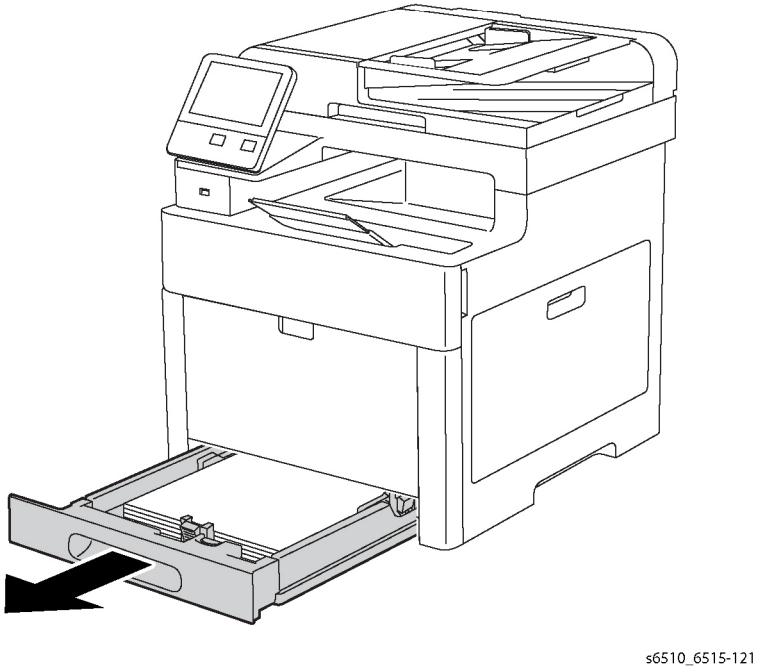

Figure 1 Remove the 250 Cassette Assembly

REP 9.1.11 Legal Paper Tray Cover

Parts List on PL 9.1 Item 11

Removal

WARNING

Switch off the electricity to the machine. Disconnect the power cord from the customer supply while performing tasks that do not need electricity. Electricity can cause death or injury. Moving parts can cause injury.

1. Remove the 250 Cassette Assembly from the printer.
2. Refer to Figure 1 to release the latches that hold the Legal Paper Tray Cover to the cassette, and remove the Cover.

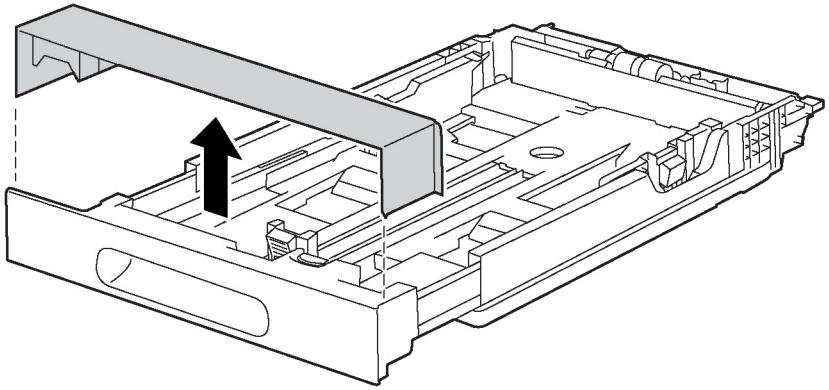

s6510_6515-122

Figure 1 Remove the Legal Paper Tray Cover

REP 9.1.98 Cassette Separator Rollers Kit

Parts List on PL 9.1 Item 98

Removal

WARNING

Switch off the electricity to the machine. Disconnect the power cord from the customer supply while performing tasks that do not need electricity. Electricity can cause death or injury. Moving parts can cause injury.

1. Remove the 250 Cassette Assembly from the printer.
2. Refer to Figure 1 to release the hook at the end of the Cassette Separator Holder, then lift the holder in the direction of the arrow.

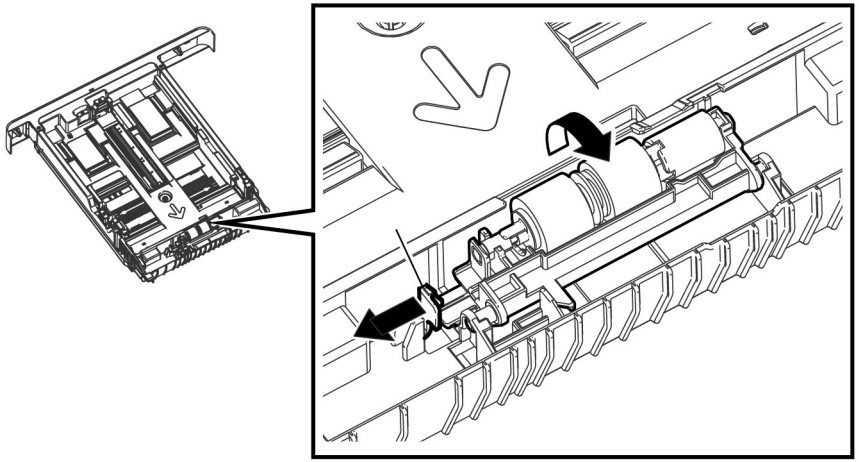

s6510_6515-042

Figure 1 Release the Cassette Separator Holder Hook

3. Refer to Figure 2 to remove the Cassette Separator Holder in the direction of the arrow.

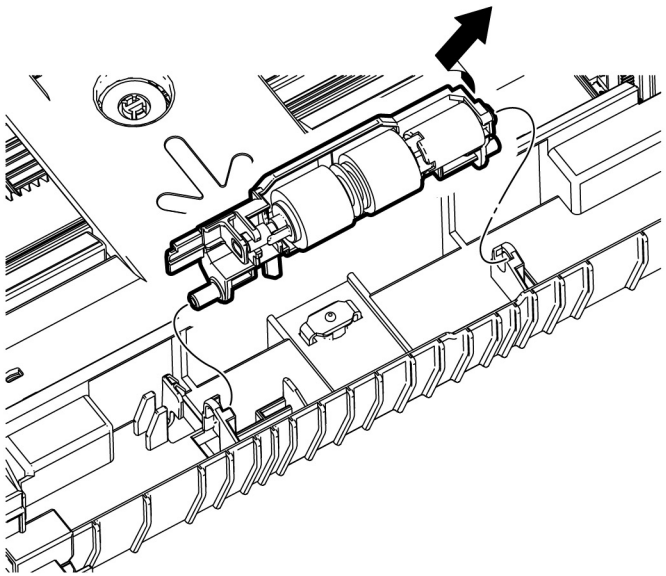

s6510_6515-043

Figure 2 Remove the Cassette Separator Roller Assembly

REP 10.1.1 550 Option Feeder Assembly Kit

Parts List on PL 10.1 Item 1

Removal

WARNING

Switch off the electricity to the machine. Disconnect the power cord from the customer supply while performing tasks that do not need electricity. Electricity can cause death or injury. Moving parts can cause injury.

1. Refer to Figure 1 to slide the lever and release the two hooks attaching the 550 Option Feeder Assembly.

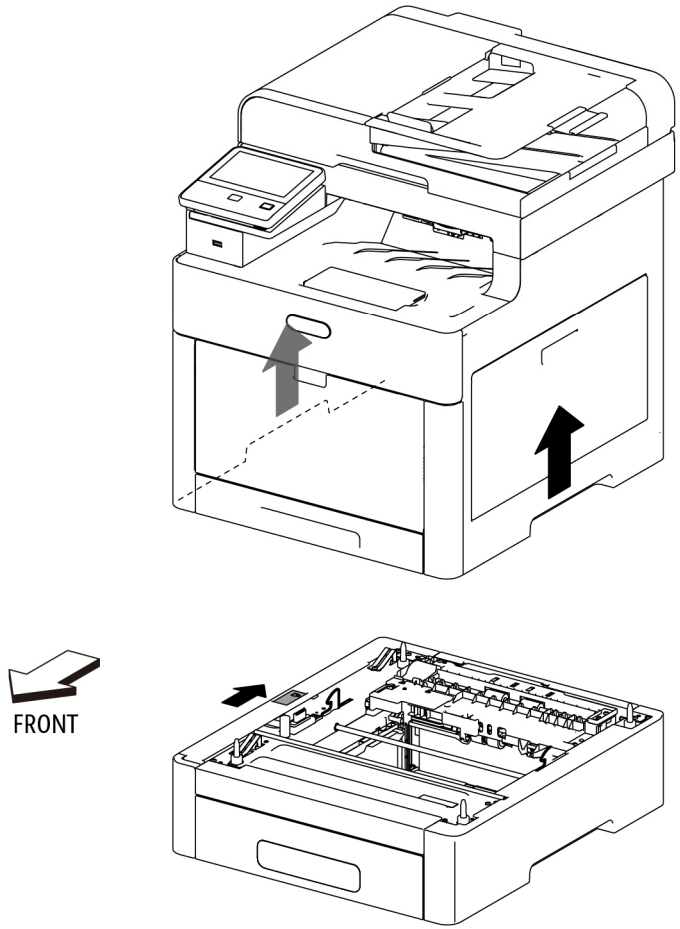

s6510_6515-044

Figure 1 Remove the 550 Option Feeder Assembly

WARNING

Do not attempt to remove or lift the following component with less than 2 people. The component is very heavy and requires at least 2 people to lift or remove it. Any attempt to remove or lift the component with less than 2 people could result in serious personal injury.

2. Raise the printer while holding the recessed areas on both sides, and separate it from the 550 Option Feeder Assembly.

REP 10.1.2 550 Option Feeder Left Side Cover

Parts List on PL 10.1 Item 2

Removal

WARNING

Switch off the electricity to the machine. Disconnect the power cord from the customer supply while performing tasks that do not need electricity. Electricity can cause death or injury. Moving parts can cause injury.

1. Remove the 550 Option Feeder Assembly from the printer, REP 10.1.1.

CAUTION

In the following step, avoid tearing off the LED Harness Assembly by gently pulling off the Option Feeder Left Front Cover.

2. Refer to Figure 1 to push the hook at the bottom of the Option Feeder Left Front Cover, and release the cover.

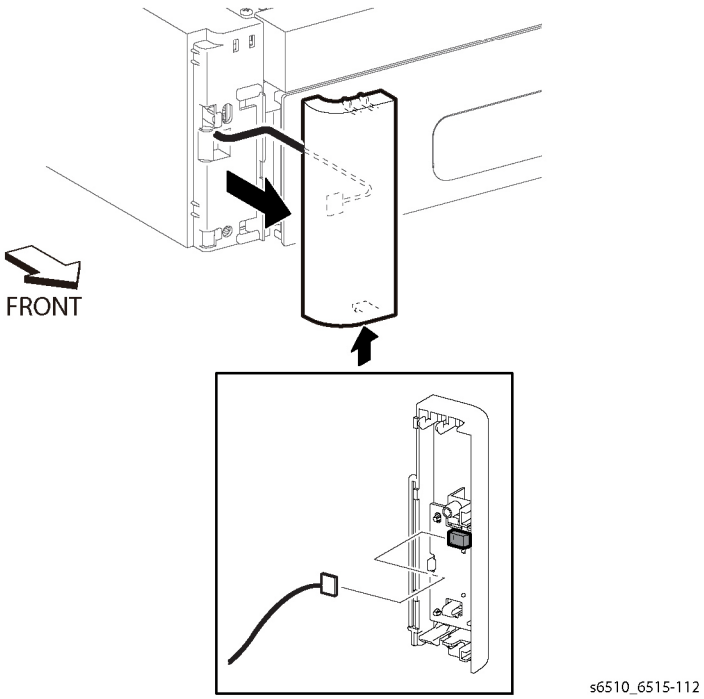

Figure 1 Remove the 550 Option Feeder Left Front Cover

3. Unplug the connector (P/J814) from the Left Front Cover.
4. Refer to Figure 2 to remove the one screw (silver, M3x6mm) attaching the Left Side Cover to the feeder.

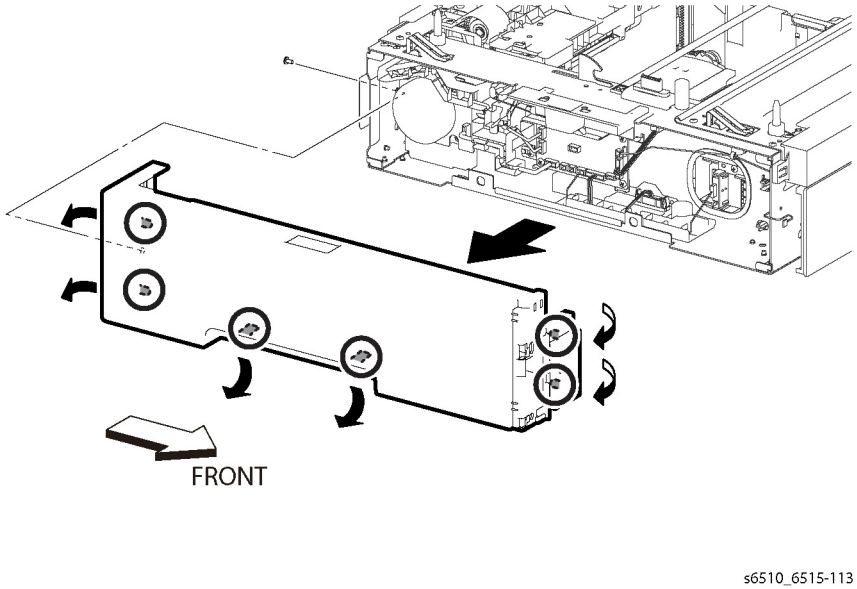

Figure 2 Remove the 550 Option Feeder Left Side Cover

5. Refer to Figure 2 of the Left Side Cover to release, in order, two bosses at the rear side, two hooks at the bottom, and two bosses at the front side.
6. Remove the Left Side Cover from the feeder.

Replacement

NOTE: *Before installing the Option Feeder Left Side Cover, set the Option Feeder Lock Assembly to the lock position as shown in Figure 3.*

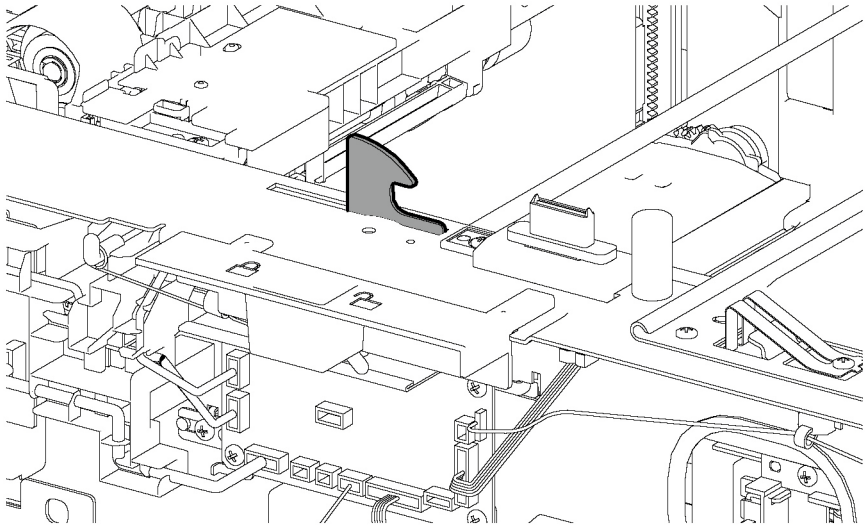

Figure 3 Place the Option Feeder Lock into Locked Position

REP 10.1.10 550 OPF Foot

Parts List on PL 10.1 Item 10

Removal

WARNING

Switch off the electricity to the machine. Disconnect the power cord from the customer supply while performing tasks that do not need electricity. Electricity can cause death or injury. Moving parts can cause injury.

1. Remove the 550 Option Feeder Assembly from the printer, REP 10.1.1.
2. Remove the 550 Option Cassette from the 550 Option Feeder, REP 10.3.1.
3. Refer to Figure 1 for locations to hold the 550 Option Feeder Assembly, then turn over the feeder.

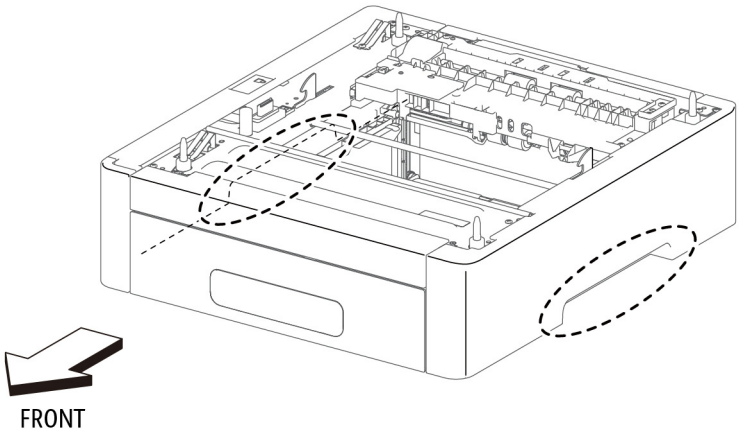

s6510_6515-045

Figure 1 Locations to Hold the 550 Option Feeder

4. Refer to Figure 2 to remove the screw (silver, M3x6mm) attaching each foot to the 550 Option Feeder Assembly.

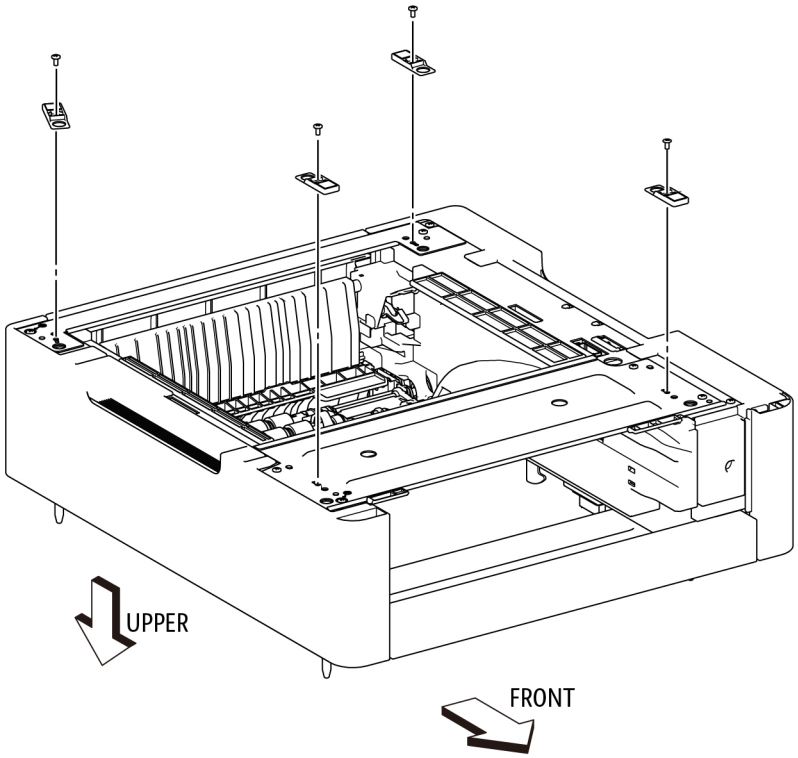

s6510_6515-046

Figure 2 Remove the 550 Option Feeder Feet

REP 10.1.98 LED Harness Assembly Kit

Parts List on PL 10.1 Item 98

Removal

WARNING

Switch off the electricity to the machine. Disconnect the power cord from the customer supply while performing tasks that do not need electricity. Electricity can cause death or injury. Moving parts can cause injury.

1. Remove the 550 Option Feeder Assembly from the printer, REP 10.1.1.

CAUTION

In the following step, avoid tearing off the LED Harness Assembly by gently pulling off the Option Feeder Left Front Cover.

2. Refer to Figure 1 to remove the Option Feeder Left Front Cover.

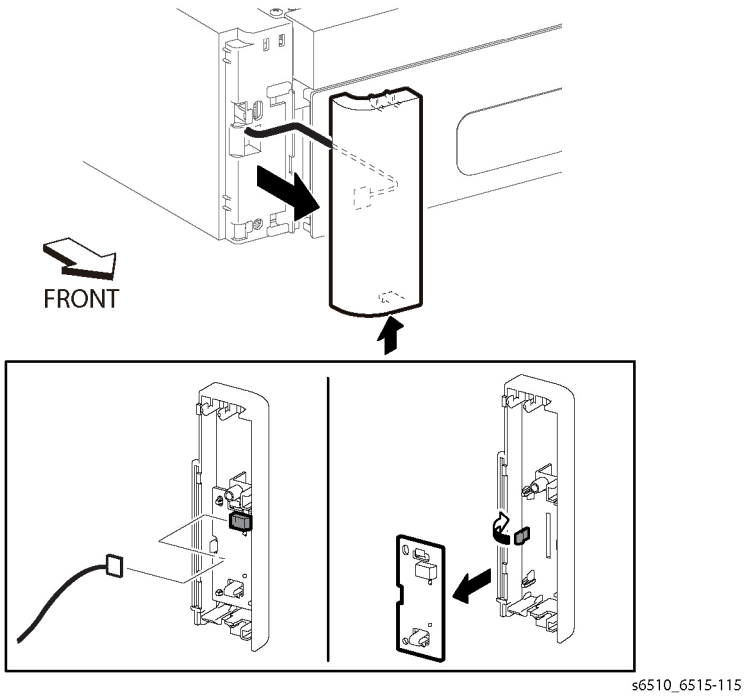

Figure 1 Remove the 550 Option Feeder Left Front Cover

3. Unplug the connector (P/J814) from the Left Front Cover.
4. Refer to Figure 1 to release the hook and remove the LED Tray Assembly.
5. Remove the 550 Option Feeder Left Side Cover, REP 10.1.2.
6. Refer to Figure 2 to unplug the connector (P/J813), remove two clamps, and remove the LED Harness Assembly.

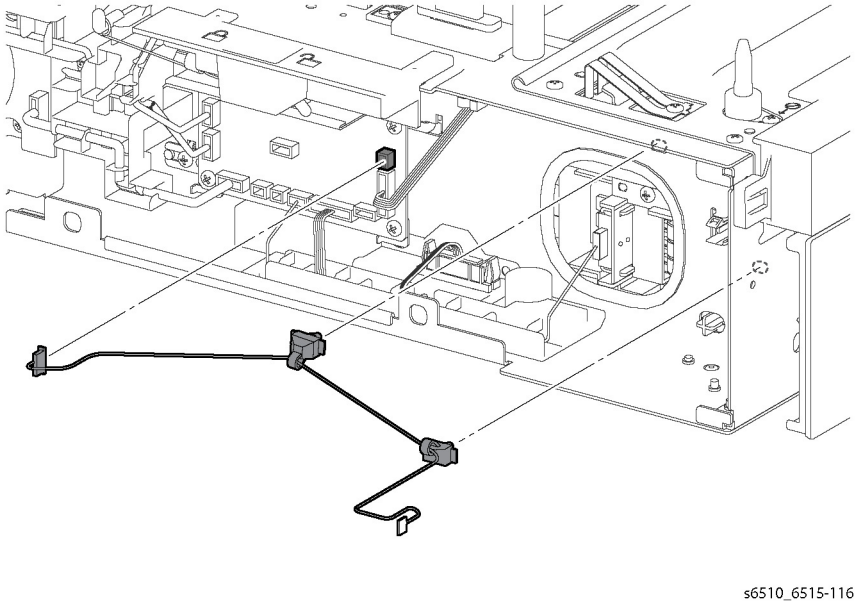

Figure 2 Remove the LED Harness Assembly

Replacement

CAUTION

Avoid damaging wires during replacement. When replacing wire harnesses, use factory-installed routes.

NOTE: *Before installing the Option Feeder Left Side Cover, set the Option Feeder Lock Assembly to the lock position as shown in Figure 3.*

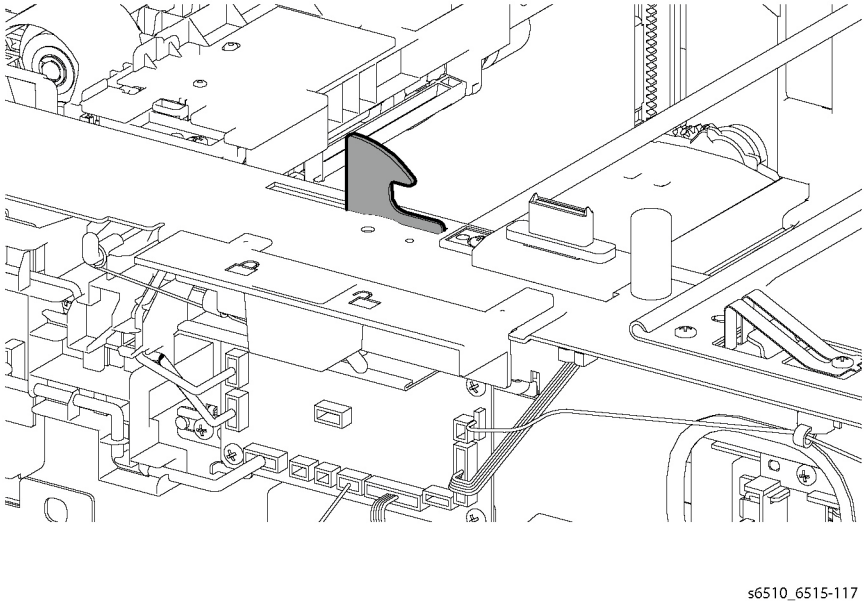

Figure 3 Place the Option Feeder Lock into Locked Position

REP 10.2.8 No Paper Actuator (Optional Feeder)

Parts List on PL 10.2 Item 8

Removal

WARNING

Switch off the electricity to the machine. Disconnect the power cord from the customer supply while performing tasks that do not need electricity. Electricity can cause death or injury. Moving parts can cause injury.

NOTE: *Depending on printer installation circumstances, consider removing the No Paper Actuator without separating the Option Feeder from the printer. Refer to REP 15.2.2 for a figure showing removal in the right-side up orientation.*

1. Remove the 550 Option Feeder Assembly, REP 10.1.1.
2. Remove the 550 Option Cassette from the 550 Option Feeder, REP 10.3.1.
3. Referring to Figure 1 for locations to hold the 550 Option Feeder Assembly, turn over the feeder.

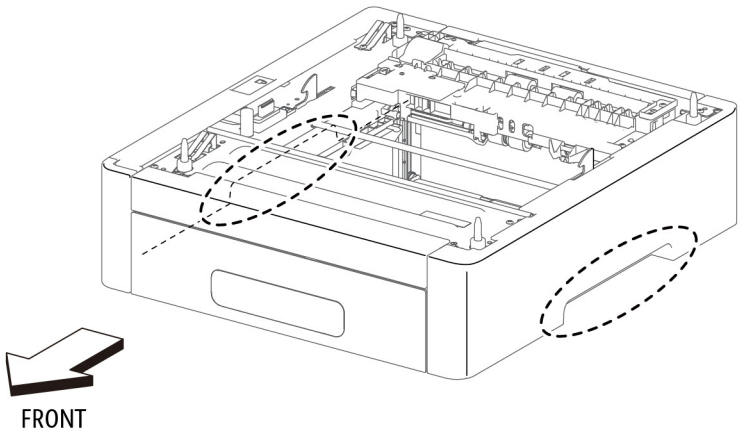

Figure 1 Locations to Hold the 550 Option Feeder

4. Refer to Figure 2 to release the portion A of the No Paper Actuator in the direction of the arrow and fully rotate the actuator.

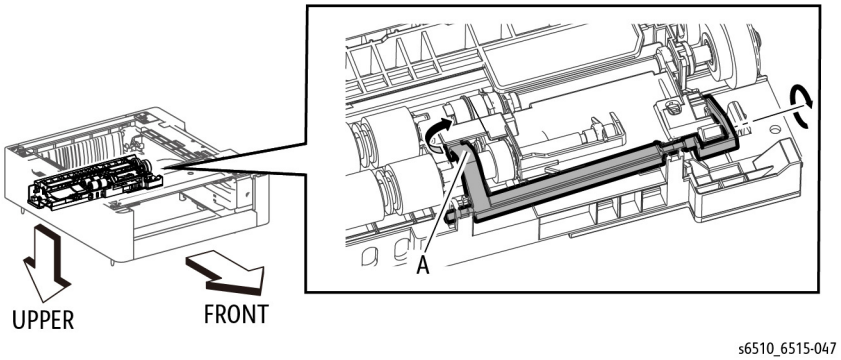

Figure 2 Release the No Paper Actuator

5. Referring to Figure 3, with the No Paper Actuator fully rotated out of its home position, remove the No Paper Actuator.

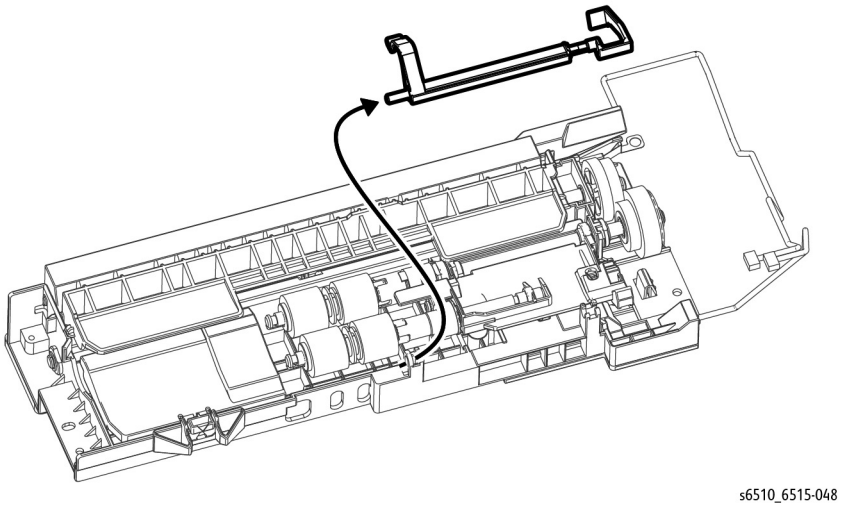

Figure 3 Remove the No Paper Actuator

Replacement

When replacing the No Paper Actuator, make sure to snap portion A shown in Figure 2 back into its original position.

REP 10.2.99 Feed Roller Assembly Kit (Optional Feeder)

Parts List on PL 10.2 Item 99

Removal

WARNING

Switch off the electricity to the machine. Disconnect the power cord from the customer supply while performing tasks that do not need electricity. Electricity can cause death or injury. Moving parts can cause injury.

1. Remove the 550 Option Feeder Assembly from the printer, REP 10.1.1.
2. Remove the 550 Option Cassette from the 550 Option Feeder, REP 10.3.1.
3. Referring to Figure 1 for locations to hold the 550 Option Feeder Assembly, turn over the 550 Option Feeder Assembly.

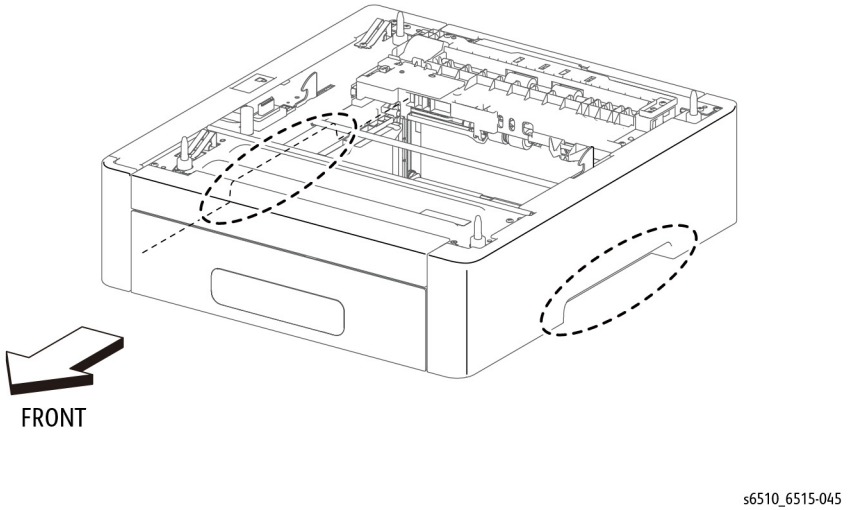

Figure 1 Locations to Hold the 550 Option Feeder

4. Refer to Figure 2 to release the hook and remove the Upper Feed Chute.

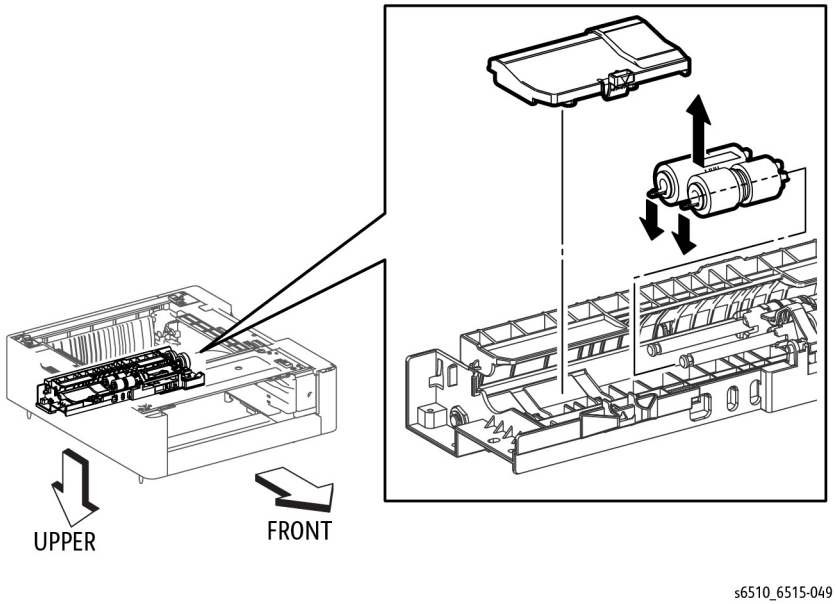

Figure 2 Remove the Feed Roller Assembly

5. Refer to Figure 2 to release the hook and remove the Feed Roller Assembly from the 550 Option Feeder Assembly.

REP 10.3.1 550 Option Cassette Assembly

Parts List on PL 10.3 Item 1

Removal

WARNING

Switch off the electricity to the machine. Disconnect the power cord from the customer supply while performing tasks that do not need electricity. Electricity can cause death or injury. Moving parts can cause injury.

1. Refer to Figure 1 to remove the 550 Option Cassette Assembly from the 550 Option Feeder Assembly.

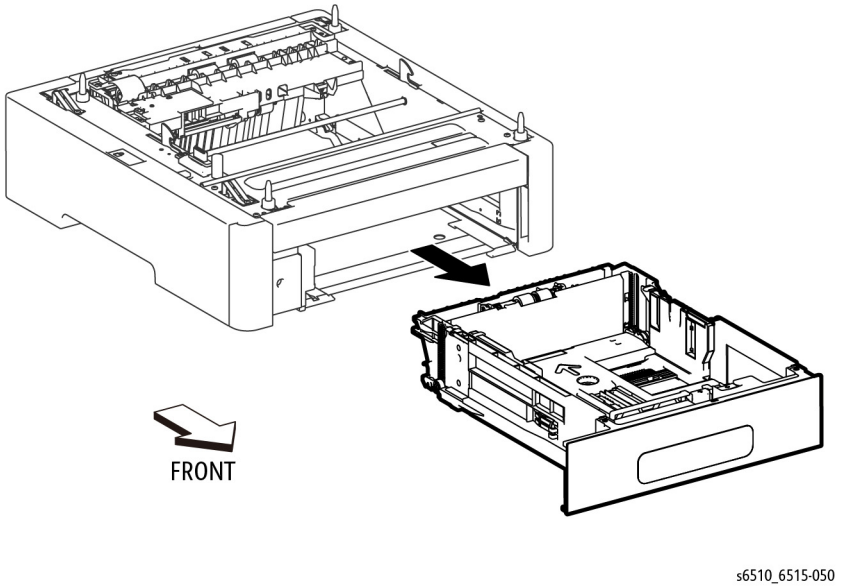

Figure 1 Remove the 550 Option Cassette Assembly

REP 10.3.2 Cassette Separator Holder Assembly (Option Feeder)

Parts List on PL 10.3 Item 2

Removal

WARNING

Switch off the electricity to the machine. Disconnect the power cord from the customer supply while performing tasks that do not need electricity. Electricity can cause death or injury. Moving parts can cause injury.

1. Remove the 550 Option Cassette Assembly, REP 10.3.1.
2. Refer to Figure 1 to release the hook on the holder.

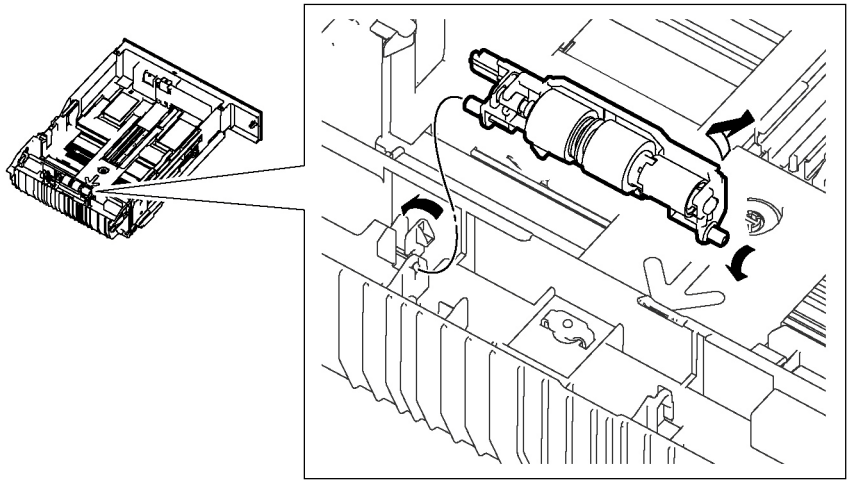

s6510_6515-111

Figure 1 Remove the Cassette Separator Holder Assembly

3. Refer to Figure 1 to remove the Cassette Separator Holder Assembly in the direction of the arrows.

REP 10.3.7 Legal Paper Tray Cover

Parts List on PL 10.3 Item 7

Removal

WARNING

Switch off the electricity to the machine. Disconnect the power cord from the customer supply while performing tasks that do not need electricity. Electricity can cause death or injury. Moving parts can cause injury.

1. Remove the 550 Option Cassette Assembly, REP 10.3.1.
2. Refer to Figure 1 to remove the Legal Paper Tray Cover.

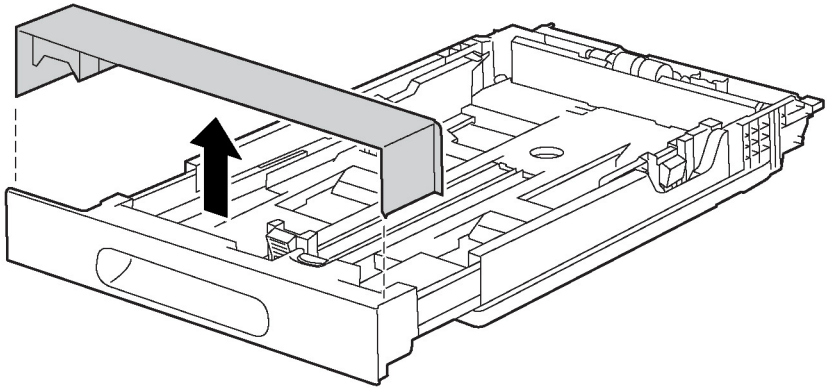

s6510_6515-123

Figure 1 Remove the Legal Paper Tray Cover

REP 10.3.98 Cassette Separator Roller Kit

Parts List on PL 10.3 Item 98

Removal

WARNING

Switch off the electricity to the machine. Disconnect the power cord from the customer supply while performing tasks that do not need electricity. Electricity can cause death or injury. Moving parts can cause injury.

1. Remove the 550 Cassette Assembly from the printer.
2. Refer to Figure 1 to release the hook at the end of the Cassette Separator Holder, then lift the holder in the direction of the arrow.

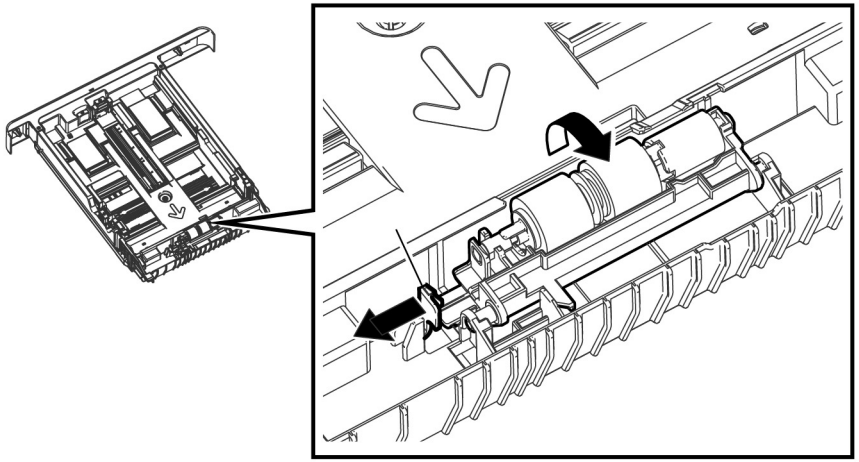

s6510_6515-042

Figure 1 Release the Cassette Separator Holder Hook

3. Refer to Figure 2 to remove the Cassette Separator Holder in the direction of the arrow.

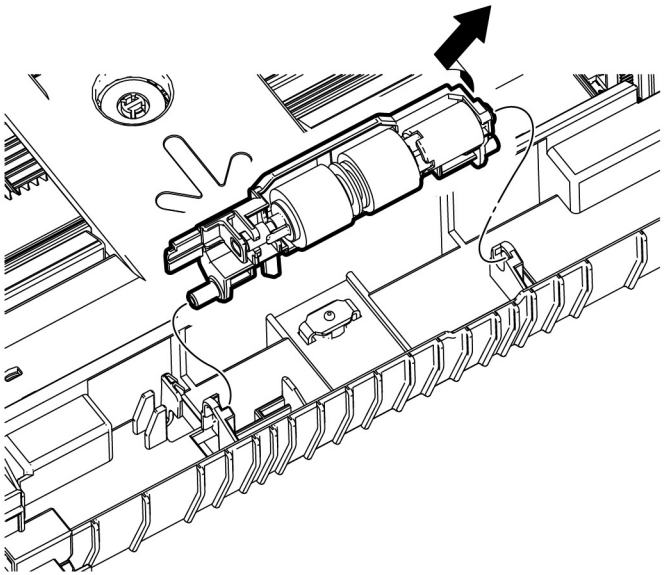

s6510_6515-043

Figure 2 Remove the Cassette Separator Roller Assembly

REP 13.1.1 Bypass Tray Frame Assembly

Parts List on PL 13.1 Item 1

Removal

WARNING

Switch off the electricity to the machine. Disconnect the power cord from the customer supply while performing tasks that do not need electricity. Electricity can cause death or injury. Moving parts can cause injury.

1. Remove the Front Inner Cover; REP 19.1.5 (MFP), REP 19.3.5 (SFP).
2. Remove the LVPS Board; REP 18.1.16 (MFP), REP 18.5.16 (SFP).
3. Remove the LVPS Plate; REP 18.1.20 (MFP), REP 18.5.20 (SFP).
4. Remove the Bypass Drive Assembly, REP 3.1.3.
5. Refer to Figure 1 to unplug the connectors (P/J482, P/J483).

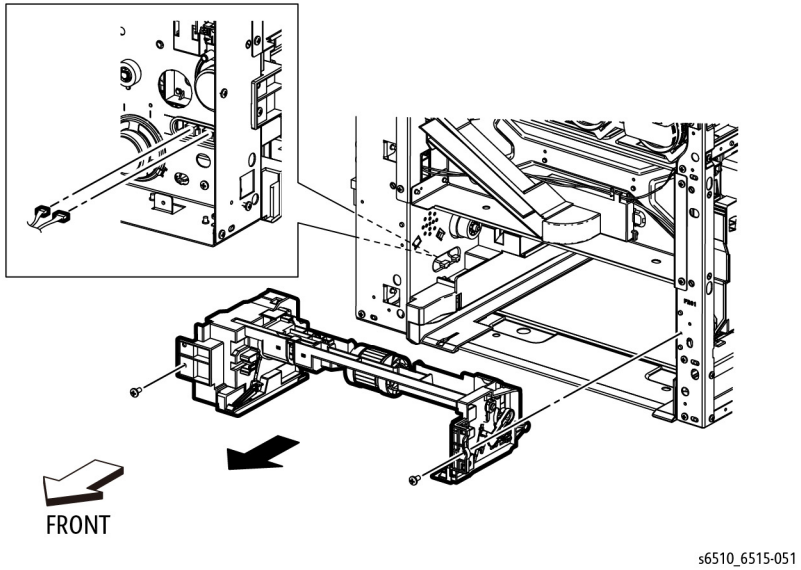

Figure 1

6. Refer to Figure 1 to remove two screws (silver, M3x6mm) attaching the Bypass Tray Frame Assembly and remove the frame.

REP 13.1.5 Bypass Tray Feed Roller

Parts List on PL 13.1 Item 5

Removal

WARNING

Switch off the electricity to the machine. Disconnect the power cord from the customer supply while performing tasks that do not need electricity. Electricity can cause death or injury. Moving parts can cause injury.

1. Remove the Main Bypass Tray Assembly, REP 13.2.1.
2. Refer to Figure 1 to release the hook on the Bypass Core Roll.

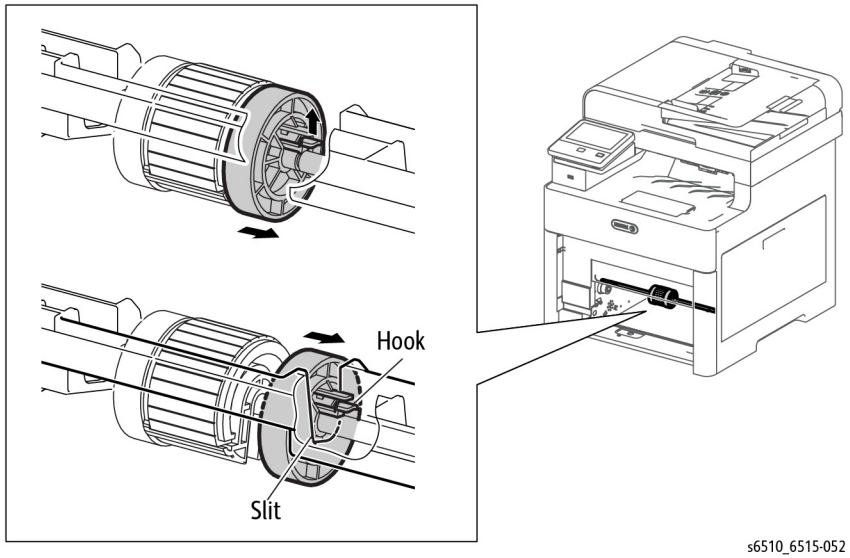

Figure 1 Release the Bypass Tray Feed Roller Hook

3. Refer to Figure 1 to rotate the Bypass Core Roll and move it in the direction of the arrow until the Core Roll slides completely against the Bypass Frame Housing.
4. Refer to Figure 2 to slide and rotate the Feed Roller in the direction of the arrows until it releases from the shaft.

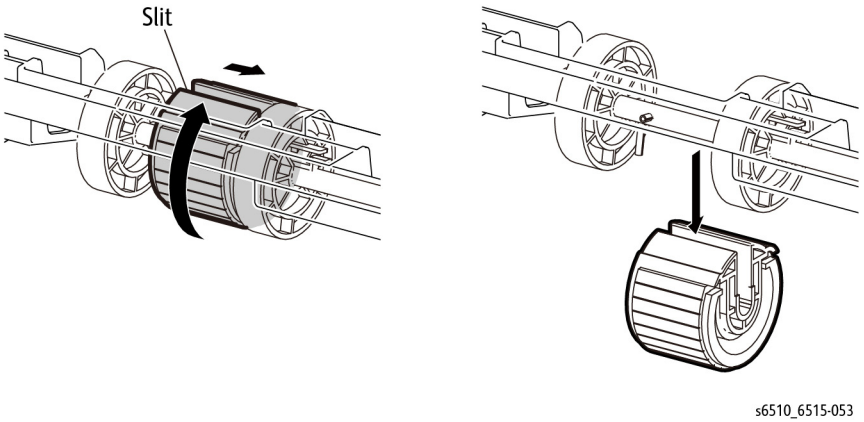

Figure 2 Remove the Bypass Tray Feed Roller

5. Remove the Bypass Tray Feed Roller.

REP 13.1.8 Bypass Tray No Paper Sensor

Parts List on PL 13.1 Item 8

Removal

WARNING

Switch off the electricity to the machine. Disconnect the power cord from the customer supply while performing tasks that do not need electricity. Electricity can cause death or injury. Moving parts can cause injury.

1. Remove the Bypass Tray Frame Assembly, REP 13.1.1.
2. Refer to Figure 1 to release the two hooks and the boss, and lift up the Bypass No Paper Bracket (with the No Paper Sensor) from the Bypass Tray Frame Assembly.

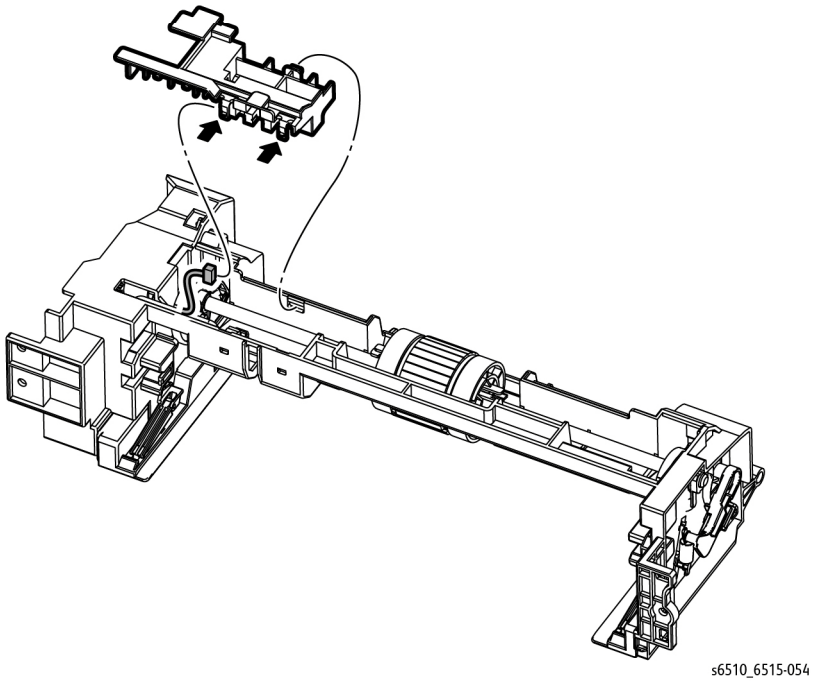

Figure 1 Remove the Bypass Tray No Paper Bracket

3. Unplug the connector (P/J484) and release the harness.
4. Refer to Figure 2 to release the three hooks attaching the No Paper Sensor to the Bracket, and remove the Sensor.

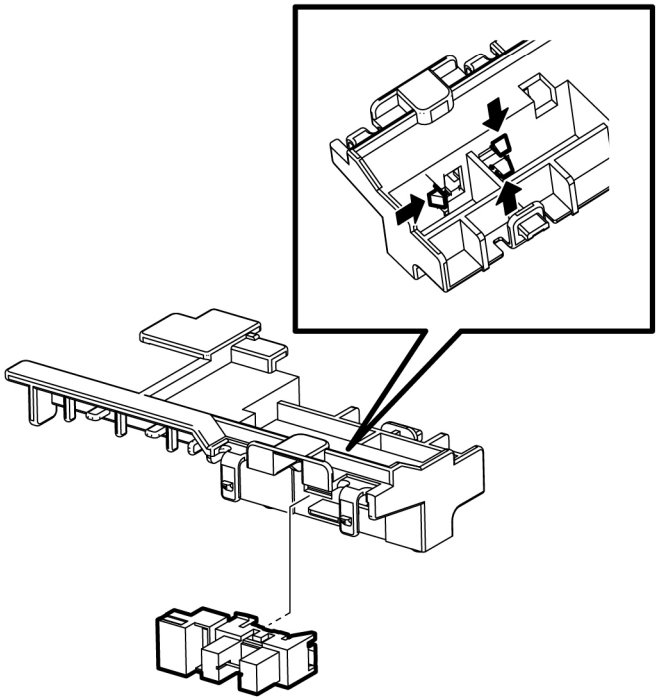

s6510_6515-055

Figure 2 Remove the Bypass Tray No Paper Sensor

REP 13.1.98 Bypass Tray TA1 Roller Assembly Kit

Parts List on PL 13.1 Item 98

Removal

WARNING

Switch off the electricity to the machine. Disconnect the power cord from the customer supply while performing tasks that do not need electricity. Electricity can cause death or injury. Moving parts can cause injury.

1. Remove the Bypass Tray Frame Assembly, REP 13.1.1.
2. Refer to Figure 1 to release the hook holding the Turn Gear, and remove the gear.

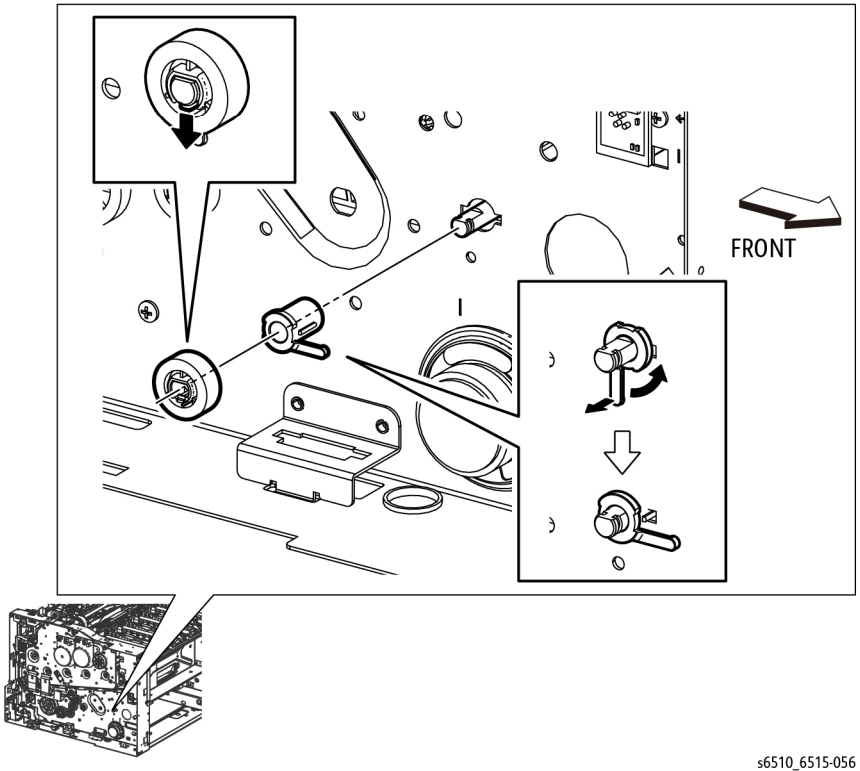

s6510_6515-056

Figure 1 Remove the Turn Gear and Left TA Bearing

CAUTION

In the following step, avoid breaking the bearing tab by lifting the tab gently during bearing removal.

3. Refer to Figure 1 to unlock the Left TA Bearing by lifting the tab, then rotate and remove it.
4. Refer to Figure 2 to slide the TA1 Roller Assembly in the direction of the arrow.

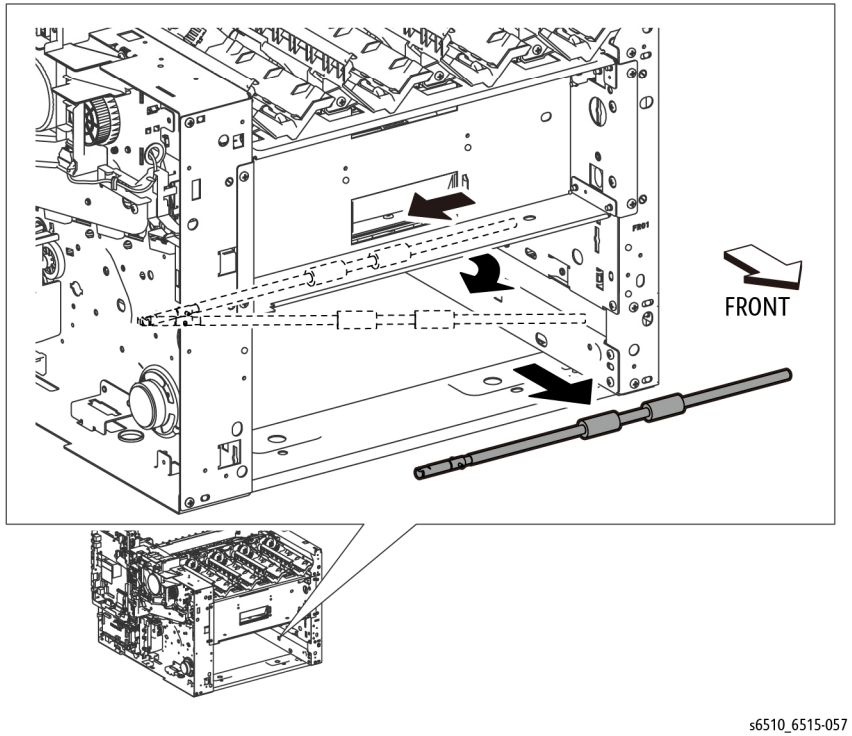

Figure 2 Remove the Bypass Tray TA1 Roller Assembly

5. Remove the TA1 Roller Assembly in the direction of the arrow.

Replacement

When replacing the roller, use only the parts in the spares kit that are required for this part.

REP 13.1.99 Bypass Tray TA2 Roller Assembly Kit

Parts List on PL 13.1 Item 99

Removal

WARNING

Switch off the electricity to the machine. Disconnect the power cord from the customer supply while performing tasks that do not need electricity. Electricity can cause death or injury. Moving parts can cause injury.

1. Remove the Right Side Cover; REP 19.1.97 (MFP), REP 19.3.97 (SFP).
2. Remove the Left Side Cover; REP 19.2.1 (MFP), REP 19.4.1 (SFP).
3. Remove the Front Inner Cover; REP 19.1.5 (MFP), REP 19.3.5 (SFP).
4. Remove the Transfer Belt Unit, REP 6.1.1.
5. Remove the Drum Cartridge (Y,M,C,K) and Guide Cover Assembly, REP 8.1.1.
6. Remove the LPH Color Head Assembly, REP 2.1.1.
7. Remove the PH Drive Assembly, REP 3.1.2.
8. Remove the MSI Drive Assembly, REP 3.1.3.
9. Remove the LPH Xerographic CRUM FFC Kit, REP 2.1.99.
10. Remove the HVPS Guide Assembly; REP 18.2.1 (MFP), REP 18.6.1 (SFP).
11. Refer to Figure 1 to release the three harnesses from the Harness Guide and remove the Holder Assembly.

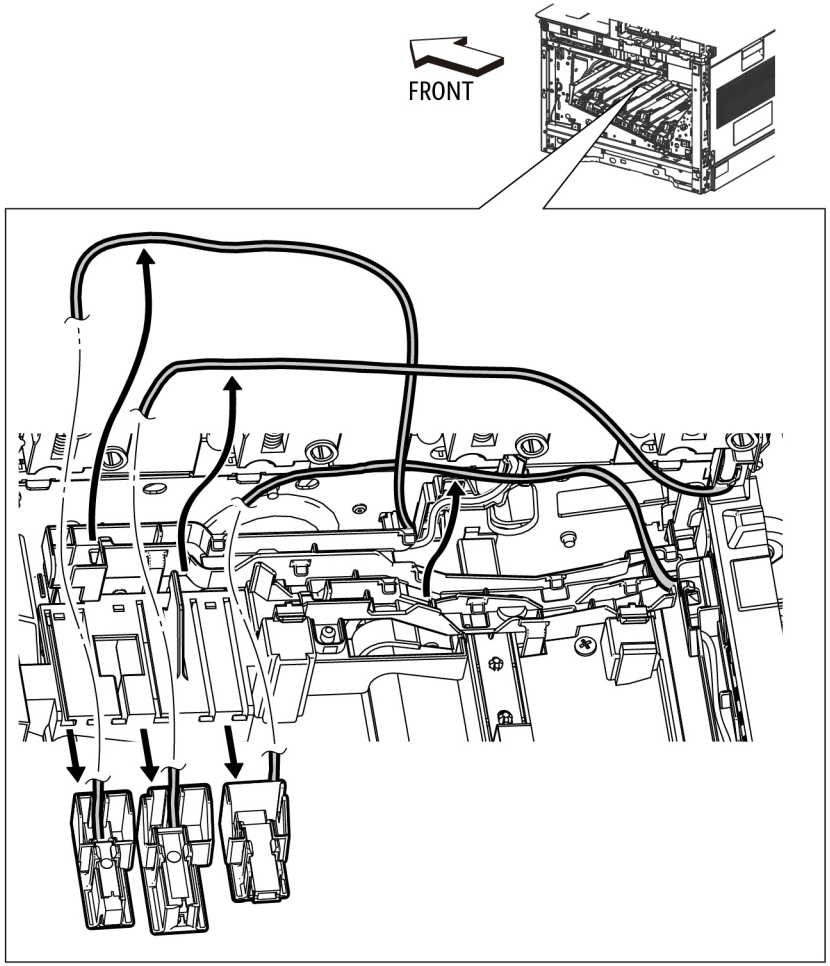

s6510_6515-058

Figure 1 Release the Harnesses

12. Refer to Figure 2 to release the two hooks and the three bosses, then remove the Harness Guide.

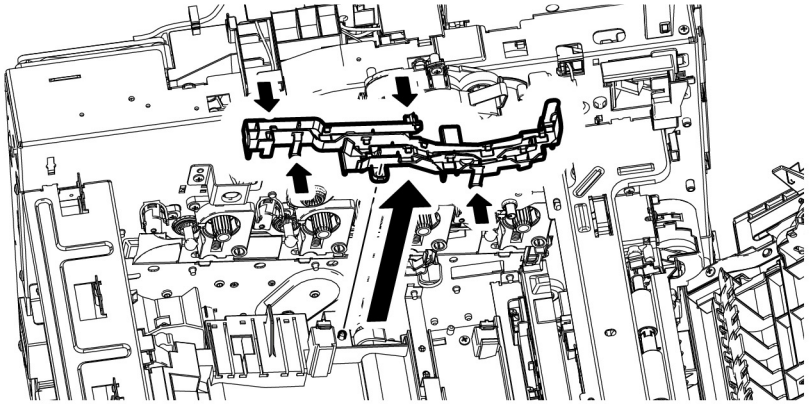

s6510_6515-059

Figure 2 Remove the Harness Guide

13. Refer to Figure 3 to remove the one screw (silver, M3x6mm) attaching the Plate and remove the Plate.

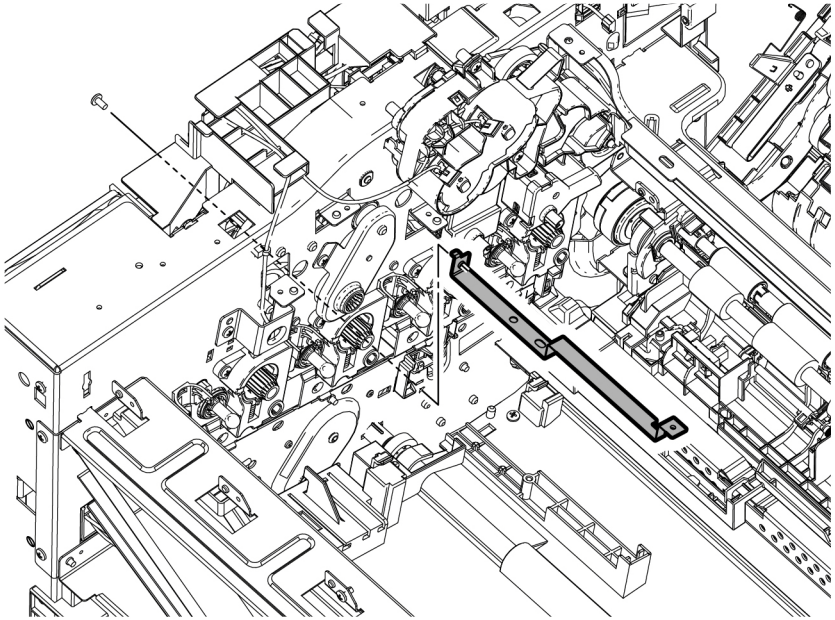

s6510_6515-060

Figure 3 Remove the Plate

14. Refer to Figure 4 to remove the two screws (silver, tapping, M3x8mm) attaching the MSI Upper Chute (PL13.1.15) and lift up the MSI Upper Chute.

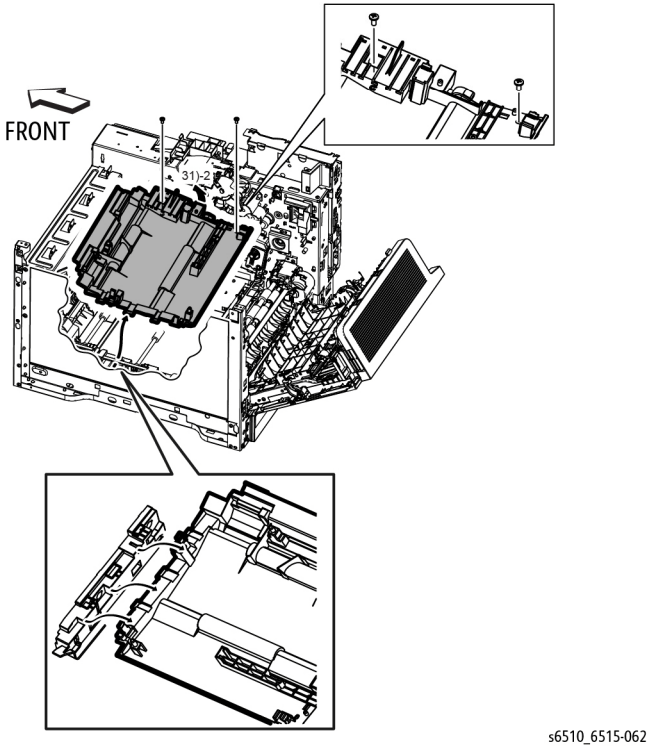

Figure 4 Detach the MSI Upper Chute

15. Refer to Figure 5 to release the hook and remove the Turn Gear.

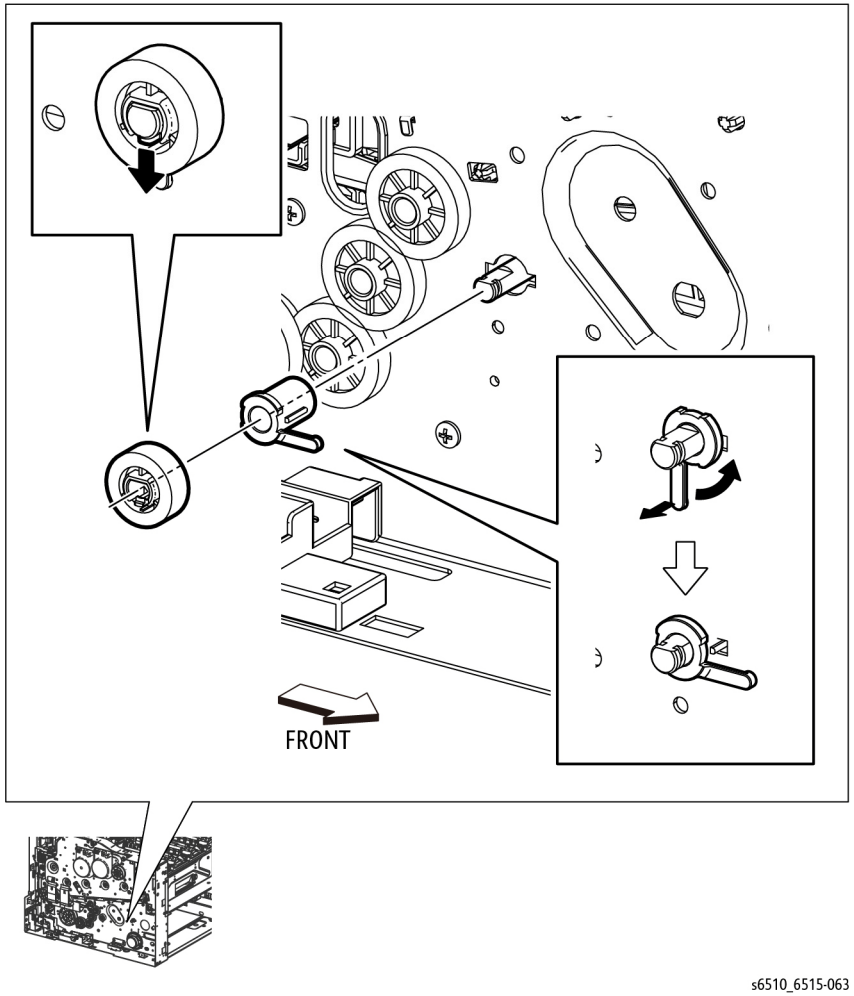

Figure 5 Remove the Turn Gear and Left TA Bearing

CAUTION

In the following step, avoid breaking the bearing tab by lifting the tab gently during bearing removal.

16. Refer to Figure 5 to unlock the Left TA Bearing by lifting the tab, then rotate and remove it.
17. Refer to Figure 6 to slide the Bypass Tray TA2 Roller Assembly, then remove the TA2 Roller in the direction of the arrows.

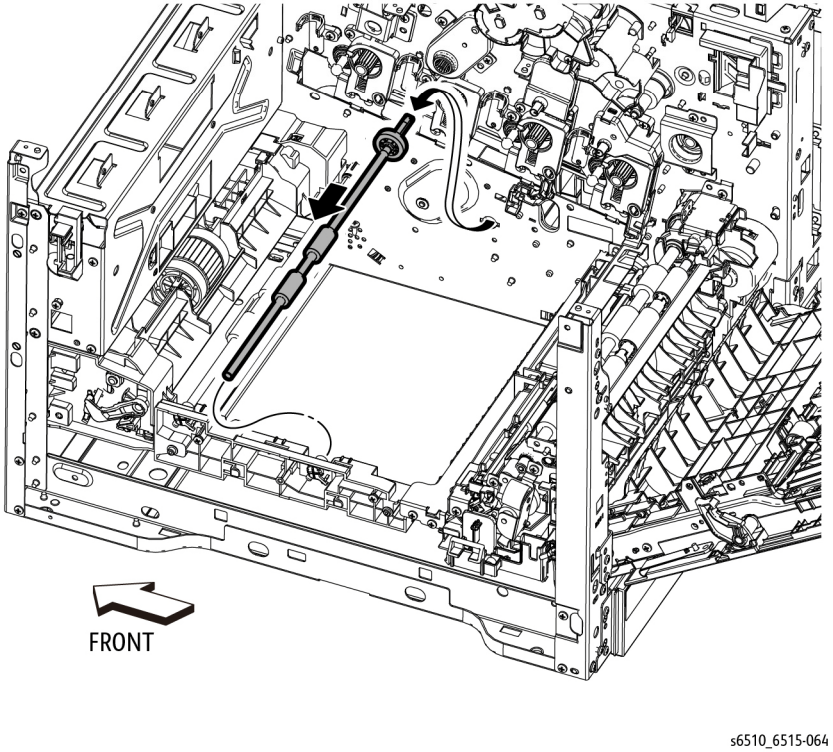

Figure 6 Remove the Bypass Tray TA2 Roller Assembly

Replacement

When replacing the roller, use only the parts in the spares kit that are required for this part.

CAUTION

Avoid damaging wires during replacement. When replacing wire harnesses, use factory-installed routes.

For harness routing details when replacing the HVPS Guide Assembly, see the Replacement section in REP 18.2.1 (MFP), REP 18.6.1 (SFP).

REP 13.2.1 Main Bypass Tray Assembly

Parts List on PL 13.2 Item 1

Removal

WARNING

Switch off the electricity to the machine. Disconnect the power cord from the customer supply while performing tasks that do not need electricity. Electricity can cause death or injury. Moving parts can cause injury.

1. Refer to Figure 1 to open the Main Bypass Tray.

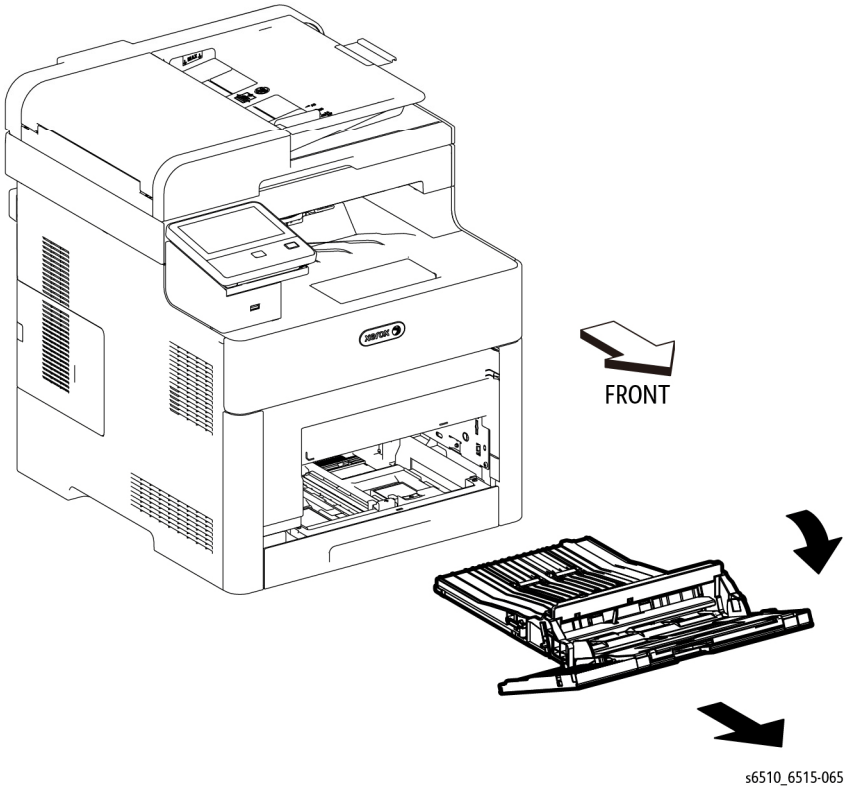

Figure 1 Remove the Main Bypass Tray Assembly

2. Remove the Bypass Tray Assembly by pulling it out in the direction of the arrow.

REP 13.2.5 Bypass Tray Separator Holder Assembly

Parts List on PL 13.2 Item 5

Removal

WARNING

Switch off the electricity to the machine. Disconnect the power cord from the customer supply while performing tasks that do not need electricity. Electricity can cause death or injury. Moving parts can cause injury.

1. Remove the Main Bypass Tray Assembly, REP 13.2.1.
2. Refer to Figure 1 to release the hook of the Bypass Tray Separator Holder Assembly and remove the Bypass Tray Separator Holder from the Main Bypass Tray.

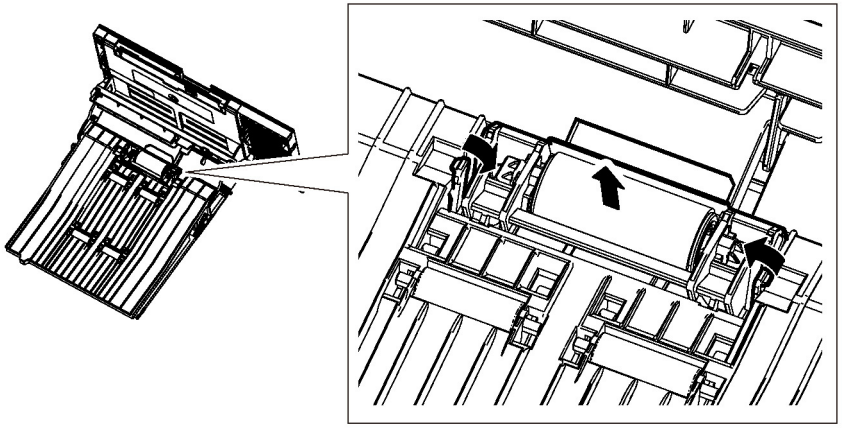

s6510_6515-066

Figure 1 Remove the Bypass Tray Separator Holder Assembly

REP 15.1.1 Option Registration Chute

Parts List on PL 15.1 Item 1

Removal

WARNING

Switch off the electricity to the machine. Disconnect the power cord from the customer supply while performing tasks that do not need electricity. Electricity can cause death or injury. Moving parts can cause injury.

1. Remove the Right Side Cover; REP 19.1.97 (MFP), REP 19.3.97 (SFP)
2. Remove the Rear Cover; REP 19.2.99 (MFP), REP 19.4.99 (SFP).
3. Refer to Figure 1 to remove the Lower Duplex Chute.

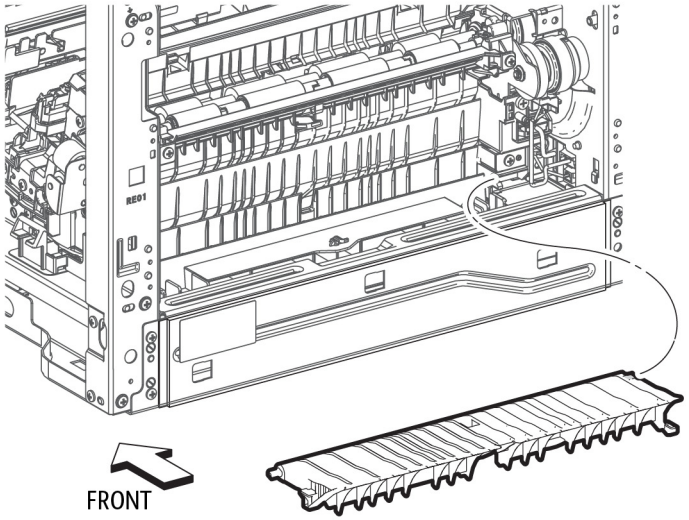

s6510_6515-067

Figure 1 Remove the Lower Duplex Chute

4. Refer to Figure 2 to release two hooks and remove the Option Registration Chute.

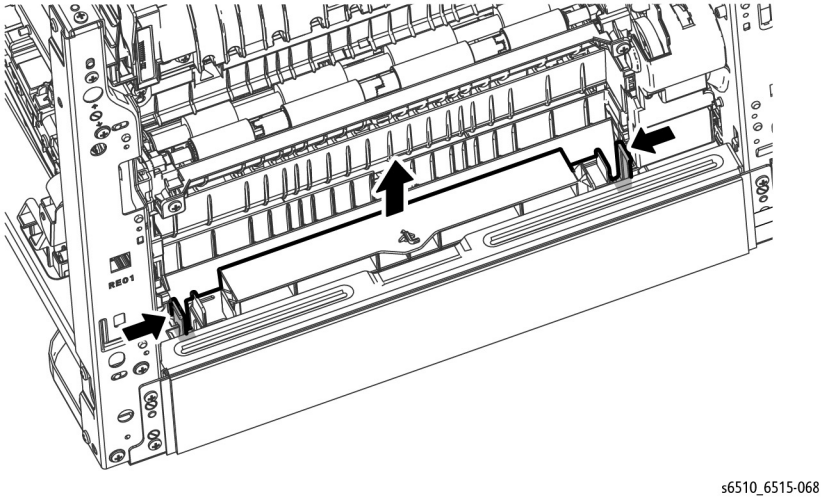

Figure 2 Remove the Option Registration Chute

REP 15.1.99 Duplex Registration Roller Assembly Kit

Parts List on PL 15.1 Item 99

Removal

WARNING

Switch off the electricity to the machine. Disconnect the power cord from the customer supply while performing tasks that do not need electricity. Electricity can cause death or injury. Moving parts can cause injury.

1. Remove the Registration Chute Feeder Assembly, REP 15.2.1.
2. Refer to Figure 1 to unplug the connector (P/J541).

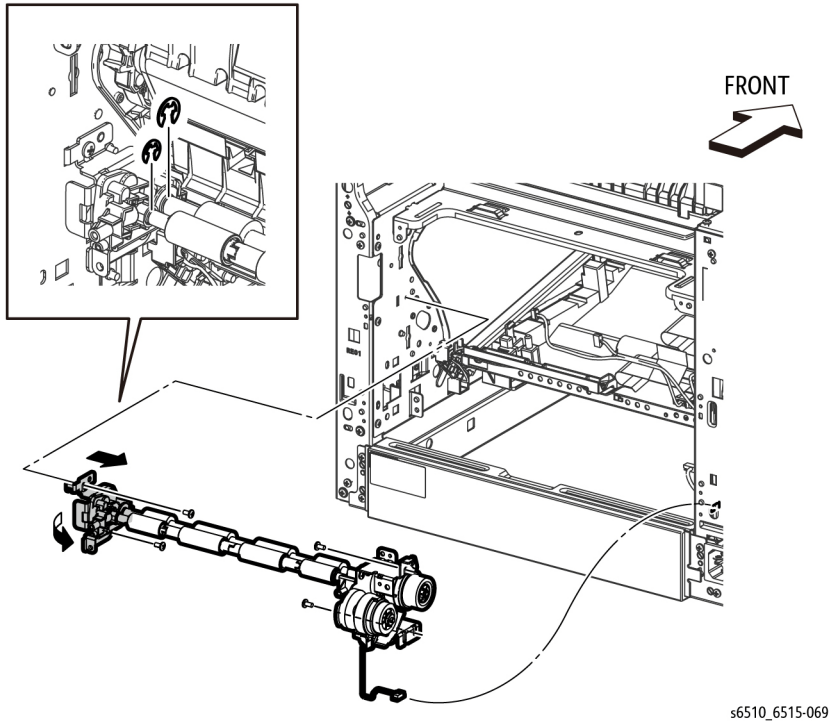

Figure 1 Remove the Duplex Registration Roller Assembly

NOTE: *When removing the Duplex Roller Registration Assembly, bearings and gears will move out of their seated positions. For easier replacement later, carefully observe the placement and orientation of bearings and gears at both ends of the roller assembly before removing it.*

3. Refer to Figure 1 to remove the two E-rings of the Duplex Registration Roller Assembly.
4. Refer to Figure 1 to remove the four screws (silver, M3x6mm).
5. Refer to Figure 1 to slide the Duplex Registration Roller Assembly in the direction of the arrow, and remove the roller assembly.

Replacement

NOTE: *Be sure to align bearings and gears at each end of the Duplex Registration Roller Assembly so they are fully seated in their positions.*

For easier replacement, use the following order:

1. Align rollers, bearings, and gears into their final positions.
2. Snap the two E-rings into their positions.
3. Install the four screws (silver, M3x6mm).
4. Reattach the connector (P/J541).

REP 15.2.1 Registration Chute Feeder Assembly

Parts List on PL 15.2 Item 1

Removal

WARNING

Switch off the electricity to the machine. Disconnect the power cord from the customer supply while performing tasks that do not need electricity. Electricity can cause death or injury. Moving parts can cause injury.

1. Remove the Right Side Cover; REP 19.1.97 (MFP), REP 19.3.97 (SFP)
2. Remove the Rear Cover; REP 19.2.99 (MFP), REP 19.4.99 (SFP).
3. Refer to Figure 1 to remove the one screw (silver, M3x6mm) attaching the Rear Duplex Cover and remove the cover.

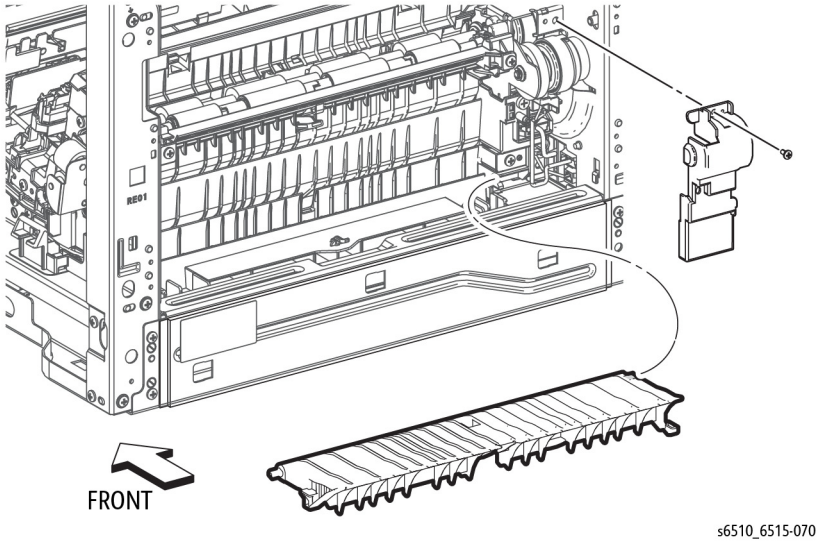

Figure 1 Remove the Rear Duplex Cover and Lower Duplex Chute

4. Refer to Figure 1 to rotate the Lower Duplex Chute 90 degrees toward the rear, and remove the Lower Duplex Chute.
5. Remove the 250 Option Registration Chute, REP 15.1.1.
6. Refer to Figure 2 to remove the two screws (silver, tapping, M3x8mm) attaching the Upper Duplex Chute and remove the chute.

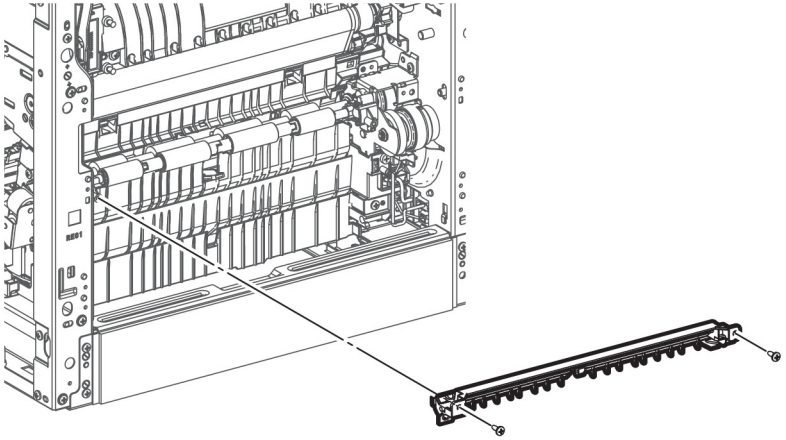

s6510_6515-071

Figure 2 Remove the Upper Duplex Chute

7. Remove the Second Bias Transfer Housing Kit; REP 18.2.99 (MFP), REP 18.6.99 (SFP).
8. Refer to Figure 3 to remove the screw (silver, tapping, M3x8mm) attaching the Feeder Chute and pull out the chute in the direction of the arrow.

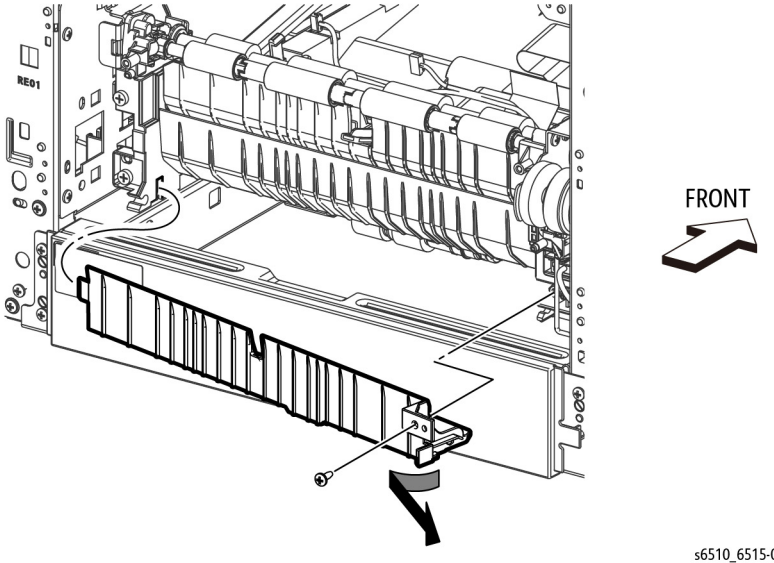

s6510_6515-072

Figure 3 Remove the Feeder Chute

9. Refer to Figure 4 to unplug the two connectors (P/J544, P/J545).

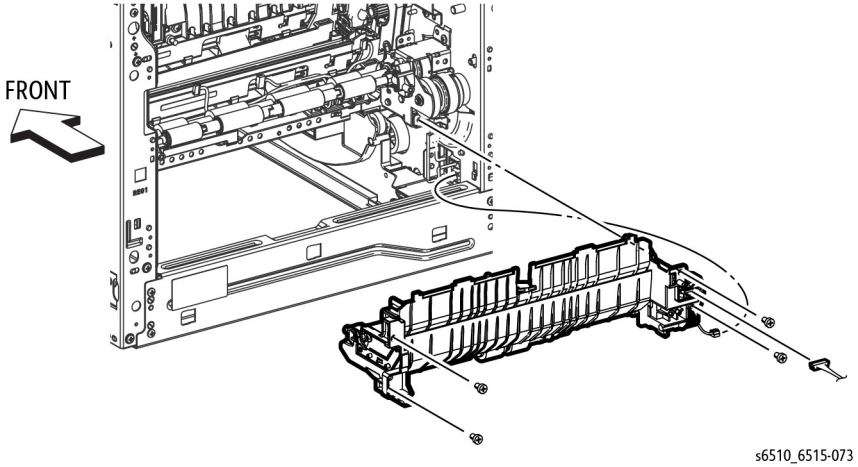

s6510_6515-073

Figure 4 Remove the Registration Chute Feeder

10. Refer to Figure 4 to remove the four screws (silver, M4x6mm) attaching the Registration Chute Feeder Assembly and remove the feeder.

Replacement

When installing the Registration Chute Feeder, install it at the angle shown in Figure 5.

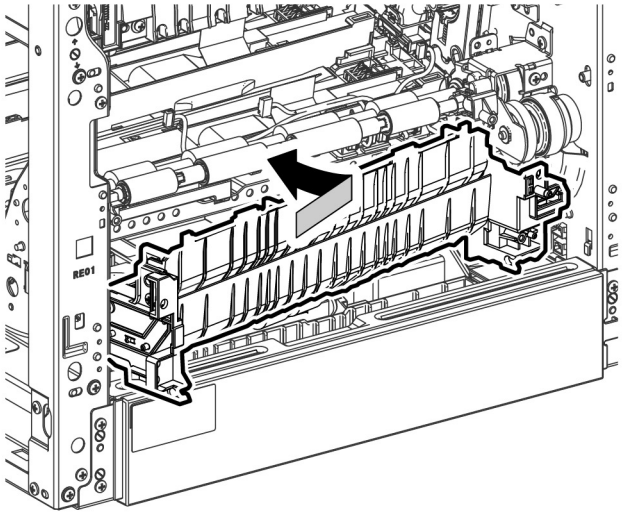

s6510_6515-074

Figure 5 Observe Angle When Installing Feeder

REP 15.2.2 No Paper Actuator (Registration)

Parts List on PL 15.2 Item 2

Removal

WARNING

Switch off the electricity to the machine. Disconnect the power cord from the customer supply while performing tasks that do not need electricity. Electricity can cause death or injury. Moving parts can cause injury.

1. Remove the 250 Cassette Assembly.
2. Remove the Main Bypass Tray Assembly.
3. Refer to Figure 1 to release tab A of the No Paper Actuator in the direction of the arrow and fully rotate the actuator.

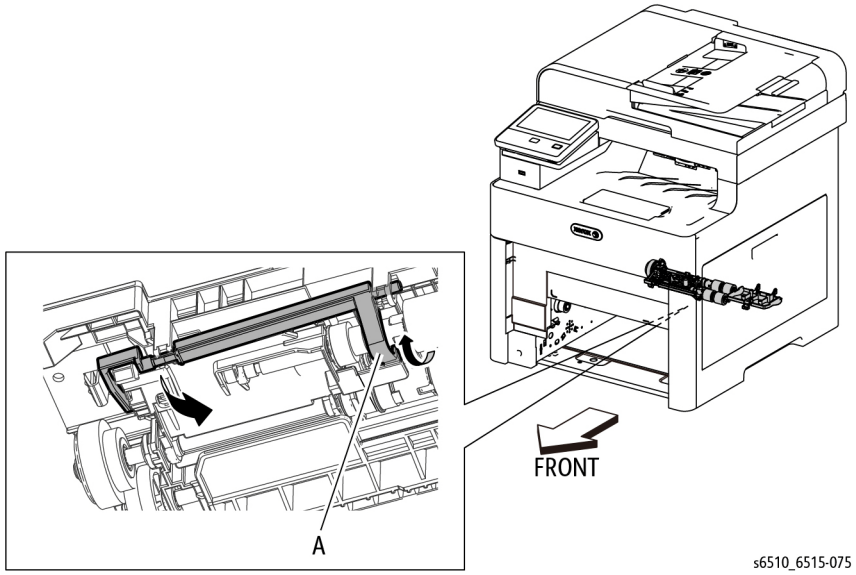

s6510_6515-075

Figure 1 Remove the No Paper Actuator

4. While fully rotated out of its home position, remove the No Paper Actuator by pulling the actuator out of the retaining post.

Replacement

When replacing the No Paper Actuator, rotate the actuator tab (labeled A in Figure 1) so it snaps into its home position as shown in the figure.

REP 15.2.11 Registration Actuator

Parts List on PL 15.2 Item 11

Removal

WARNING

Switch off the electricity to the machine. Disconnect the power cord from the customer supply while performing tasks that do not need electricity. Electricity can cause death or injury. Moving parts can cause injury.

1. Remove the Registration Chute Feeder Assembly, REP 15.2.1.

CAUTION

In the following step, avoid losing the spring from the end of the Registration Actuator when removing the actuator.

2. Referring to Figure 1, use a flat-blade tool to release the left end of the Registration Actuator, then release the right end and remove the Registration Actuator from the Registration Chute Feeder Assembly.

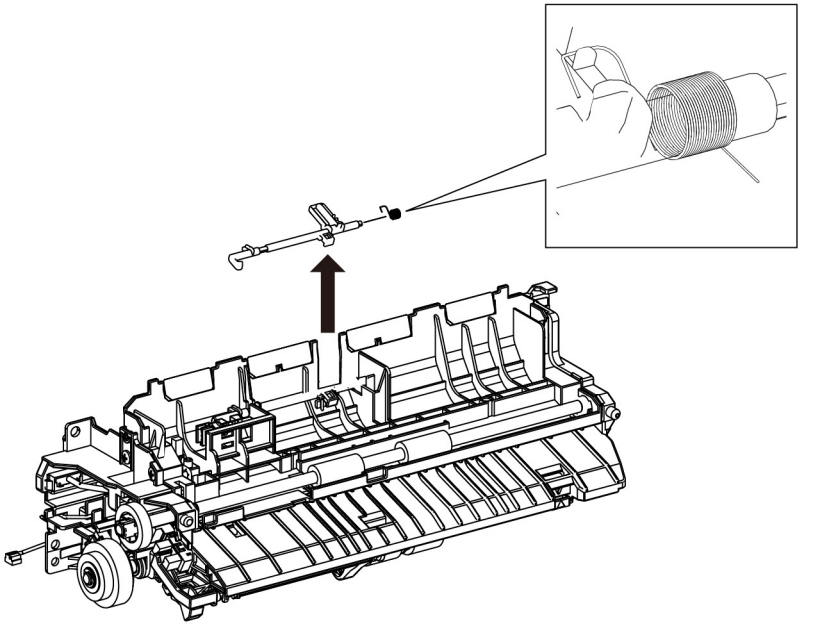

s6510_6515-076

Figure 1 Remove the Registration Actuator

Replacement

When replacing the Registration Actuator, install the spring as shown in the detail in Figure 1.

REP 15.2.13 Registration Photo Sensor

Parts List on PL 15.2 Item 13

Removal

WARNING

Switch off the electricity to the machine. Disconnect the power cord from the customer supply while performing tasks that do not need electricity. Electricity can cause death or injury. Moving parts can cause injury.

1. Remove the Registration Chute Feeder Assembly, REP 15.2.1.
2. Refer to Figure 1 to release the double hooks, then remove the Registration Photo Sensor from the Registration Chute Feeder Assembly.

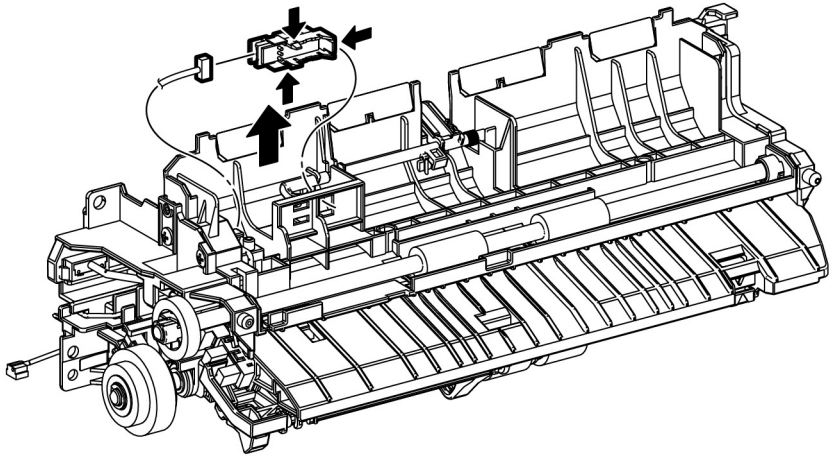

s6510_6515-077

Figure 1 Remove the Registration Photo Sensor

3. Refer to Figure 1 to unplug the Photo Sensor Harness connector (P/J272) from the Registration Photo Sensor.

REP 15.2.17 Upper Feed Chute

Parts List on PL 15.2 Item 17

Removal

WARNING

Switch off the electricity to the machine. Disconnect the power cord from the customer supply while performing tasks that do not need electricity. Electricity can cause death or injury. Moving parts can cause injury.

1. Remove the 250 Cassette Assembly.
2. Remove the Main Bypass Tray Assembly.
3. Refer to Figure 1 to remove the Upper Feed Chute.

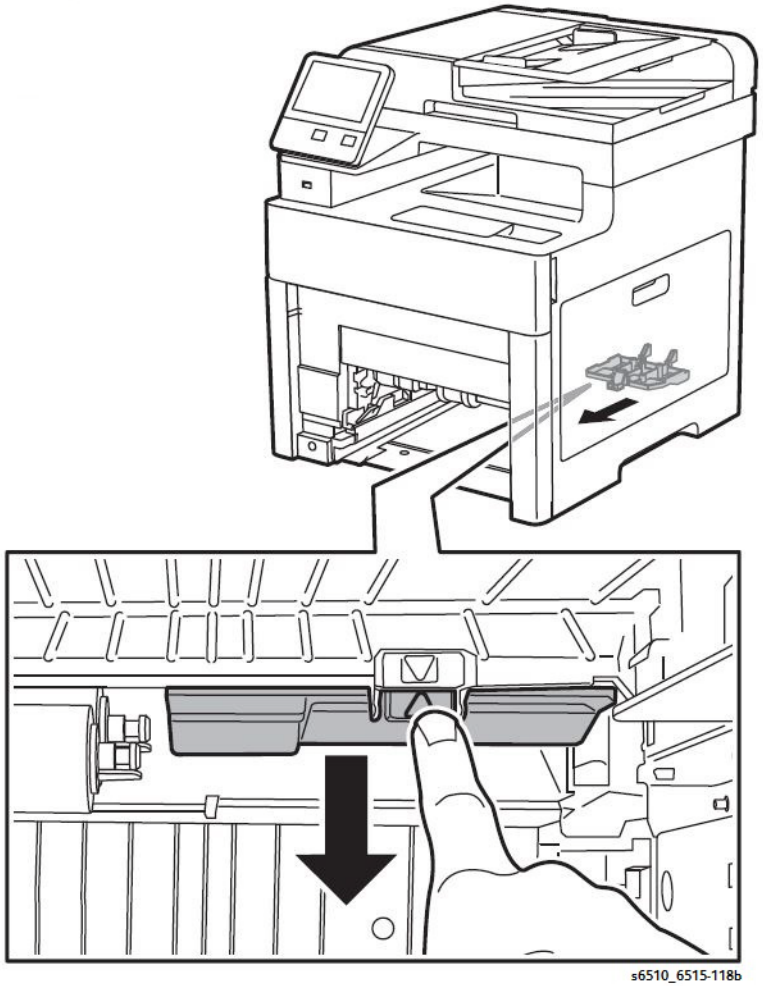

Figure 1 Remove the Upper Feed Chute

REP 17.1.1 Exit Chute Assembly

Parts List on PL 17.1 Item 1

Removal

WARNING

Switch off the electricity to the machine. Disconnect the power cord from the customer supply while performing tasks that do not need electricity. Electricity can cause death or injury. Moving parts can cause injury.

WARNING

The Fuser is very hot. Take added care when handling the Fuser to avoid being burned.

1. Remove the Top Cover Assembly; REP 19.1.99 (MFP), REP 19.3.99 (SFP).
2. Remove the Main Exit Drive Assembly, REP 17.1.4.
3. Refer to Figure 1 to remove the two screws (silver, M3x6mm) and remove the Exit Chute Assembly.

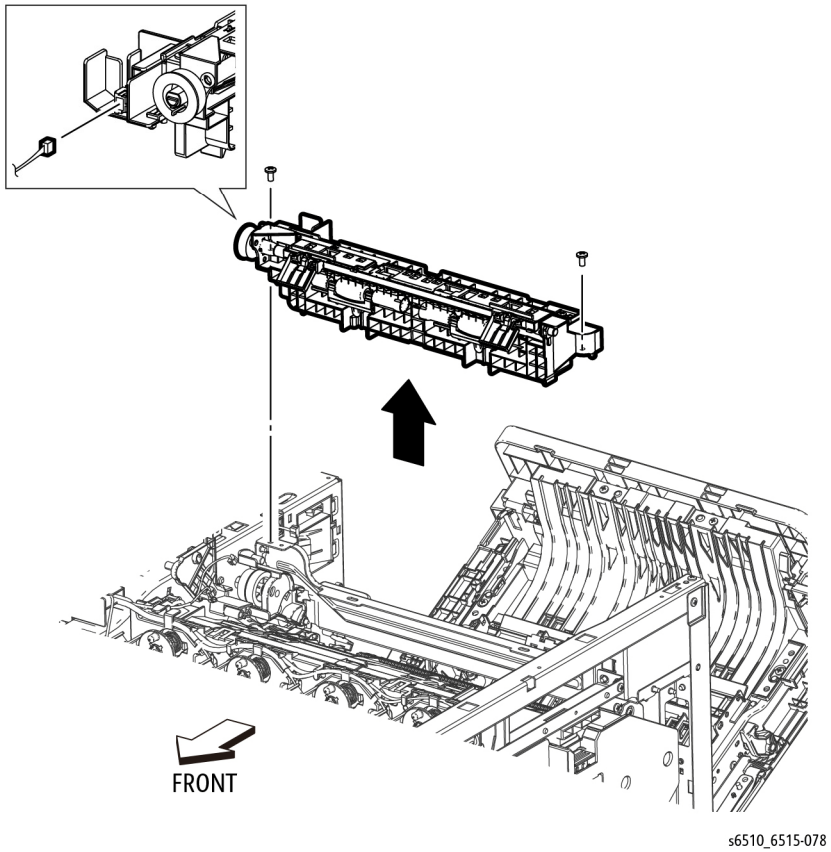

Figure 1 Remove the Exit Chute Assembly

4. Refer to Figure 1 to unplug the connector (P/J272) from the Exit Chute Assembly.

REP 17.1.4 Main Exit Drive Assembly

Parts List on PL 17.1 Item 4

Removal

WARNING

Switch off the electricity to the machine. Disconnect the power cord from the customer supply while performing tasks that do not need electricity. Electricity can cause death or injury. Moving parts can cause injury.

WARNING

The Fuser is very hot. Take added care when handling the Fuser to avoid being burned.

1. Remove the Top Cover Assembly; REP 19.1.99 (MFP), REP 19.3.99 (SFP).
2. Open the Rear Cover.
3. Refer to Figure 1 to unplug the connectors (P/J461, P/J462) and release the harness.

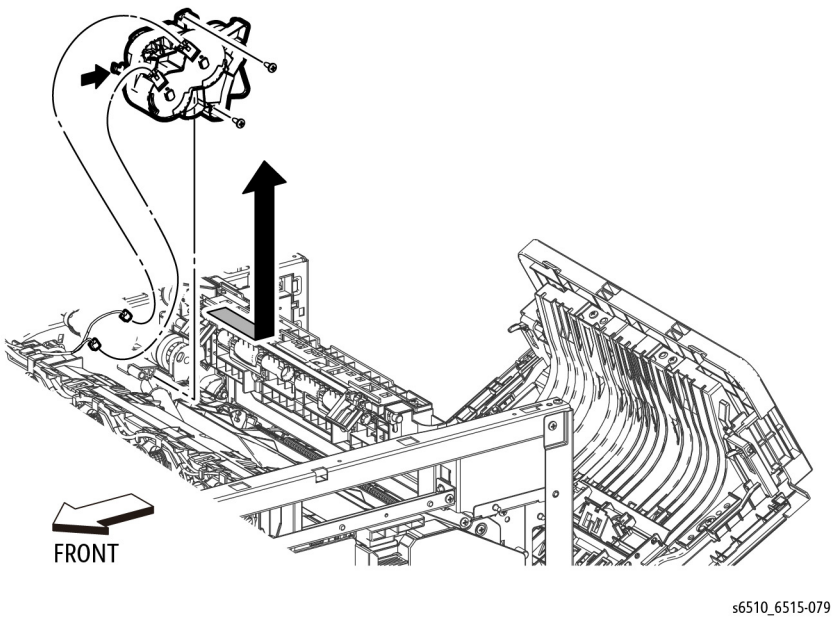

Figure 1

4. Refer to Figure 1 to remove the two screws (silver, tapping, M3x8mm) attaching the Main Exit Drive Assembly, and remove the drive assembly.

Replacement

When re-connecting the connectors (P/J461, P/J462) onto the Exit Drive, refer to Figure 1 to ensure each harness is connected to the correct terminal.

REP 17.1.5 Exit Idle Gear Assembly

Parts List on PL 17.1 Item 5

Removal

WARNING

Switch off the electricity to the machine. Disconnect the power cord from the customer supply while performing tasks that do not need electricity. Electricity can cause death or injury. Moving parts can cause injury.

WARNING

The Fuser is very hot. Take added care when handling the Fuser to avoid being burned.

1. Remove the Top Cover Assembly; REP 19.1.99 (MFP), REP 19.3.99 (SFP).
2. Open the Rear Cover.
3. Remove the Exit Chute Assembly, REP 17.1.1.
4. Remove the Main Drive, REP 3.1.1.
5. Refer to Figure 1 to remove the one screw (silver, tapping, M3x8mm) from the left side of the printer frame attaching the Exit Idle Gear Assembly, and remove the gear assembly.

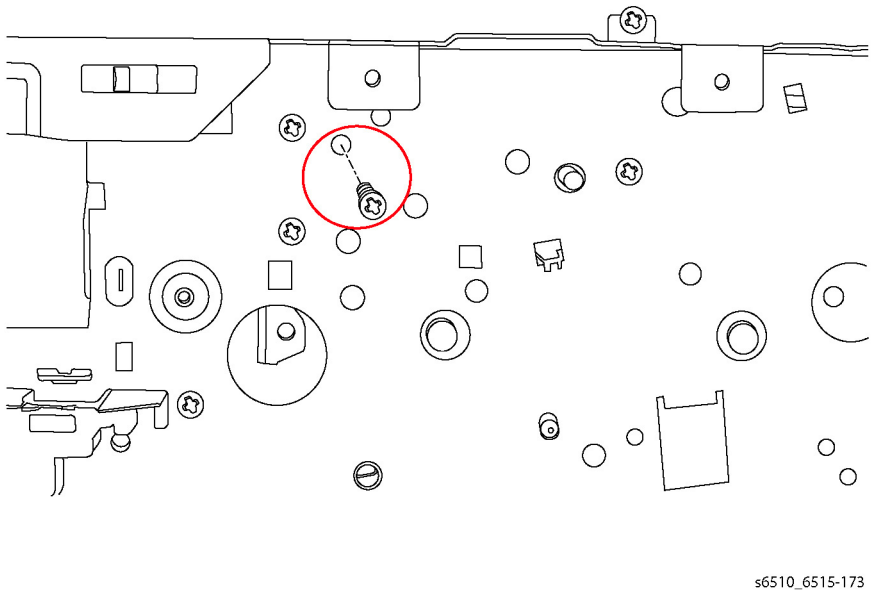

Figure 1 Remove the Right Side Cover Assembly

REP 18.1.1 MCU Board (MFP)

Parts List on PL 18.1 Item 1

Removal

WARNING

Switch off the electricity to the machine. Disconnect the power cord from the customer supply while performing tasks that do not need electricity. Electricity can cause death or injury. Moving parts can cause injury.

CAUTION

1. **Before starting removal, print a configuration page and verify the FW version.**
2. **Replace the MCU Board.**
3. **Print config page again.**
4. **Verify the FW and reload FW if not the current version.**

CAUTION

Never replace the MCU Board and ESS Board at the same time.

NOTE: *Observe the following when removing or replacing the MCU Board:*

- *Do not replace the MCU Board and ESS Board at the same time. The data is saved on the EMMC Board on the ESS Board. Replace the MCU Board first, and then replace the ESS Board. At the time of each replacement, turn on the printer to restore the data into the MCU Board or ESS Board.*

  Replace MCU Board > Cycle pwr ON/OFF > Replace ESS Board > Cycle pwr ON/OFF
- *It is not necessary to back-up or restore data saved on the ESS Board by Diagnostic, etc. The data is automatically backed-up when the printer is turned off or in the Deep Sleep mode. When the printer is turned on, mismatched information is detected on the MCU Board, and then the information is corrected to be matched and restored into the MCU Board*

1. Remove the Left Side Cover, REP 19.2.1.

CAUTION

In the following step, avoid breaking the FFC lock lever when releasing the FFC. Open the lever just far enough to release the FFC.

NOTE: *In the following step, when releasing the lock lever on the FFC connector, slightly open the lock lever to 15 degrees until the lock lever contacts the FFC connector as shown in Figure 1. After releasing the lock lever, hold the lever while gently pulling the FFC from the connector.*

2. Refer to Figure 1 to unplug the 12 connectors from the MCU Board (P/J100, P/J110, P/J120, P/J140, P/J270, P/J280, P/J400, P/J460, P/J480, P/J540, P/J570, P/J800) and the FFC (P/J300).

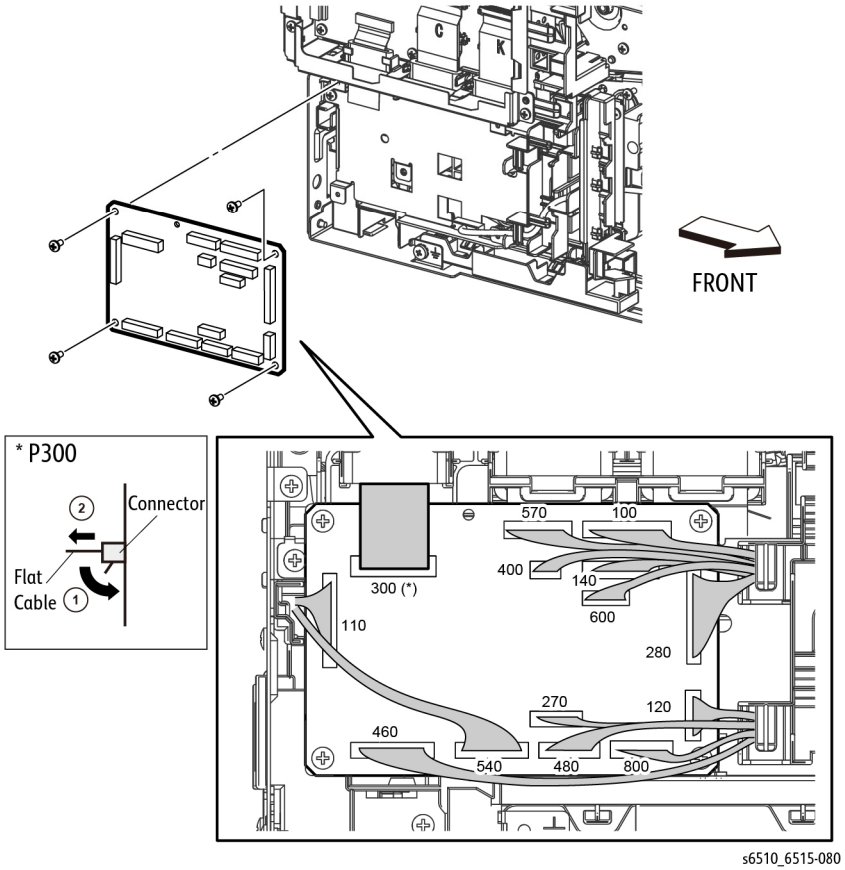

Figure 1 Remove the MCU Board (MFP)

3. Refer to Figure 1 to remove the four screws (silver, M3x6mm) attaching the MCU Board and remove the board.

Replacement

REP 18.1.2 ESS MCU FFC (MFP)

Parts List on PL 18.1 Item 2

Removal

WARNING

Switch off the electricity to the machine. Disconnect the power cord from the customer supply while performing tasks that do not need electricity. Electricity can cause death or injury. Moving parts can cause injury.

1. Remove the Left Side Cover, REP 19.2.1.
2. Refer to Figure 1 to remove the two screws (silver, M3x6mm) attaching the ESS Lower Plate and remove the plate.

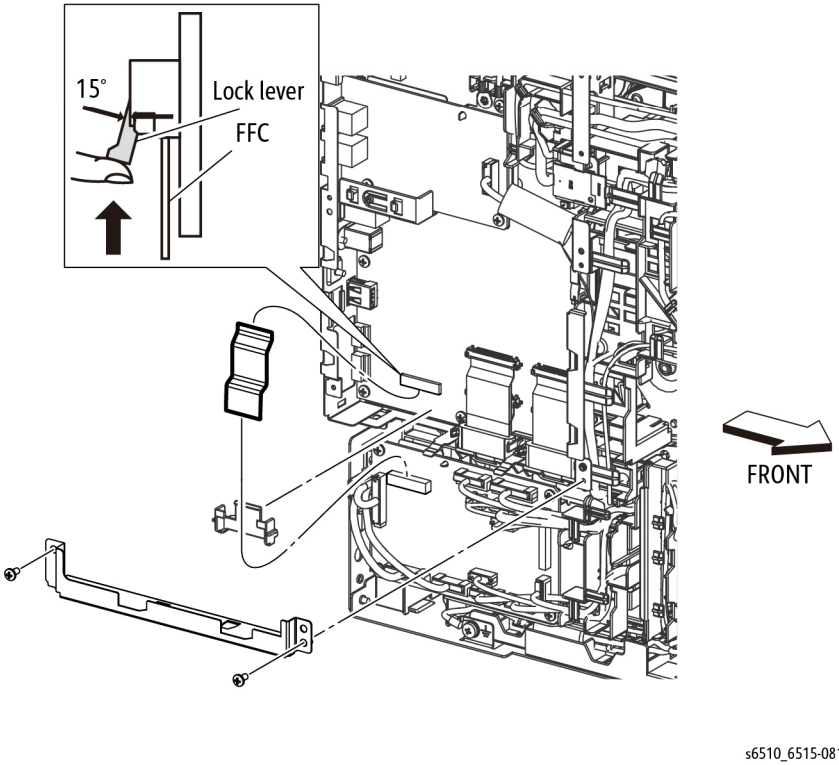

Figure 1 Remove the ESS MCU FFC (MFP)

CAUTION

In the following step, avoid breaking the FFC lock lever when releasing the FFC. Open the lever just far enough to release the FFC.

NOTE: *In the following step, when releasing the lock lever on the FFC connector, slightly open the lock lever to 15 degrees until the lock lever contacts the FFC connector as shown in Figure 1. After releasing the lock lever, hold the lever while gently pulling the FFC from the connector.*

3. Unplug the connectors (P/J300, P/J335) and remove the ESS MCU FFC.
4. Remove the MCU Color Guide FFC.

REP 18.1.5 ESS Board (MFP)

Parts List on PL 18.1 Item 5

Removal

WARNING

Switch off the electricity to the machine. Disconnect the power cord from the customer supply while performing tasks that do not need electricity. Electricity can cause death or injury. Moving parts can cause injury.

CAUTION

1. **Before starting removal, print a configuration page and verify the FW version.**
2. **Replace the ESS Board.**
3. **Print config page again.**
4. **Verify the FW and reload FW if not the current version.**

CAUTION

Never replace the MCU Board and ESS Board at the same time.

NOTE: *Observe the following when removing or replacing the ESS Board:*

- *Do not replace the MCU Board and ESS Board at the same time. The data is saved on the EMMC Board on the ESS Board. Replace the MCU Board first, and then replace the ESS Board. At the time of each replacement, turn on the printer to restore the data into the MCU Board or ESS Board.*

  Replace MCU Board > Cycle pwr ON/OFF > Replace ESS Board > Cycle pwr ON/OFF
- *It is not necessary to back-up or restore data saved on the ESS Board by Diagnostic, etc. The data is automatically backed-up when the printer is turned off or in the Deep Sleep mode. When the printer is turned on, mismatched information is detected on the MCU Board, and then the information is corrected to be matched and restored into the MCU Board.*
- ***When replacing the ESS Board, it is necessary to move the EMMC Board from the current ESS Board to the replacement ESS Board.***

  Avoid using excessive pressure to remove or install the EMMC Board. Follow proper electrostatic discharge procedures to prevent damage to the ESS Card during replacement.

1. Remove the Left Side Cover, REP 19.2.1.
2. Remove the ESS Top Plate, REP 18.1.18.
3. Remove the FAX Board, REP 18.1.9.
4. Refer to Figure 1 to remove the two screws (silver, M3x6mm) attaching the FAX Plate and remove the FAX Plate with the ESS Harness Guide.

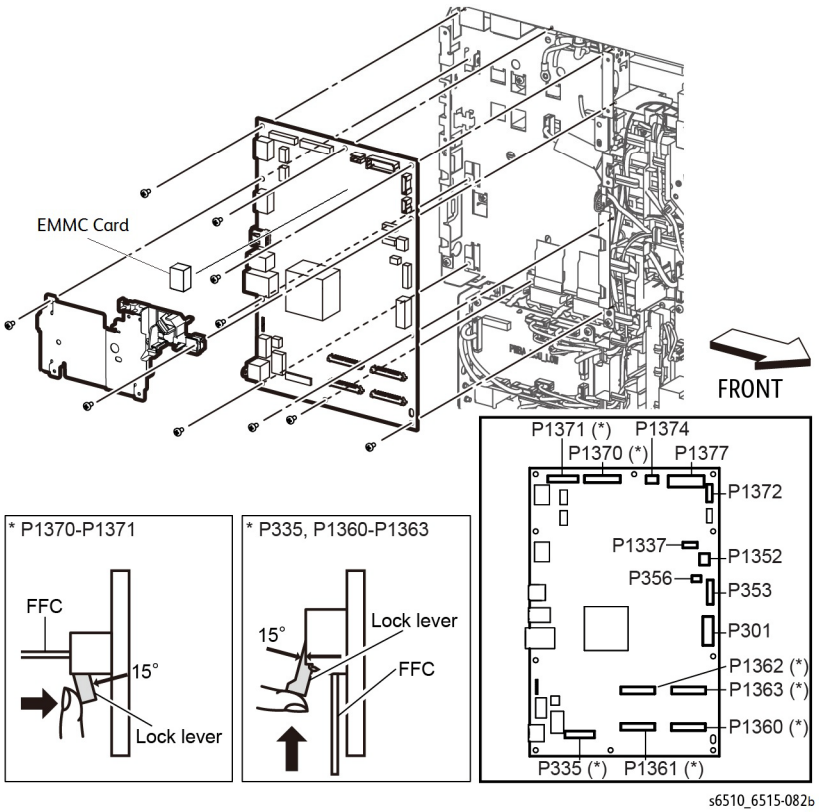

Figure 1 Remove the ESS Board (MFP)

5. Remove the two screws (silver, M3x6mm) attaching the ESS Lower Plate to the ESS Box.

CAUTION

In the following step, avoid breaking the FFC lock lever when releasing the FFC. Open the lever just far enough to release the FFC.

NOTE: *In the following step, when releasing the lock lever on the FFC connector, slightly open the lock lever to 15 degrees until the lock lever contacts the FFC connector as shown in Figure 1. After releasing the lock lever, hold the lever while gently pulling the FFC from the connector.*

6. Refer to Figure 1 to unplug the FFCs (P/J1360, P/J1361, P/J1362, P/J1363, P/J335) and the connectors (P/J301, P/J353, P/J356, P/J1337,P/J1352, P/J1370, P/J1371, P/J1372, P/J1374, P/J1377). When unplugging the FFC (P/J335), keep the cable clamp open
7. Refer to Figure 1 to remove the eight screws (silver, M3x6mm) that attach the ESS Board to the ESS Box and remove the board.
8. Refer to Figure 2 to carefully move the harnesses out of the way and remove the ESS Board from the frame leaving all harnesses and guides in-place.

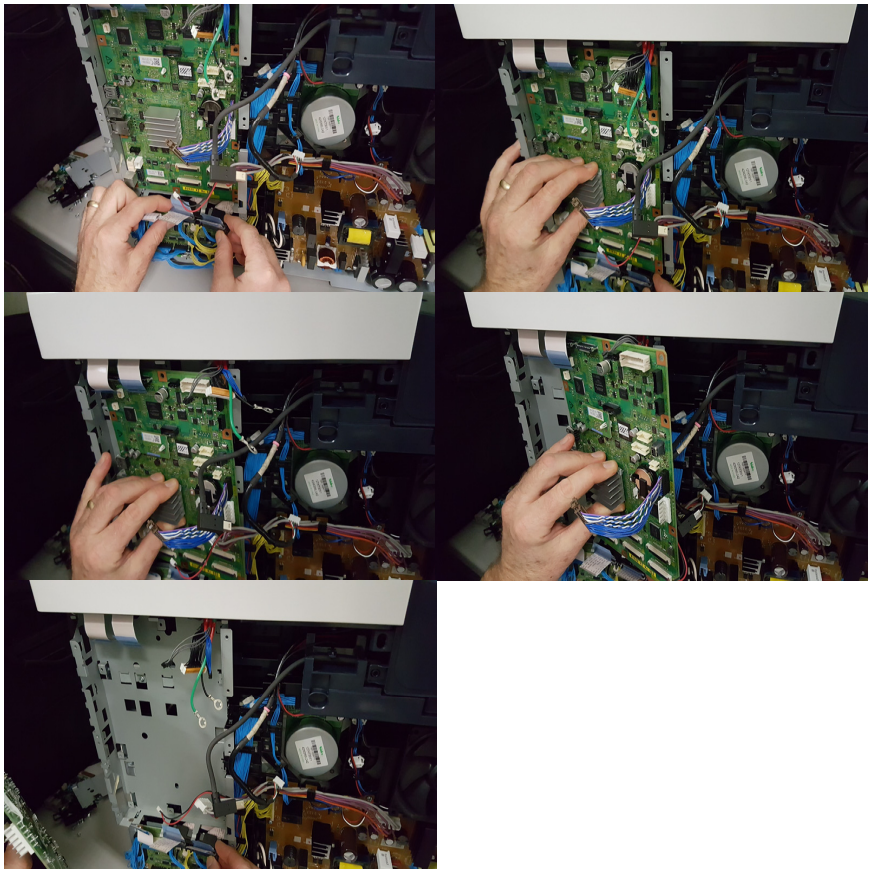

Figure 2

Replacement

CAUTION

Avoid damaging wires during replacement. When replacing wire harnesses, use factory-installed routes.

Be sure to move the EMMC Board from the old ESS Board to the new one.

REP 18.1.9 FAX Board (MFP only)

Parts List on PL 18.1 Item 9

Removal

WARNING

Switch off the electricity to the machine. Disconnect the power cord from the customer supply while performing tasks that do not need electricity. Electricity can cause death or injury. Moving parts can cause injury.

1. Remove the Left Side Cover, REP 19.2.1.
2. Remove the ESS Top Plate, REP 18.1.18.
3. Unplug the connector (P/J1350) from the FAX Board.
4. Refer to Figure 1 to remove the two screws (silver, M3x6mm) attaching the FAX Board.

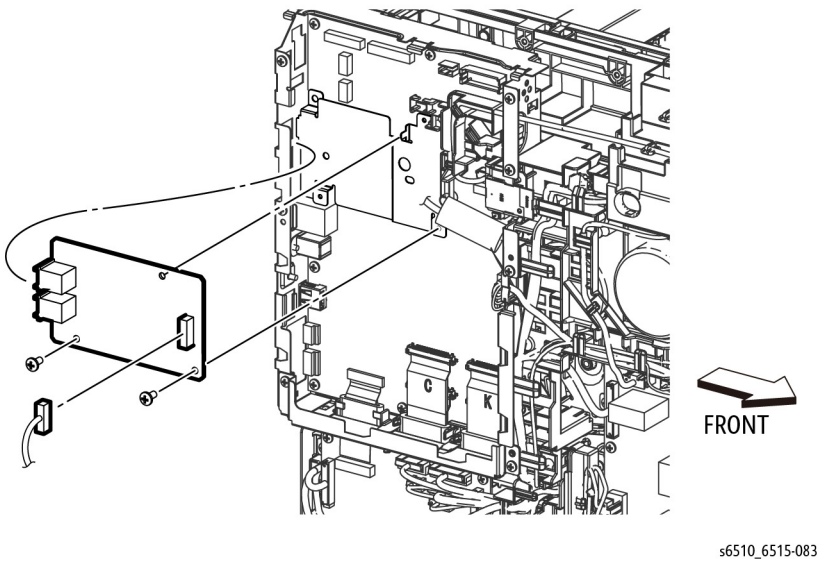

Figure 1 Remove the FAX Board (MFP)

REP 18.1.11 Wireless Module (MFP)

Parts List on PL 18.1 Item 11

Removal

WARNING

Switch off the electricity to the machine. Disconnect the power cord from the customer supply while performing tasks that do not need electricity. Electricity can cause death or injury. Moving parts can cause injury.

1. Remove the ESS Window, REP 19.2.98.
2. Refer to Figure 1 to push the WIFI Link in the direction of the arrow to remove the Wireless Module.

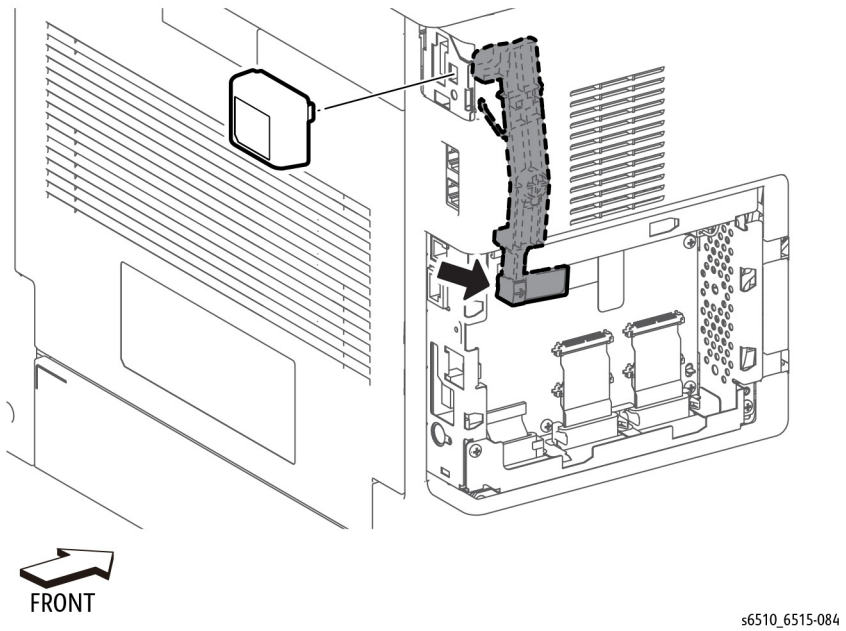

Figure 1 Remove the WIFI Module (MFP)

REP 18.1.14 Front USB Harness Assembly (MFP)

Parts List on PL 18.1 Item 14

Removal

WARNING

Switch off the electricity to the machine. Disconnect the power cord from the customer supply while performing tasks that do not need electricity. Electricity can cause death or injury. Moving parts can cause injury.

1. Remove the Left Side Cover, REP 19.2.1.
2. Remove the ESS Top Plate, REP 18.1.18.
3. Remove the UI Frame Assembly, REP 1.1.99.
4. Refer to Figure 1 to unplug the USB Harness connector (P/J1337) from the ESS Board.
5. Release the Front USB Harness from the harness guide.
6. Refer to Figure 1 to remove the one screw (silver, M3x6mm) attaching the USB Harness Mounting Bracket.
7. Refer to Figure 1 to remove the two screws (silver, M3x6mm) attaching the Front USB Harness Assembly to the USB Harness Mounting Bracket and remove the USB Harness.

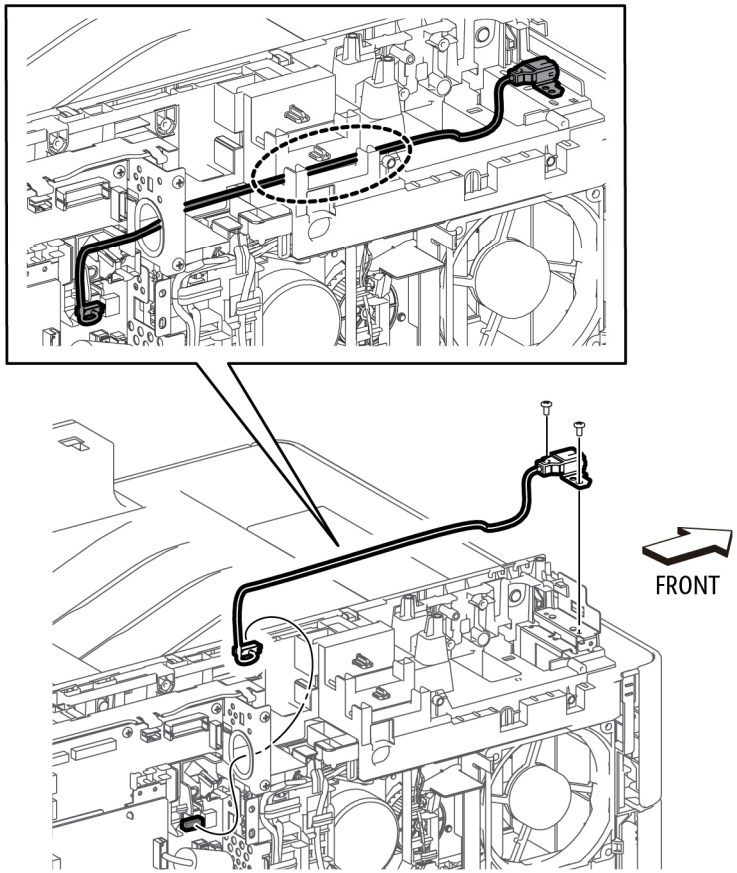

s6510_6515-085

Figure 1 Remove the Front USB Harness Assembly (MFP)

Replacement

CAUTION

Avoid damaging wires during replacement. When replacing wire harnesses, use factory-installed routes.

REP 18.1.16 LVPS Board (MFP)

Parts List on PL 18.1 Item 16

Removal

WARNING

Switch off the electricity to the machine. Disconnect the power cord from the customer supply while performing tasks that do not need electricity. Electricity can cause death or injury. Moving parts can cause injury.

1. Remove the Left Side Cover, REP 19.2.1.
2. Refer to Figure 1 to unplug the connectors (P/J281, P/J283, P/J284, P/J287, P/J288, P/J289, P/J291, P/J292) from the LVPS Board.
3. Refer to Figure 1 to remove the seven screws (silver, M3x6mm) attaching the LVPS Board to the LVPS Plate.

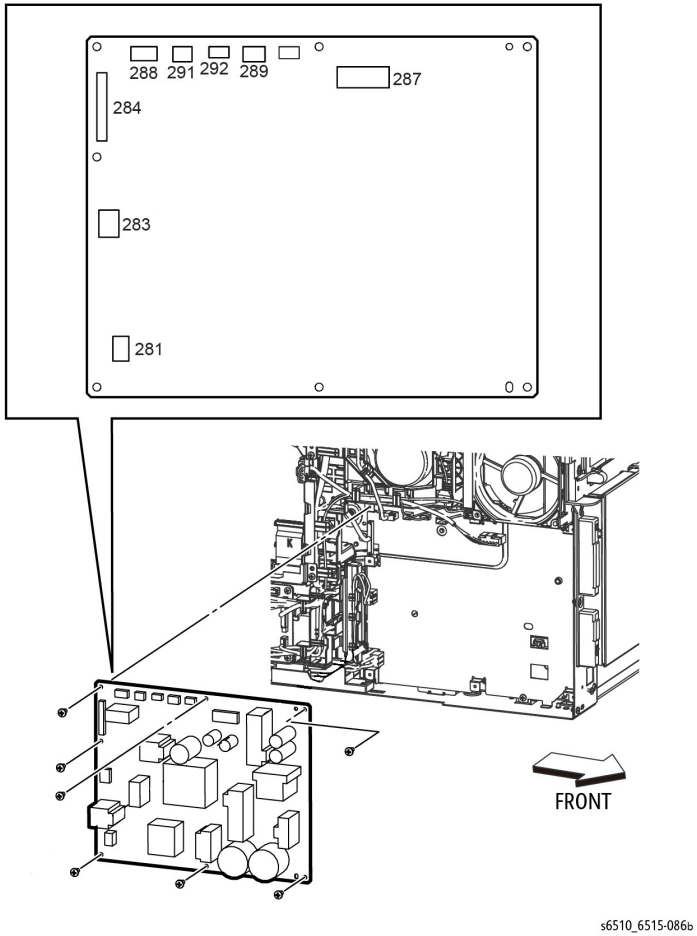

Figure 1 Remove the LVPS Board (MFP)

Replacement

When replacing the LVPS Board, be sure to place the holes in the board's upper and lower right corners onto the alignment tabs before inserting any screws.

REP 18.1.18 ESS Top Plate (MFP)

Parts List on PL 18.1 Item 18

Removal

WARNING

Switch off the electricity to the machine. Disconnect the power cord from the customer supply while performing tasks that do not need electricity. Electricity can cause death or injury. Moving parts can cause injury.

1. Remove the Left Side Cover, REP 19.2.1. REP 19.2.1
2. Refer to Figure 1 to remove the five screws (silver, M3x6mm), and remove the ESS Top Plate making sure to retain the WIFI Link with the plate.

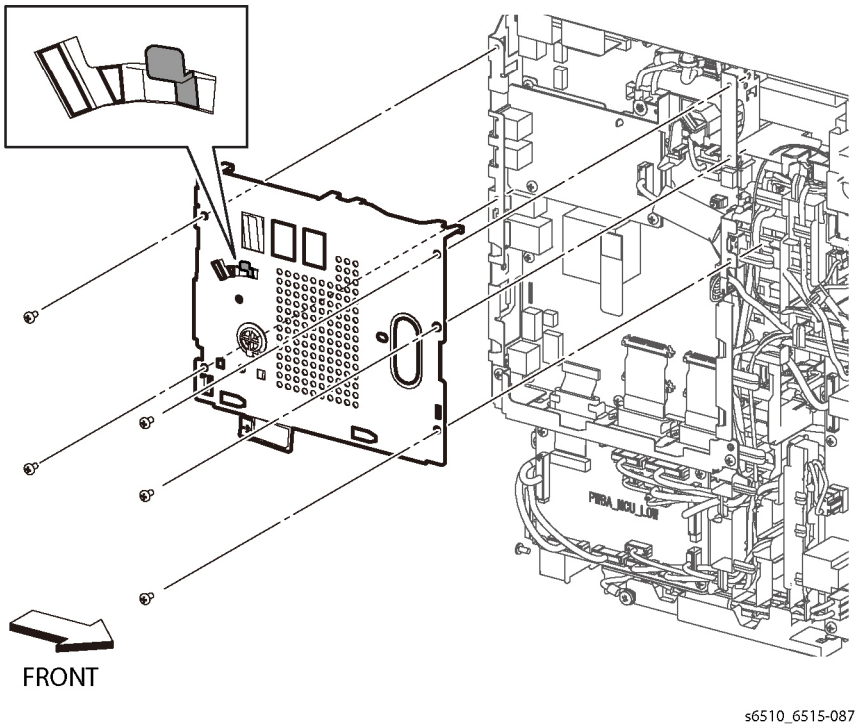

Figure 1 Remove the ESS Top Plate (MFP)

Replacement

When installing the ESS Top Plate:

1. Make sure the WIFI Link is locked into the ESS Top Plate and rotated clockwise as shown in Figure 2.
2. Position the ESS Top Plate so the three hooks of the ESS Box are inserted under the ESS Top Plate as shown in Figure 2.

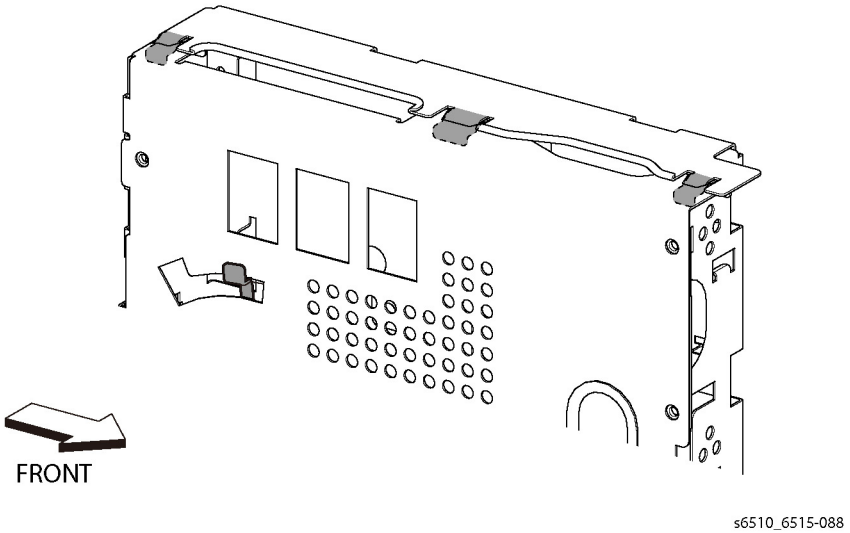

Figure 2 Replace the ESS Top Plate

REP 18.1.19 ESS Box (MFP)

Parts List on PL 18.1 Item 19

Removal

WARNING

Switch off the electricity to the machine. Disconnect the power cord from the customer supply while performing tasks that do not need electricity. Electricity can cause death or injury. Moving parts can cause injury.

1. Remove the Left Side Cover, REP 19.2.1.
2. Remove the ESS Board, REP 18.1.5.
3. Refer to Figure 1 to remove the five screws (silver, M3x6mm) attaching the ESS Box.

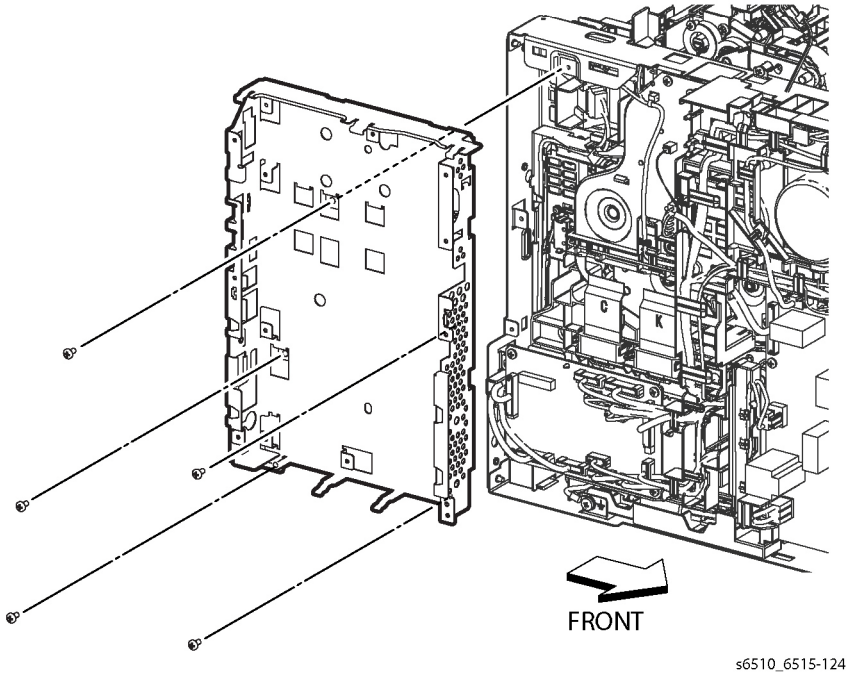

Figure 1 Remove the ESS Box (MFP)

REP 18.1.20 LVPS Plate (MFP)

Parts List on PL 18.1 Item 20

Removal

WARNING

Switch off the electricity to the machine. Disconnect the power cord from the customer supply while performing tasks that do not need electricity. Electricity can cause death or injury. Moving parts can cause injury.

1. Remove the LVPS Board, REP 18.1.16.
2. Refer to Figure 1 to release the two hooks on the harness guide and remove the guide.

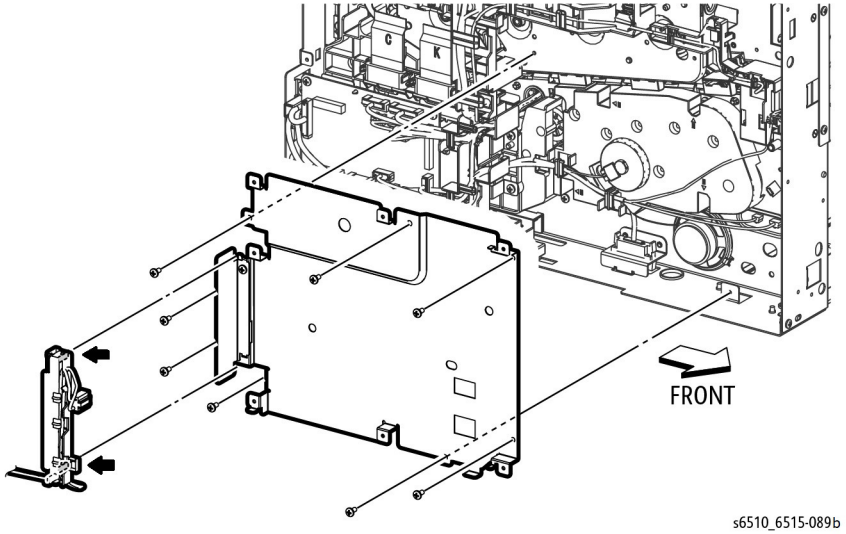

Figure 1 Remove the LVPS Plate

3. Refer to Figure 1 to remove the eight screws (silver, M3x6mm) attaching the LVPS Plate and remove the plate.

Replacement

CAUTION

Avoid damaging wires during replacement. When replacing wire harnesses, use factory-installed routes.

REP 18.1.21 MCU Plate (MFP)

Parts List on PL 18.1 Item 21

Removal

WARNING

Switch off the electricity to the machine. Disconnect the power cord from the customer supply while performing tasks that do not need electricity. Electricity can cause death or injury. Moving parts can cause injury.

1. Remove the Left Side Cover, REP 19.2.1.
2. Remove the MCU Board, REP 18.1.1.
3. Refer to Figure 1 to release the cables from the MCU Harness Guide and remove the guide.

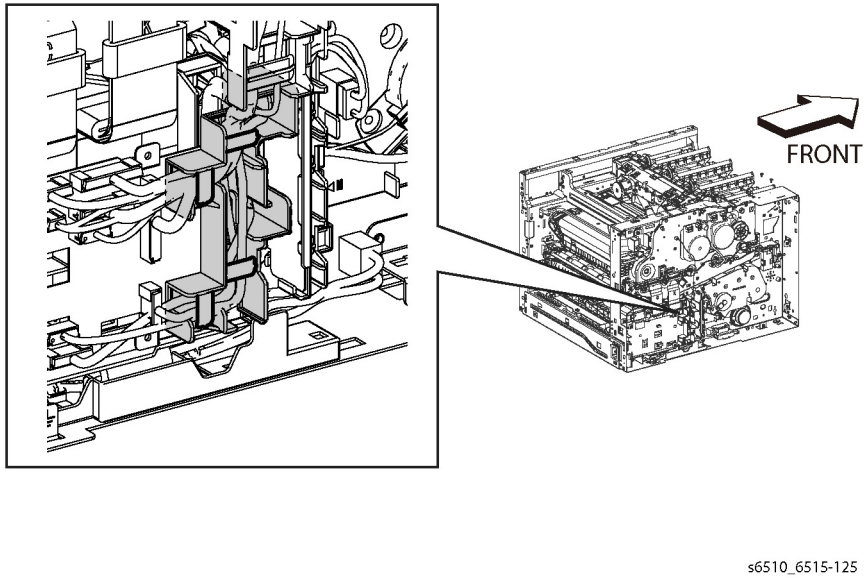

Figure 1 Release the Harnesses from the MCU Plate (MFP)

4. Refer to Figure 2 to remove the two screws (silver, M3x6mm) attaching the MCU Plate.

   To release the tabs at the right edge of the MCU Plate, remove screws from left edge of the LVPS Board and LVPS Plate as needed.

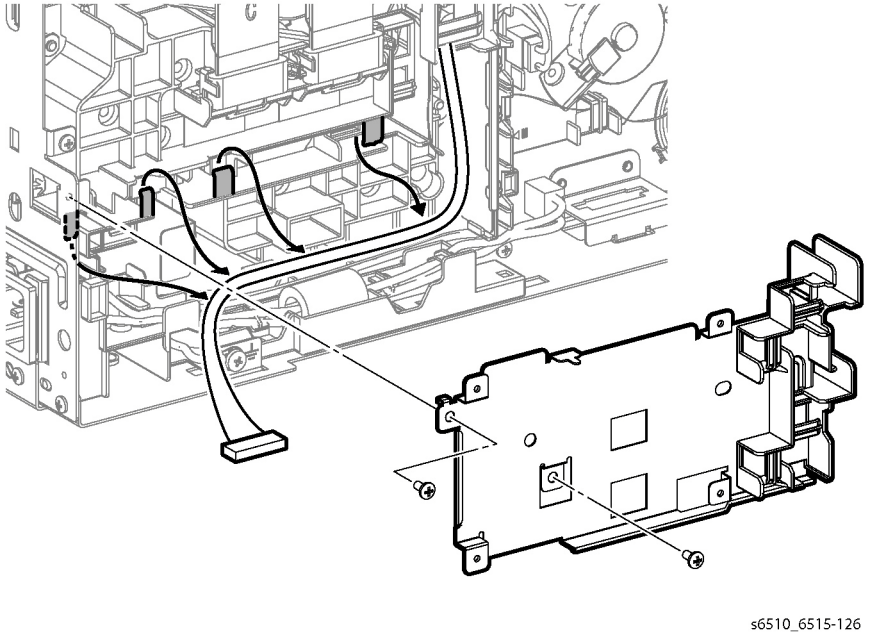

Figure 2 Remove the MCU Plate (MFP)

Replacement

When replacing the MCU Plate, place the tabs at the right edge of the plate under the tabs at the left edge of the LVPS Plate.

REP 18.2.1 HVPS Board and Guide Assembly (MFP)

Parts List on PL 18.2 Item 1

Removal

WARNING

Switch off the electricity to the machine. Disconnect the power cord from the customer supply while performing tasks that do not need electricity. Electricity can cause death or injury. Moving parts can cause injury.

1. Remove the Right Side Cover, REP 19.1.97.
2. Remove the Left Side Cover, REP 19.2.1.
3. Remove the Drum Cartridges Y, M, C, K, REP 8.1.1.
4. Remove the Transfer Belt Unit, REP 6.1.1.
5. Remove the LPH Color Head Assembly, REP 2.1.1.
6. Remove the MCU Board, REP 18.1.1.
7. Remove the LPH Xerographic CRUM FFC, REP 2.1.99.
8. Refer to Figure 1 to remove the HVPS Toner Cover, REP 18.2.3.

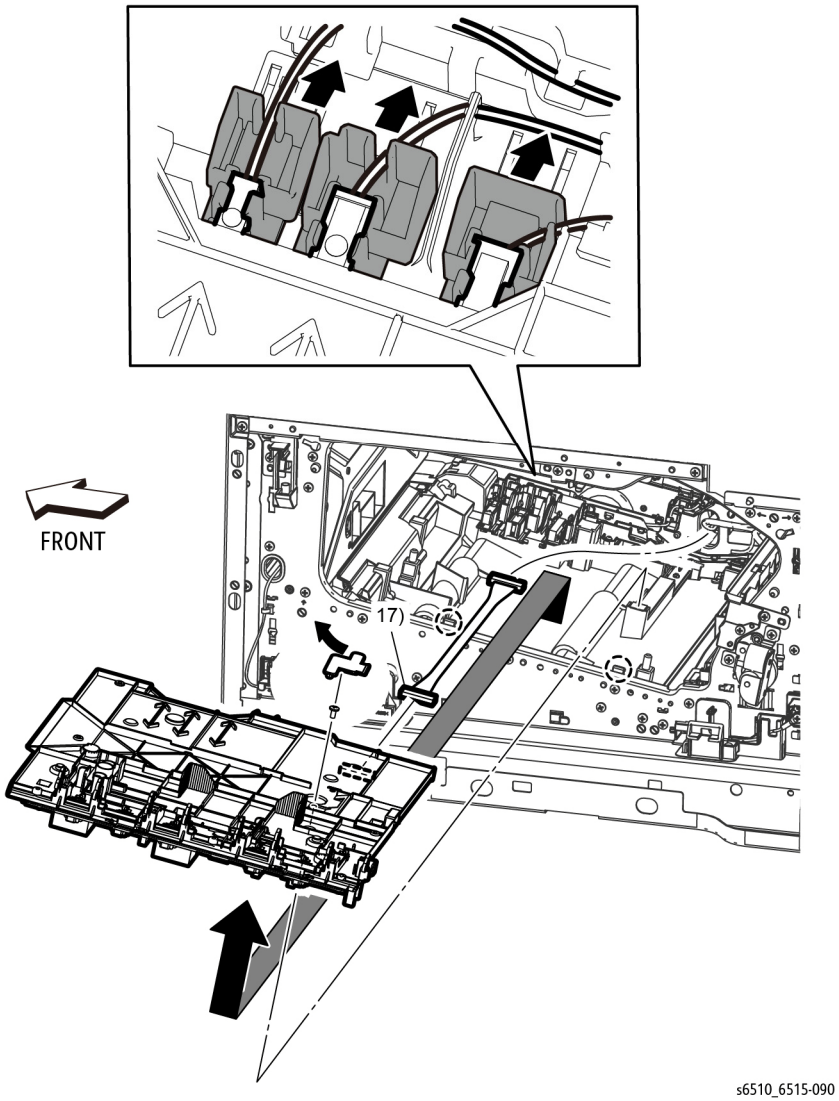

Figure 1 Remove the HVPS Guide Assembly (MFP)

NOTE: *In the following step, if your screwdriver is longer than six inches, you must remove the Top Cover (REP 19.1.99).*

9. Refer to Figure 1 to remove the screw (silver, M3x6mm) located under the HVPS Toner Cover.
10. Refer to Figure 1 to push the faston holders in the direction of the arrows to remove the faston terminals (P/J501, P/J502, T601).

11. Refer to Figure 1 to unplug the connector (P/J101) from the HVPS Guide Assembly.
12. Refer to Figure 1 to release the two hooks and remove the HVPS Guide Assembly in the direction of the arrow.

Replacement

To replace the HVPS Guide Assembly:

1. Connect the connector P/J101.
2. Place the HVPS Guide Assembly into its installed position making sure to insert the alignment tabs at the left edge of the board into their slots.
3. Slide the faston connector holders towards the board to reconnect the plugs.

   Make sure to attach the faston connectors (P/J501, P/J502, T601: K 1st Supply Harness Assembly, YMC 1st Supply Harness Assembly, and Trans Supply Harness Assembly) at the initial position as shown in Figure 2.

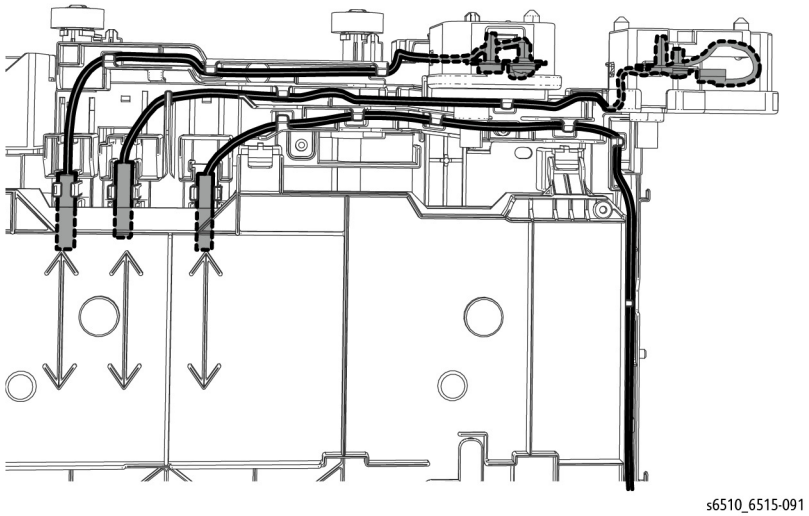

Figure 2 Re-attaching HVPS Guide Harnesses (MFP)

REP 18.2.3 HVPS Toner Cover (MFP)

Parts List on PL 18.2 Item 3

Removal

WARNING

Switch off the electricity to the machine. Disconnect the power cord from the customer supply while performing tasks that do not need electricity. Electricity can cause death or injury. Moving parts can cause injury.

1. Remove the Drum Cartridges Y, M, C, K, REP 8.1.1.
2. Refer to Figure 1 to remove the HVPS Toner Cover from the HVPS Board.

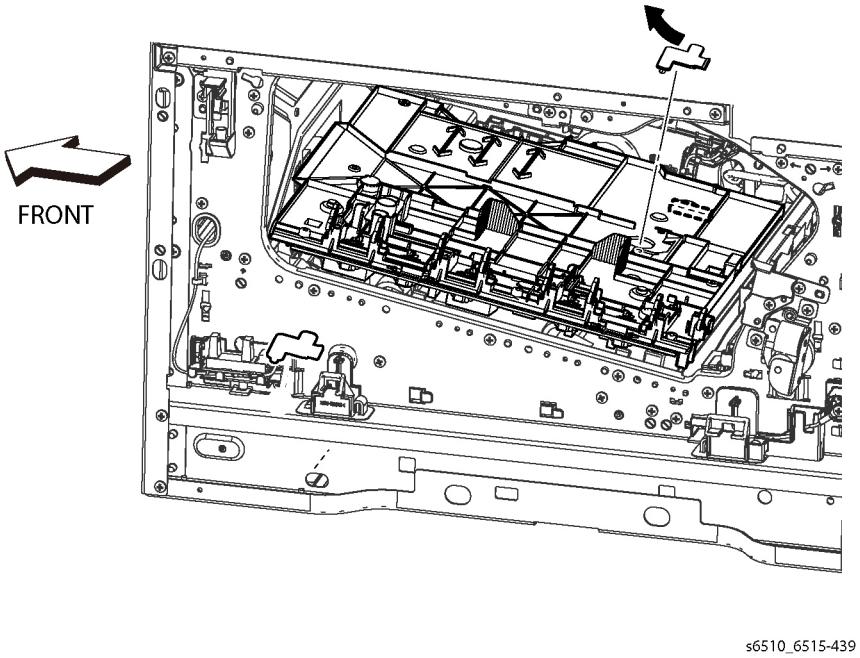

Figure 1 Remove the HVPS Toner Cover (MFP)

REP 18.2.99 Second Bias Transfer Roll Housing Kit (MFP)

Parts List on PL 18.2 Item 99

Removal

WARNING

Switch off the electricity to the machine. Disconnect the power cord from the customer supply while performing tasks that do not need electricity. Electricity can cause death or injury. Moving parts can cause injury.

1. Remove the Right Side Cover, REP 19.1.97.
2. Remove the Rear Cover, REP 19.2.99.
3. Refer to Figure 1 to remove the one screw (silver, M3x6mm) attaching the High Voltage Harness.

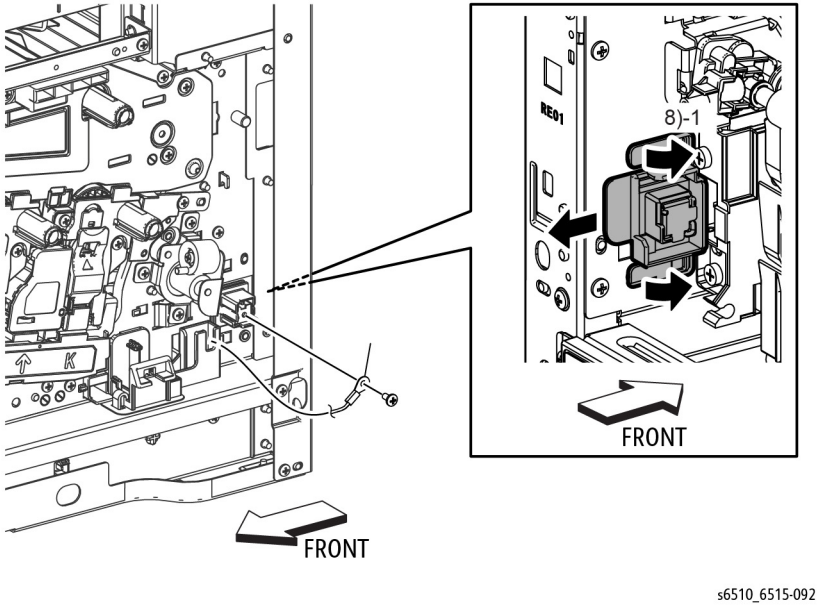

Figure 1 Remove the Second Bias Transfer Housing (MFP)

4. Refer to Figure 1 to release two hooks on the Second Bias Transfer Housing and remove the housing.

REP 18.3.1 Inlet Harness Assembly Kit (MFP)

Parts List on PL 18.3 Item 1

Removal

WARNING

Switch off the electricity to the machine. Disconnect the power cord from the customer supply while performing tasks that do not need electricity. Electricity can cause death or injury. Moving parts can cause injury.

1. Remove the Left Side Cover, REP 19.2.1.
2. Remove the PH Drive Assembly, REP 3.1.2.
3. Refer to Figure 1 to release the AC Fuser Harness from the harness guide.
4. Refer to Figure 1 to remove the screw attaching the ground harness.

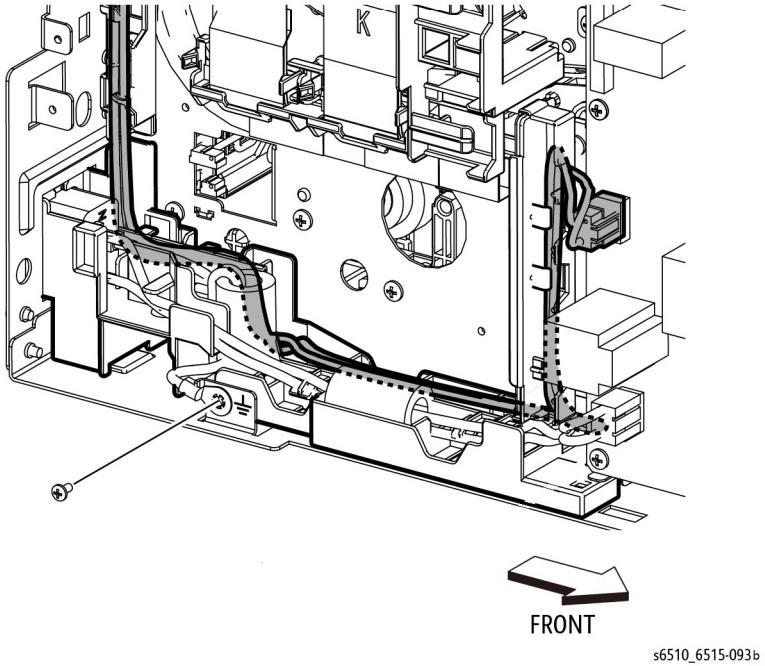

Figure 1 Remove the AC Fuser Harness (MFP)

5. Refer to Figure 2 to unplug the Inlet Harness Assembly connector (P/J281).
6. Refer to Figure 2 to remove the screw attaching the Inlet Harness Assembly and remove the harness assembly.

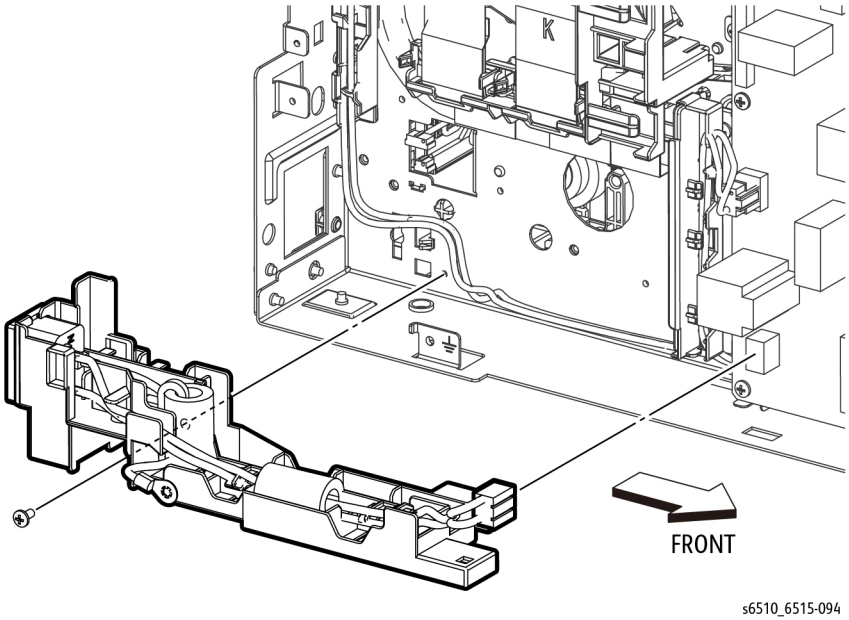

Figure 2 Remove the Inlet Harness Assembly (MFP)

Replacement

CAUTION

Avoid damaging wires during replacement. When replacing wire harnesses, use factory-installed routes.

REP 18.3.4 Rear Interlock Harness Assembly (MFP)

Parts List on PL 18.3 Item 4

Removal

WARNING

Switch off the electricity to the machine. Disconnect the power cord from the customer supply while performing tasks that do not need electricity. Electricity can cause death or injury. Moving parts can cause injury.

1. Remove the Left Side Cover, REP 19.2.1.
2. Remove the ESS Board, REP 18.1.5.
3. Remove the ESS Box, REP 18.1.19.
4. Refer to Figure 1 to unplug the connector (P/J292) from the LVPS Board and release the cable from the cable guide.

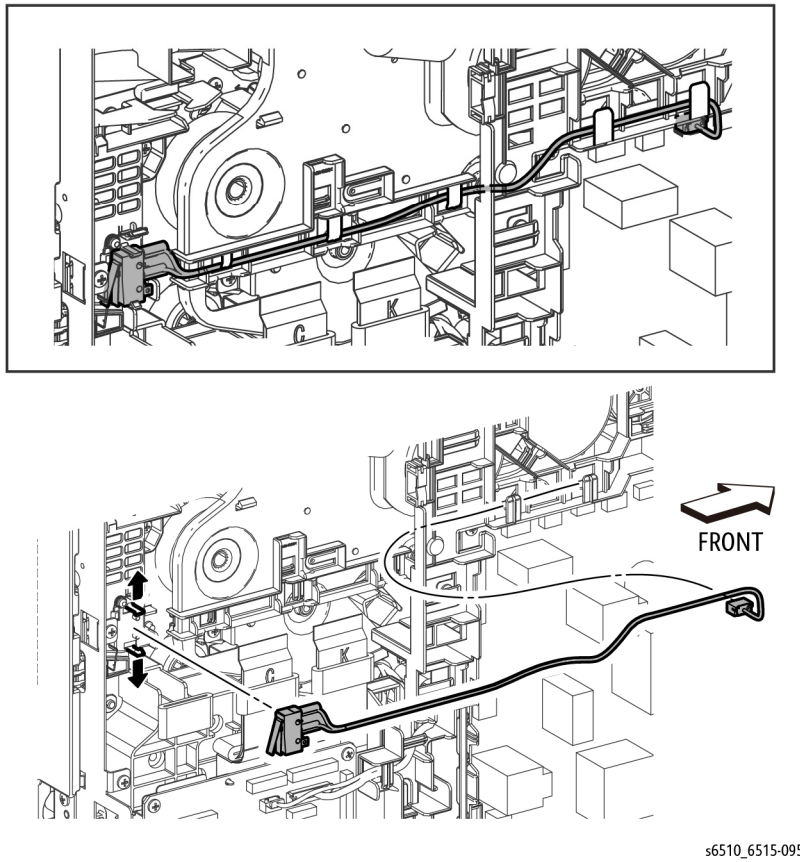

Figure 1 Remove the Rear Interlock Harness Assembly (MFP)

5. Refer to Figure 1 to release the two hooks and remove the Rear Interlock Harness Assembly.

Replacement

CAUTION

Avoid damaging wires during replacement. When replacing wire harnesses, use factory-installed routes.

REP 18.3.5 Side Interlock Harness Assembly (MFP)

Parts List on PL 18.3 Item 5

Removal

WARNING

Switch off the electricity to the machine. Disconnect the power cord from the customer supply while performing tasks that do not need electricity. Electricity can cause death or injury. Moving parts can cause injury.

1. Remove the Right Side Cover, REP 19.1.97.
2. Remove the Left Side Cover, REP 19.2.1.
3. Remove the Front Inner Cover, REP 19.1.5.

NOTE: *In the following steps, be sure to note the harness routing to avoid damaging wires during replacement.*

4. Remove the Main Fan, REP 4.1.1.
5. Remove the LVPS Board, REP 18.1.16.
6. Remove the LVPS Plate, REP 18.1.20.
7. Remove the Main Fan Duct, REP 4.1.2.
8. Refer to Figure 1 to release the harness of the Side Interlock Harness Assembly from the three hooks.

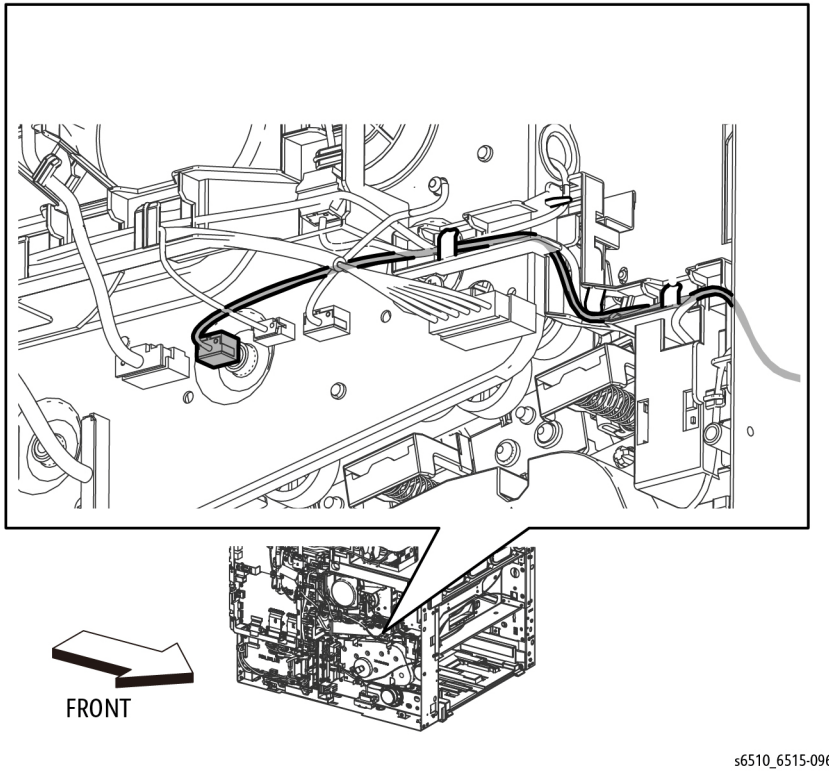

Figure 1 Release the Side Interlock Harness from the Hooks

9. Refer to Figure 2 to remove the screw (silver, M3x6mm) attaching the Side Interlock Harness Assembly and remove the harness.

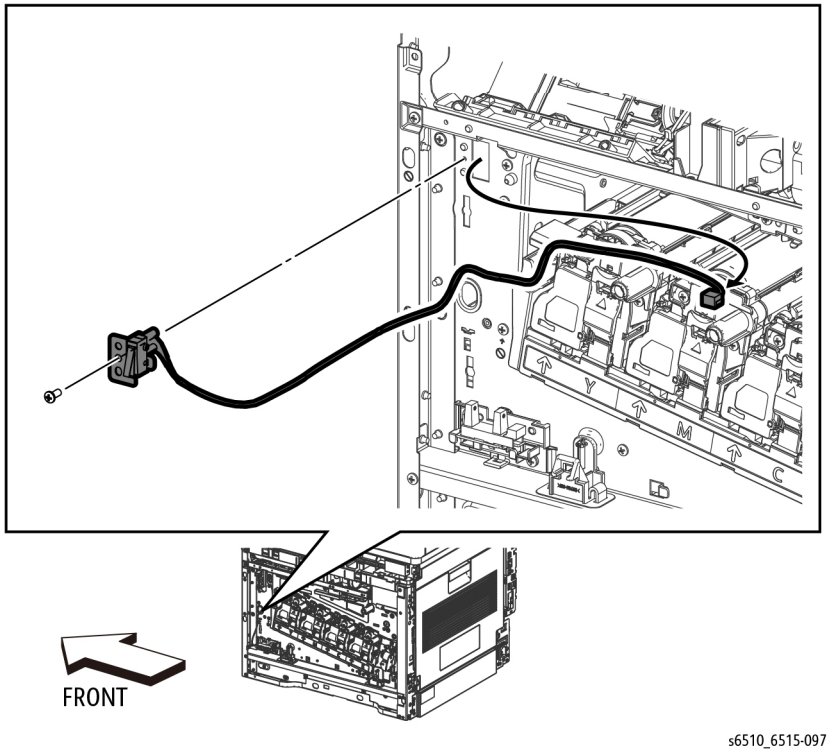

Figure 2 Remove the Side Interlock Harness Assembly (MFP)

Replacement

CAUTION

Avoid damaging wires during replacement. When replacing wire harnesses, use factory-installed routes.

REP 18.3.6 OPF Harness Assembly (MFP)

Parts List on PL 18.3 Item 6

Removal

WARNING

Switch off the electricity to the machine. Disconnect the power cord from the customer supply while performing tasks that do not need electricity. Electricity can cause death or injury. Moving parts can cause injury.

1. Remove the Left Side Cover, REP 19.2.1.

NOTE: *In the following steps, be sure to note the harness routing to avoid damaging wires during replacement.*

2. Remove the LVPS Board, REP 18.1.16.
3. Remove the LVPS Plate, REP 18.1.20.
4. Refer to Figure 1 to unplug the connector (P/J800) and release the harness portion of the OPF Harness Assembly from the four hooks of the harness guide.

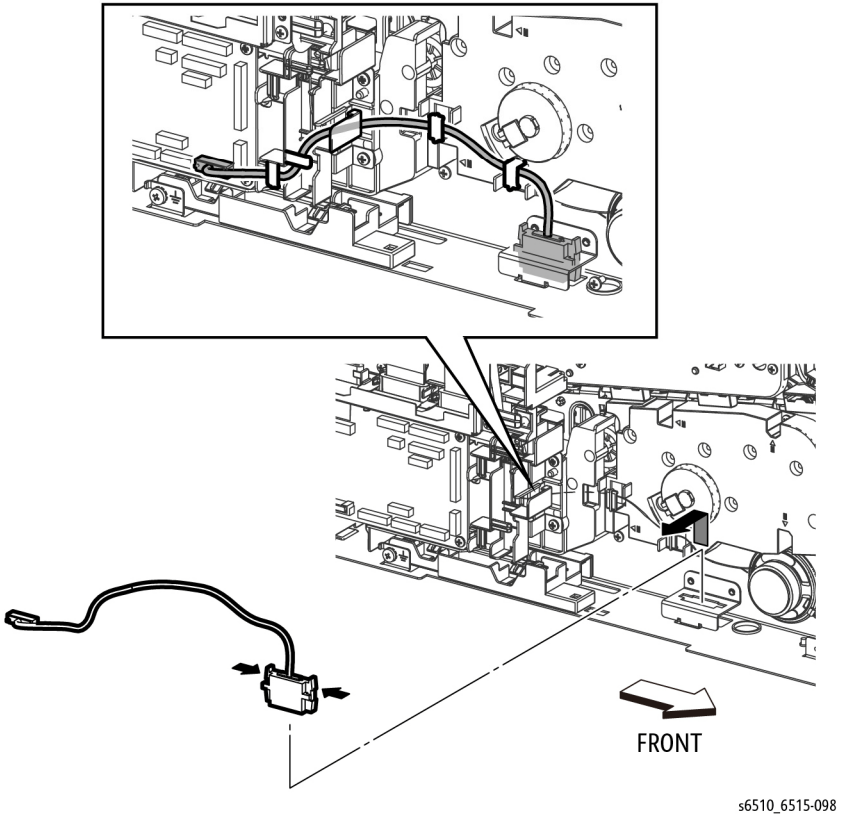

Figure 1 Remove the OPF Harness Assembly (MFP)

5. Refer to Figure 1 to push the two hooks on the OPF Harness Assembly and remove the OPF Harness Assembly.

Replacement

CAUTION

Avoid damaging wires during replacement. When replacing wire harnesses, use factory-installed routes.

REP 18.5.1 MCU Board (SFP)

Parts List on PL 18.5 Item 1

Removal

WARNING

Switch off the electricity to the machine. Disconnect the power cord from the customer supply while performing tasks that do not need electricity. Electricity can cause death or injury. Moving parts can cause injury.

CAUTION

1. **Before starting removal, print a configuration page and verify the FW version.**
2. **Replace the MCU Board.**
3. **Print config page again.**
4. **Verify the FW and reload FW if not the current version.**

CAUTION

Never replace the MCU Board and ESS Board at the same time.

NOTE: *Observe the following when removing or replacing the MCU Board:*

- *Do not replace the MCU Board and ESS Board at the same time. The data is saved on the EMMC Board on the ESS Board. Replace the MCU Board first, and then replace the ESS Board. At the time of each replacement, turn on the printer to restore the data into the MCU Board or ESS Board.*

  Replace MCU Board > Cycle pwr ON/OFF > Replace ESS Board > Cycle pwr ON/OFF
- *It is not necessary to back-up or restore data saved on the ESS Board by Diagnostic, etc. The data is automatically backed-up when the printer is turned off or in the Deep Sleep mode. When the printer is turned on, mismatched information is detected on the MCU Board, and then the information is corrected to be matched and restored into the MCU Board*

1. Remove the Left Side Cover, REP 19.4.1.

CAUTION

In the following step, avoid breaking the FFC lock lever when releasing the FFC. Open the lever just far enough to release the FFC.

NOTE: *In the following step, when releasing the lock lever on the FFC connector, slightly open the lock lever to 15 degrees until the lock lever contacts the FFC connector as shown in Figure 1. After releasing the lock lever, hold the lever while gently pulling the FFC from the connector.*

2. Refer to Figure 1 to unplug the 12 connectors from the MCU Board (P/J100, P/J110, P/J120, P/J140, P/J270, P/J280, P/J400, P/J460, P/J480, P/J540, P/J570, P/J800) and the FFC (P/J300).

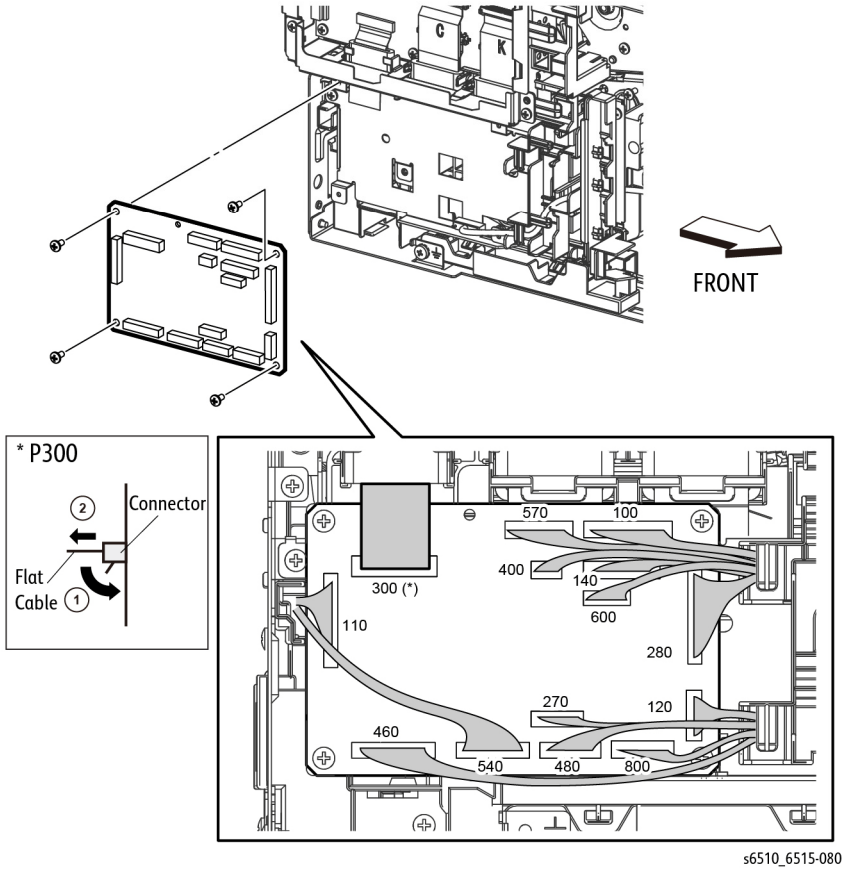

Figure 1 Remove the MCU Board (SFP)

3. Refer to Figure 1 to remove the four screws (silver, M3x6mm) attaching the MCU Board and remove the board.

Replacement

It is necessary to restore NVM values. See the diagnostic procedure dc363 for information.

REP 18.5.2 ESS MCU FFC (SFP)

Parts List on PL 18.5 Item 2

Removal

WARNING

Switch off the electricity to the machine. Disconnect the power cord from the customer supply while performing tasks that do not need electricity. Electricity can cause death or injury. Moving parts can cause injury.

1. Remove the Left Side Cover, REP 19.2.1.
2. Refer to Figure 1 to remove the two screws (silver, M3x6mm) attaching the ESS Lower Plate and remove the plate.

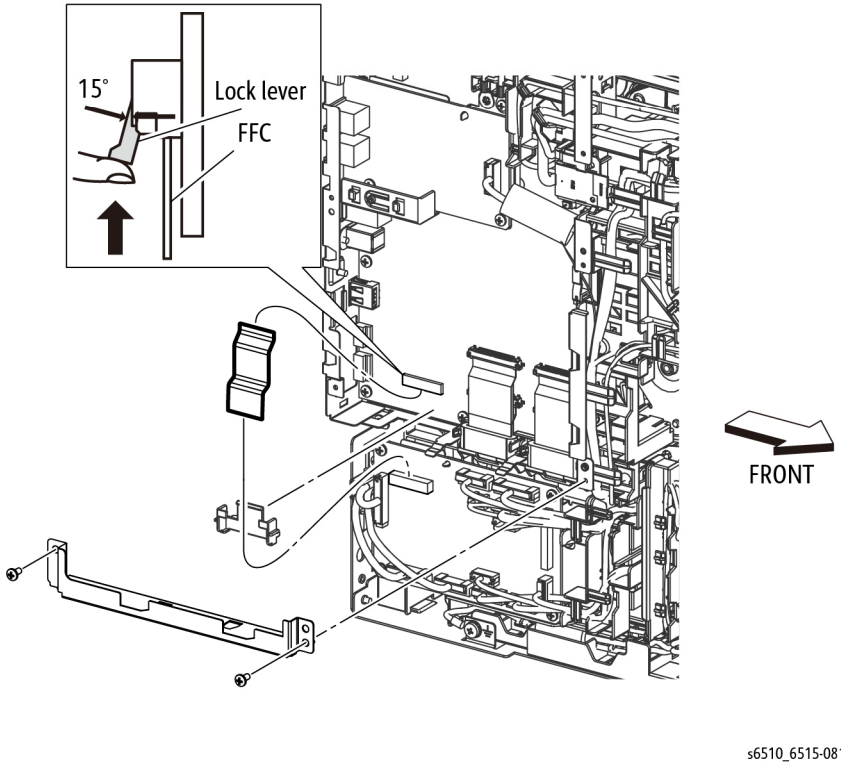

Figure 1 Remove the ESS MCU FFC (SFP)

CAUTION

In the following step, avoid breaking the FFC lock lever when releasing the FFC. Open the lever just far enough to release the FFC.

NOTE: *In the following step, when releasing the lock lever on the FFC connector, slightly open the lock lever to 15 degrees until the lock lever contacts the FFC connector as shown in Figure 1. After releasing the lock lever, hold the lever while gently pulling the FFC from the connector.*

3. Unplug the connectors (P/J300, P/J335) and remove the ESS MCU FFC.
4. Remove the MCU Color Guide FFC.

REP 18.5.5 ESS Board (SFP)

Parts List on PL 18.5 Item 5

Removal

WARNING

Switch off the electricity to the machine. Disconnect the power cord from the customer supply while performing tasks that do not need electricity. Electricity can cause death or injury. Moving parts can cause injury.

CAUTION

1. **Before starting removal, print a configuration page and verify the FW version.**
2. **Replace the ESS Board**
3. **Print config page again.**
4. **Verify the FW and reload FW if not the current version.**

CAUTION

Never replace the MCU Board and ESS Board at the same time.

NOTE: *Observe the following when removing or replacing the ESS Board:*

- *Do not replace the MCU Board and ESS Board at the same time. The data is saved on the EMMC Board on the ESS Board. Replace the MCU Board first, and then replace the ESS Board. At the time of each replacement, turn on the printer to restore the data into the MCU Board or ESS Board.*

  Replace MCU Board > Cycle pwr ON/OFF > Replace ESS Board > Cycle pwr ON/OFF
- *It is not necessary to back-up or restore data saved on the ESS Board by Diagnostic, etc. The data is automatically backed-up when the printer is turned off or in the Deep Sleep mode. When the printer is turned on, mismatched information is detected on the MCU Board, and then the information is corrected to be matched and restored into the MCU Board.*
- *If there are additional options installed on the ESS Board, these options must be moved to the replacement ESS Board.*
- *When replacing the ESS Board, it is necessary to move the EMMC Board from the current ESS Board to the replacement ESS Board.*

  Avoid using excessive pressure to remove or install the EMMC Board. Follow proper electrostatic discharge procedures to prevent damage to the ESS Board and options during replacement.

1. Remove the Left Side Cover, REP 19.4.1.
2. Remove the ESS Top Plate, REP 18.5.18.
3. Remove the two screws (silver, M3x6mm) attaching the ESS Lower Plate to the ESS Box.

CAUTION

In the following step, avoid breaking the FFC lock lever when releasing the FFC. Open the lever just far enough to release the FFC.

NOTE: *In the following step, when releasing the lock lever on the FFC connector, slightly open the lock lever to 15 degrees until the lock lever contacts the FFC connector as shown in Figure 1. After releasing the lock lever, hold the lever while gently pulling the FFC from the connector.*

4. Refer to Figure 1 to unplug the FFCs (P/J1360, P/J1361, P/J1362, P/J1363, P/J335) and the connectors (P/J301, P/J353, P/J356, P/J1337,P/J1352, P/J1370, P/J1371, P/J1372, P/J1374, P/J1377). When unplugging the FFC (P/J335), keep the cable clamp open.

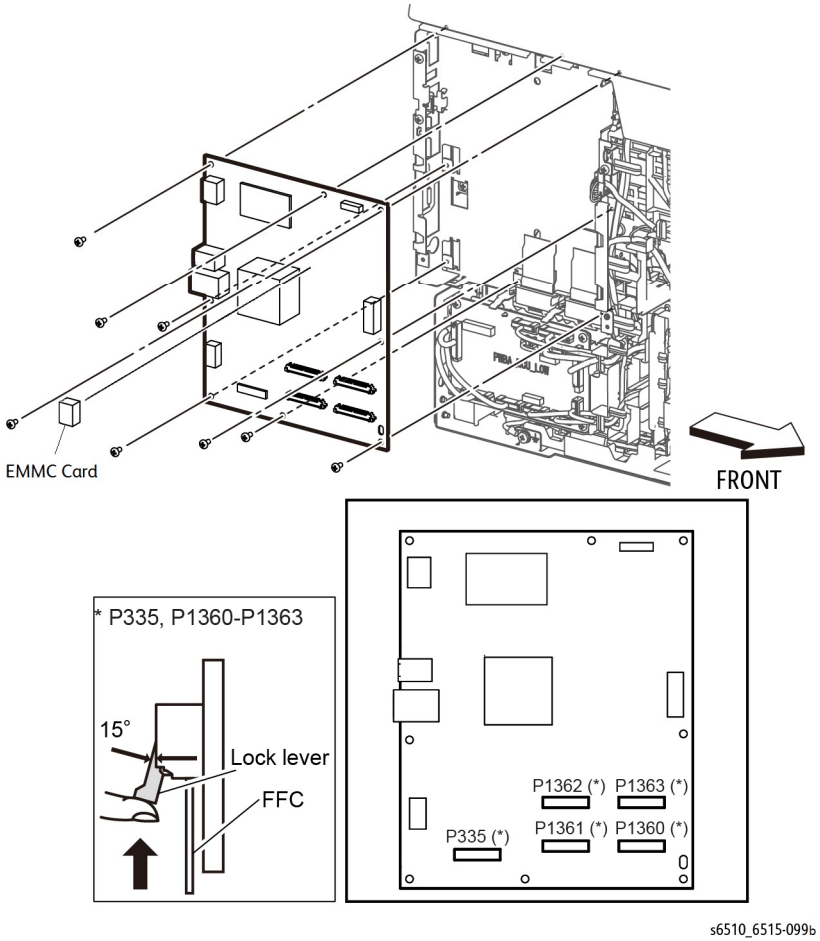

Figure 1 Remove the ESS Board (SFP)

5. Refer to Figure 1 to remove the eight screws (silver, M3x6mm) that attach the ESS Board to the ESS Box and remove the board.

Replacement

CAUTION

Avoid damaging wires during replacement. When replacing wire harnesses, use factory-installed routes.

Be sure to move the EMMC Board from the old ESS Board to the new one.

REP 18.5.11 Wireless Module (SFP)

Parts List on PL 18.5 Item 11

Removal

WARNING

Switch off the electricity to the machine. Disconnect the power cord from the customer supply while performing tasks that do not need electricity. Electricity can cause death or injury. Moving parts can cause injury.

1. Remove the ESS Window, REP 19.4.98.
2. Refer to Figure 1 to push the WIFI Link in the direction of the arrow to remove the Wireless Module.

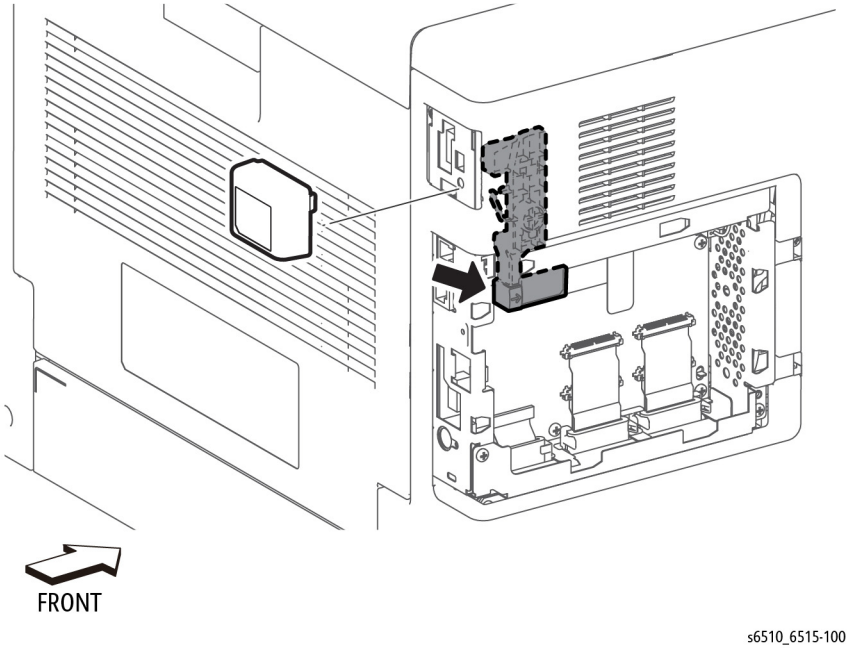

Figure 1 Remove the WIFI Module (SFP)

REP 18.5.16 LVPS Board (SFP)

Parts List on PL 18.5 Item 16

Removal

WARNING

Switch off the electricity to the machine. Disconnect the power cord from the customer supply while performing tasks that do not need electricity. Electricity can cause death or injury. Moving parts can cause injury.

1. Remove the Left Side Cover, REP 19.4.1.
2. Refer to Figure 1 to unplug the connectors (P/J281, P/J283, P/J284, P/J287, P/J288, P/J289, P/J291, P/J292) from the LVPS Board.
3. Refer to Figure 1 to remove the seven screws (silver, M3x6mm) attaching the LVPS Board to the LVPS Plate.

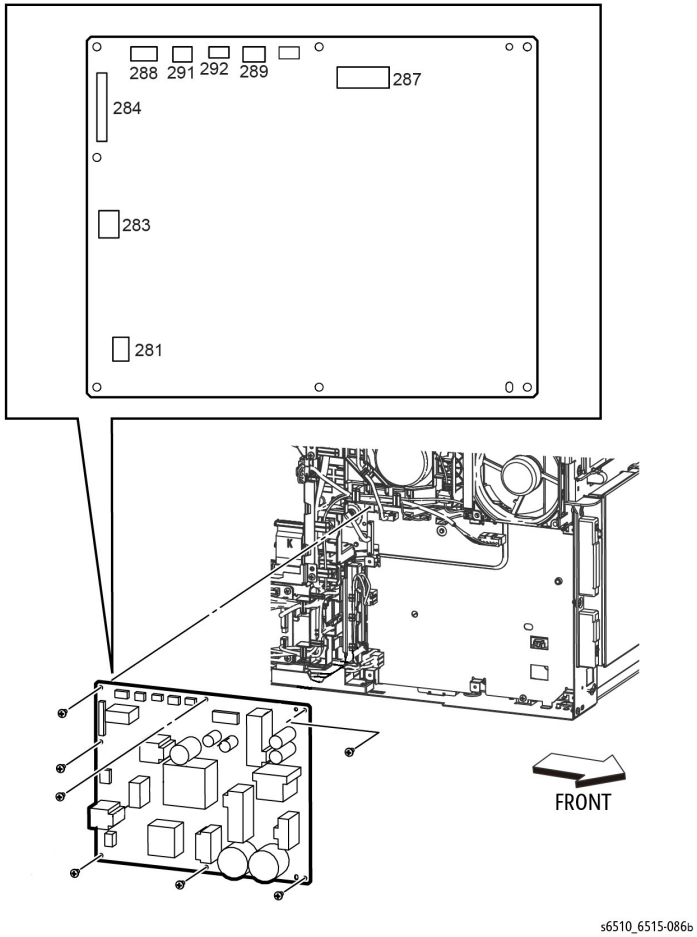

Figure 1 Remove the LVPS Board (SFP)

REP 18.5.18 ESS Top Plate (SFP)

Parts List on PL 18.5 Item 18

Removal

WARNING

Switch off the electricity to the machine. Disconnect the power cord from the customer supply while performing tasks that do not need electricity. Electricity can cause death or injury. Moving parts can cause injury.

1. Remove the Left Side Cover, REP 19.4.1.
2. Refer to Figure 1 to remove the four screws (silver, M3x6mm), and remove the ESS Top Plate with the WIFI Link.

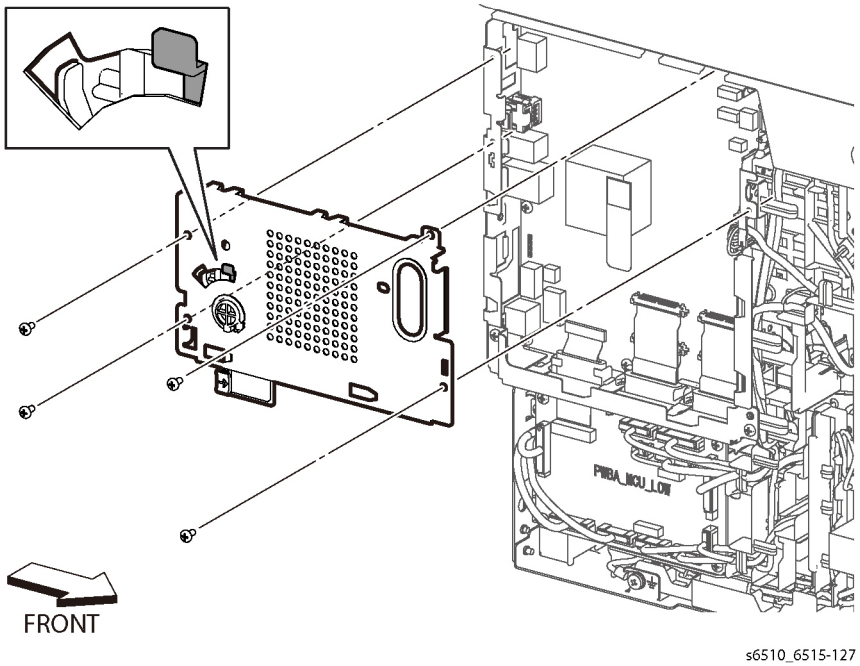

Figure 1 Remove the ESS Top Plate (SFP)

Replacement

When installing the ESS Top Plate:

1. Make sure the WIFI Link is locked into the ESS Top Plate and rotated clockwise as shown in Figure 2.
2. Position the ESS Top Plate so the three tabs at the top of the ESS Box are inserted under the ESS Top Plate as shown in Figure 2.

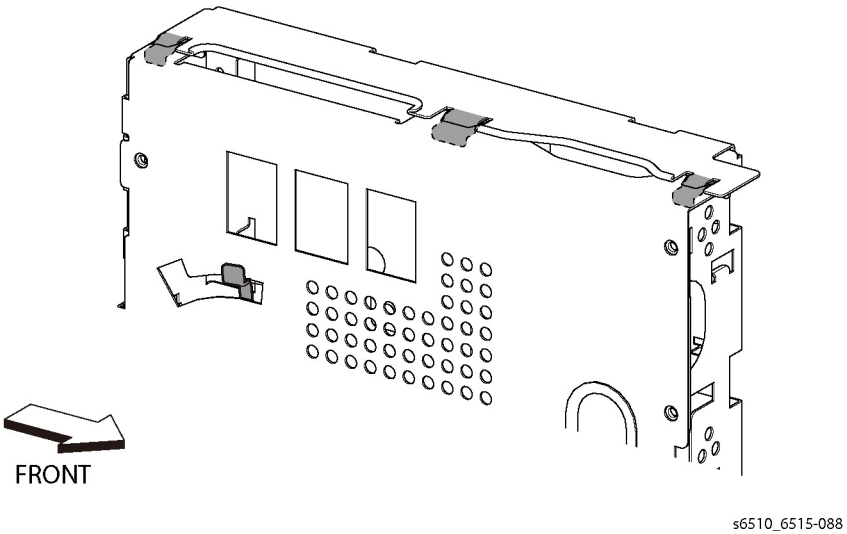

Figure 2 Replace the ESS Top Plate

REP 18.5.19 ESS Box (SFP)

Parts List on PL 18.5 Item 19

Removal

WARNING

Switch off the electricity to the machine. Disconnect the power cord from the customer supply while performing tasks that do not need electricity. Electricity can cause death or injury. Moving parts can cause injury.

1. Remove the Left Side Cover, REP 19.4.1.
2. Remove the ESS Board, REP 18.5.5.
3. Refer to Figure 1 to remove the five screws (silver, M3x6mm) attaching the ESS Box and remove the box.

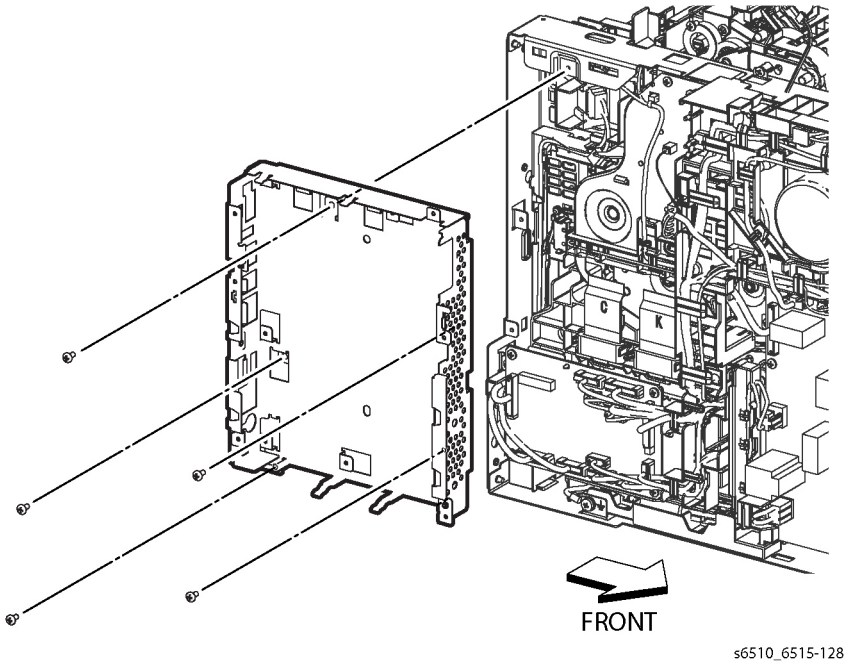

Figure 1 Remove the ESS Box (SFP)

REP 18.5.20 LVPS Plate (SFP)

Parts List on PL 18.5 Item 20

Removal

WARNING

Switch off the electricity to the machine. Disconnect the power cord from the customer supply while performing tasks that do not need electricity. Electricity can cause death or injury. Moving parts can cause injury.

1. Remove the LVPS Board, REP 18.5.16.
2. Refer to Figure 1 to release the two hooks on the harness guide and remove the guide.

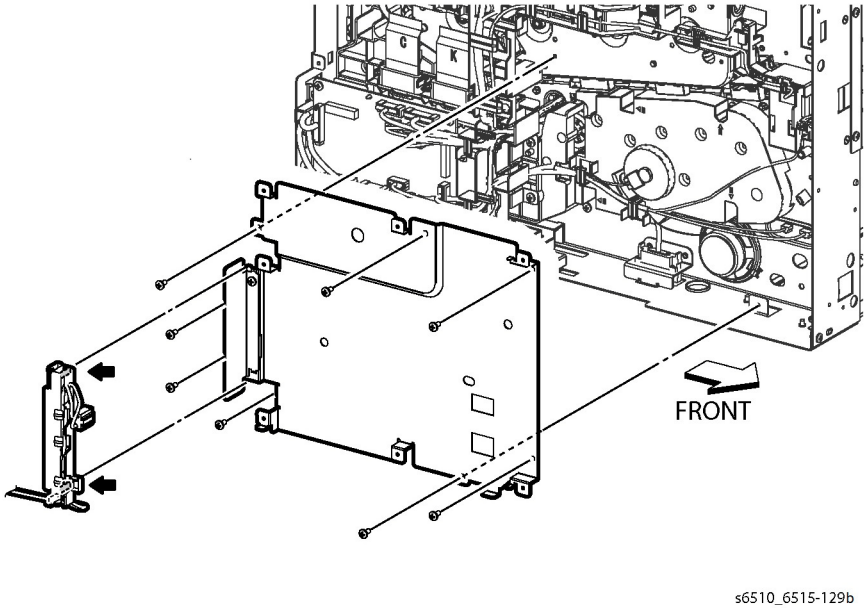

Figure 1 Remove the LVPS Plate

3. Refer to Figure 1 to remove the eight screws (silver, M3x6mm) attaching the LVPS Plate and remove the plate.

Replacement

CAUTION

Avoid damaging the harness wiring when replacing the LVPS Plate. Make sure that the harness wiring follows the factory-installed route.

REP 18.5.21 MCU Plate (SFP)

Parts List on PL 18.5 Item 21

Removal

WARNING

Switch off the electricity to the machine. Disconnect the power cord from the customer supply while performing tasks that do not need electricity. Electricity can cause death or injury. Moving parts can cause injury.

1. Remove the Left Side Cover, REP 19.4.1.
2. Remove the MCU Board, REP 18.5.1.
3. Refer to Figure 1 to release the cables from the MCU Harness Guide and remove the guide.

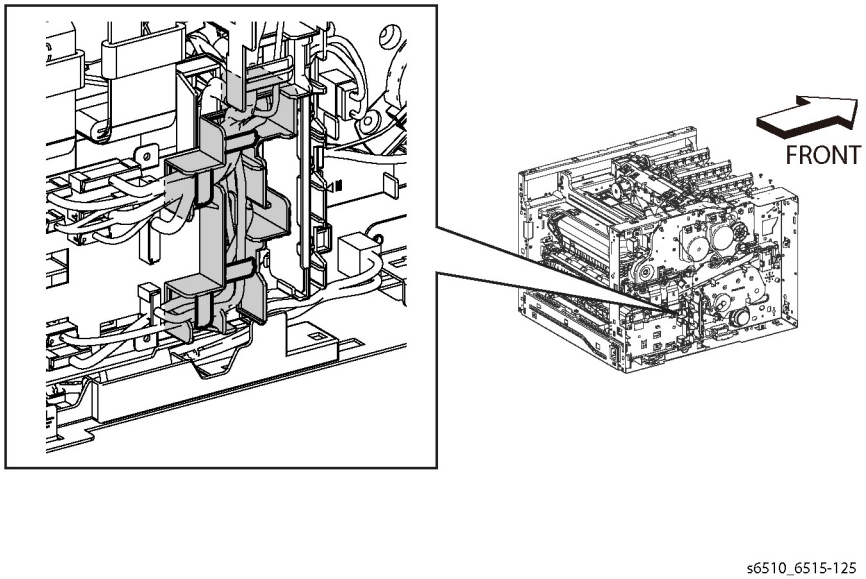

Figure 1 Release the Harnesses from the MCU Plate (SFP)

4. Refer to Figure 2 to remove the two screws (silver, M3x6mm) attaching the MCU Plate.

   To release the tabs at the right edge of the MCU Plate, remove screws from left edge of the LVPS Board and LVPS Plate as needed.

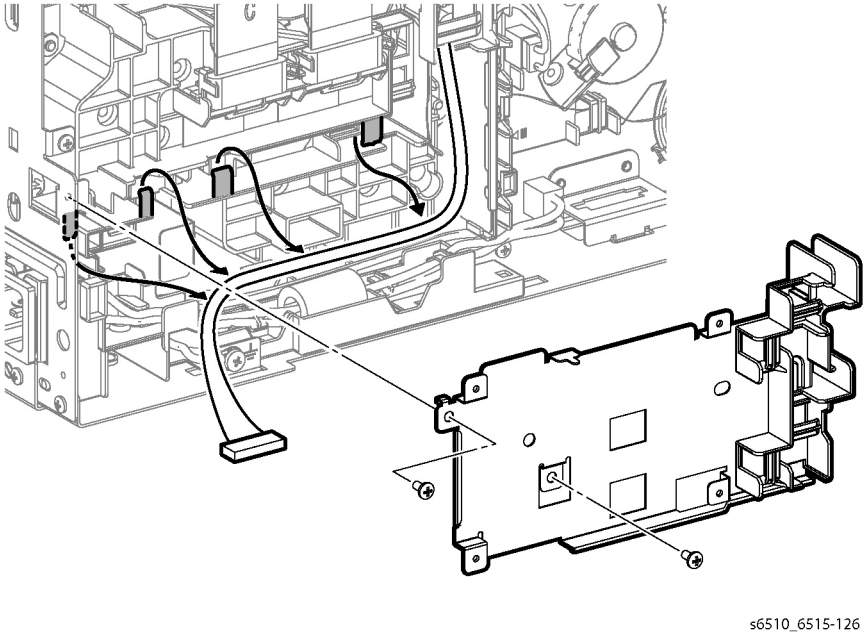

Figure 2 Remove the MCU Plate (SFP)

Replacement

When replacing the MCU Plate, place the tabs at the right edge of the plate under the tabs at the left edge of the LVPS Plate.

REP 18.6.1 HVPS Guide Assembly (SFP)

Parts List on PL 18.6 Item 1

Removal

WARNING

Switch off the electricity to the machine. Disconnect the power cord from the customer supply while performing tasks that do not need electricity. Electricity can cause death or injury. Moving parts can cause injury.

1. Remove the Right Side Cover, REP 19.3.97.
2. Remove the Left Side Cover, REP 19.4.1.
3. Remove the Drum Cartridges Y, M, C, K, REP 8.1.1.
4. Remove the Transfer Belt Unit, REP 6.1.1.
5. Remove the LPH Color Head Assembly, REP 2.1.1.
6. Remove the MCU Board, REP 18.5.1.
7. Remove the LPH Xerographic CRUM FFC, REP 2.1.99.
8. Refer to Figure 1 to remove the HVPS Toner Cover, REP 18.6.3.

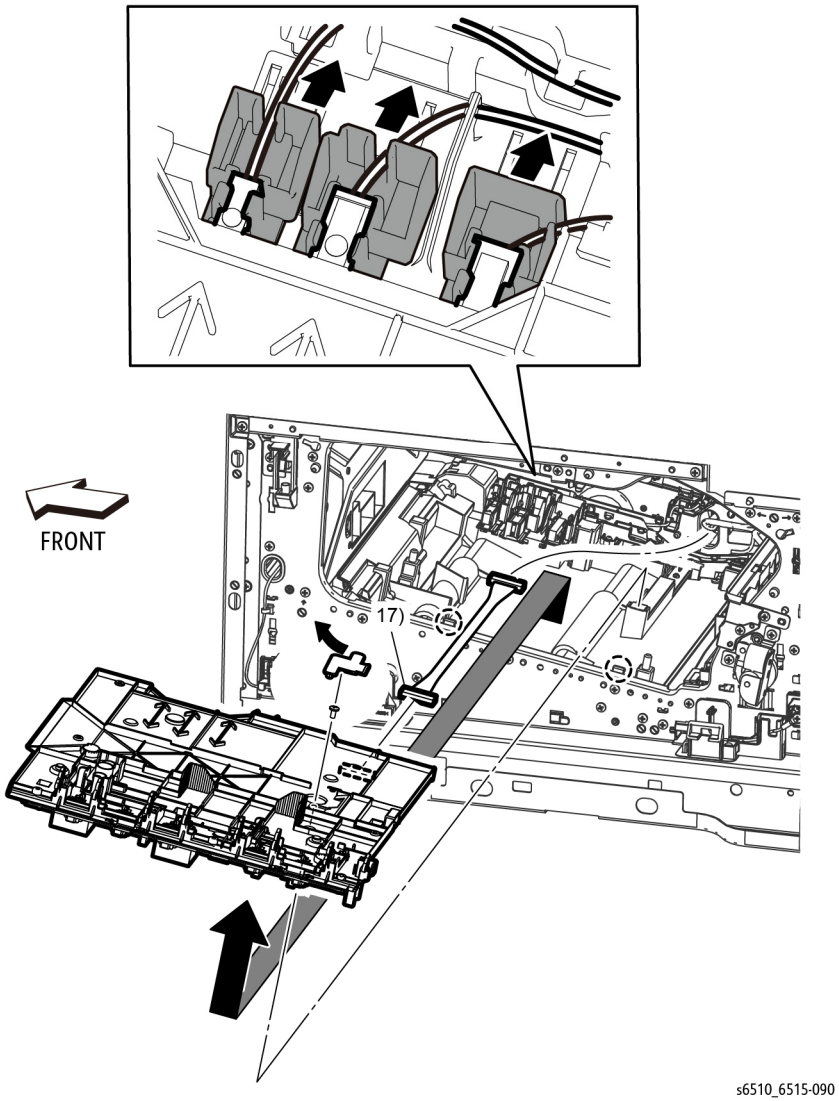

Figure 1 Remove the HVPS Guide Assembly (SFP)

NOTE: *In the following step, if your screw driver is longer than 6 inches, you must remove the Top Cover (REP 19.3.99).*

9. Refer to Figure 1 to remove the screw (silver, M3x6mm) located under the HVPS Toner Cover.
10. Refer to Figure 1 to push the faston plug holders in the direction of the arrows to disconnect the faston plugs from their terminals (P/J501, P/J502, T601).
11. Refer to Figure 1 to unplug the connector (P/J101) from the HVPS Guide Assembly.
12. Refer to Figure 1 to release the two hooks and remove the HVPS Guide Assembly in the direction of the arrow.

Replacement

To replace the HVPS Guide Assembly:

1. Connect the connector P/J101.
2. Place the HVPS Guide Assembly into its installed position making sure to insert the alignment tabs at the left edge of the board into their slots.
3. Slide the faston connector holders towards the board to reconnect the plugs.

   Make sure to attach the faston connectors (P/J501, P/J502, T601: K 1st Supply Harness Assembly, YMC 1st Supply Harness Assembly, and Trans Supply Harness Assembly) at the initial position as shown in Figure 2.

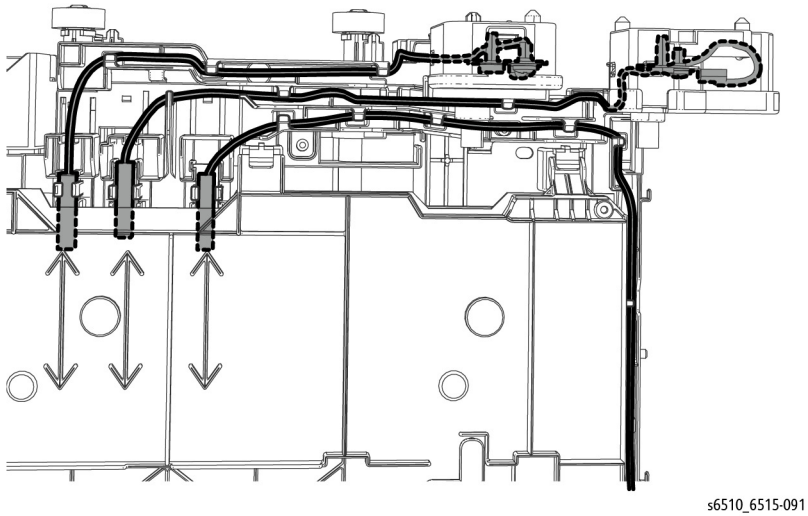

Figure 2 Re-attaching HVPS Guide Harnesses (SFP)

REP 18.6.3 HVPS Toner Cover (SFP)

Parts List on PL 18.6 Item 3

Removal

WARNING

Switch off the electricity to the machine. Disconnect the power cord from the customer supply while performing tasks that do not need electricity. Electricity can cause death or injury. Moving parts can cause injury.

1. Remove the Drum Cartridges Y, M, C, K, REP 8.1.1.
2. Refer to Figure 1 to remove the HVPS Toner Cover.

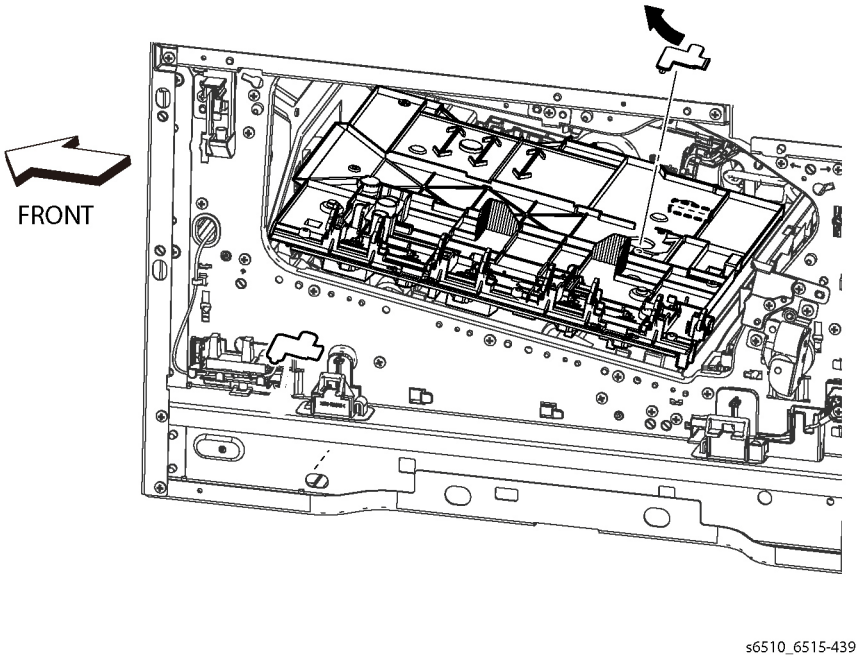

Figure 1 Remove the HVPS Toner Cover (SFP)

REP 18.6.99 Second Bias Transfer Roll Housing Kit (SFP)

Parts List on PL 18.6 Item 99

Removal

WARNING

Switch off the electricity to the machine. Disconnect the power cord from the customer supply while performing tasks that do not need electricity. Electricity can cause death or injury. Moving parts can cause injury.

1. Remove the Right Side Cover, REP 19.3.97.
2. Remove the Rear Cover, REP 19.4.99.
3. Refer to Figure 1 to remove the one screw (silver, M3x6mm) attaching the High Voltage Harness.

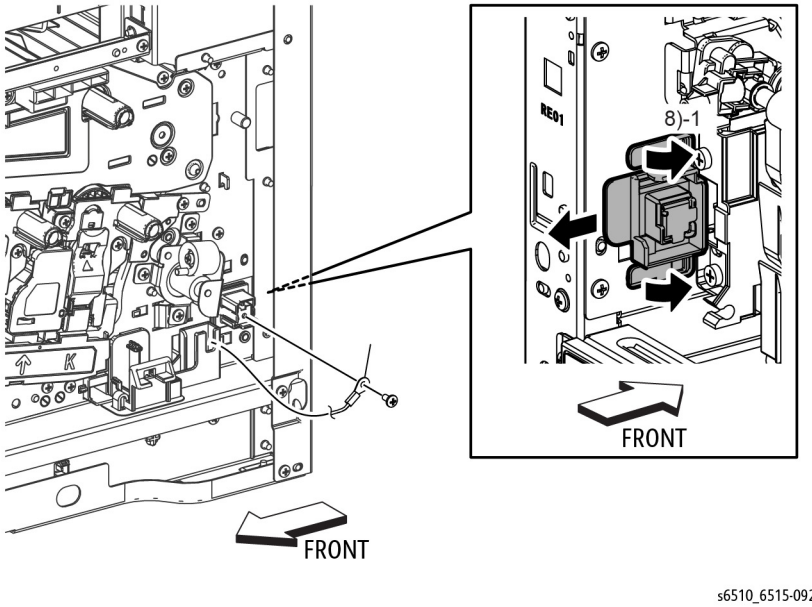

Figure 1 Remove the Second Bias Transfer Housing Kit (SFP)

4. Refer to Figure 1 to release two hooks on the Second Bias Transfer Housing and remove the housing.

REP 18.7.1 Inlet Harness Assembly Kit (SFP)

Parts List on PL 18.7 Item 1

Removal

WARNING

Switch off the electricity to the machine. Disconnect the power cord from the customer supply while performing tasks that do not need electricity. Electricity can cause death or injury. Moving parts can cause injury.

1. Remove the Left Side Cover, REP 19.4.1.
2. Remove the PH Drive Assembly, REP 3.1.2.
3. Refer to Figure 1 to release the AC Fuser Harness from the harness guide.
4. Refer to Figure 1 to remove the screw attaching the ground harness.

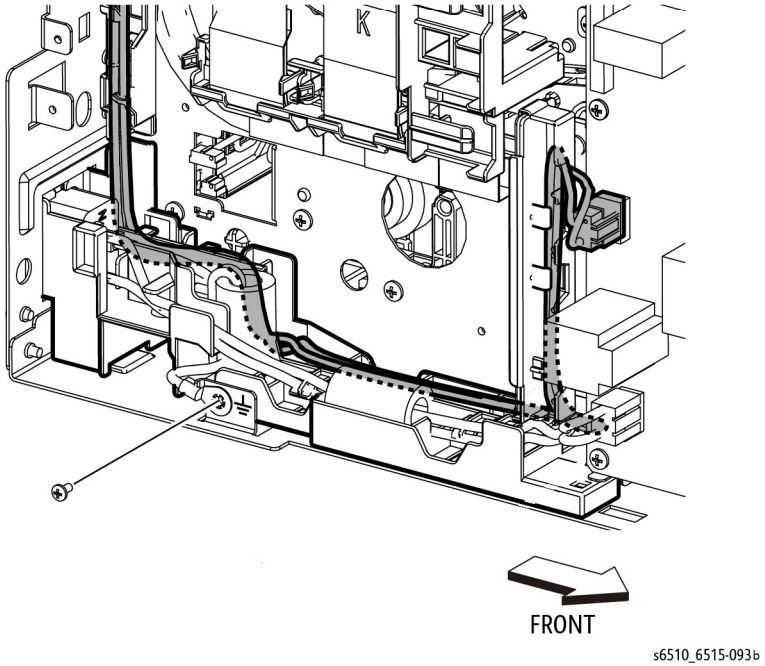

Figure 1 Release the AC Fuser and Ground Harnesses (SFP)

5. Refer to Figure 2 to unplug the Inlet Harness Assembly connector (P/J281).
6. Refer to Figure 2 to remove the screw attaching the Inlet Harness Assembly and remove the harness assembly.

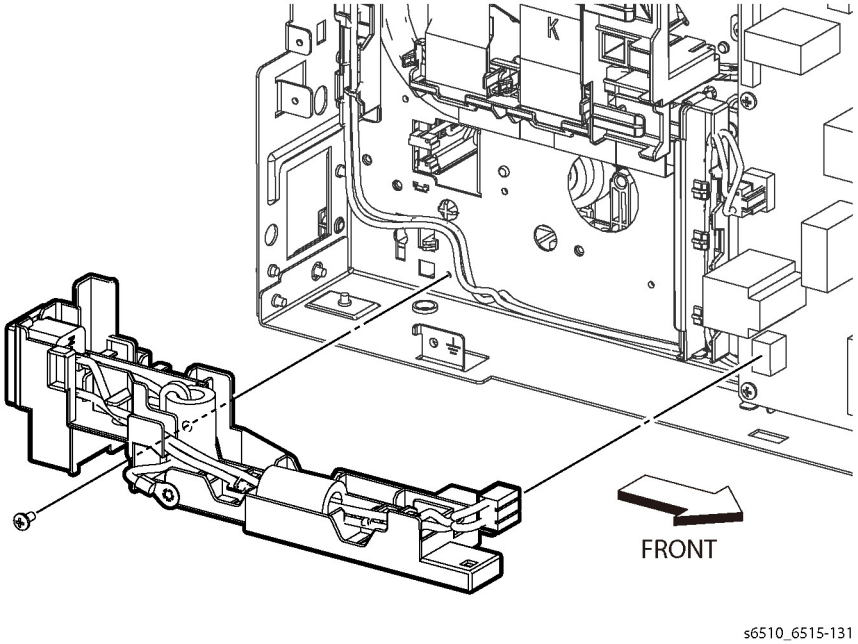

Figure 2 Remove the Inlet Harness Assembly (SFP)

Replacement

CAUTION

Make sure the Inlet Harness wiring is replaced following the factory-installed route.

REP 18.7.4 Rear Interlock Harness Assembly (SFP)

Parts List on PL 18.7 Item 4

Removal

WARNING

Switch off the electricity to the machine. Disconnect the power cord from the customer supply while performing tasks that do not need electricity. Electricity can cause death or injury. Moving parts can cause injury.

1. Remove the Left Side Cover, REP 19.4.1.
2. Remove the ESS Board, REP 18.5.5.
3. Remove the ESS Box, REP 18.5.19.
4. Refer to Figure 1 to unplug the connector (P/J292) from the LVPS Board and release the cable from the cable guide.

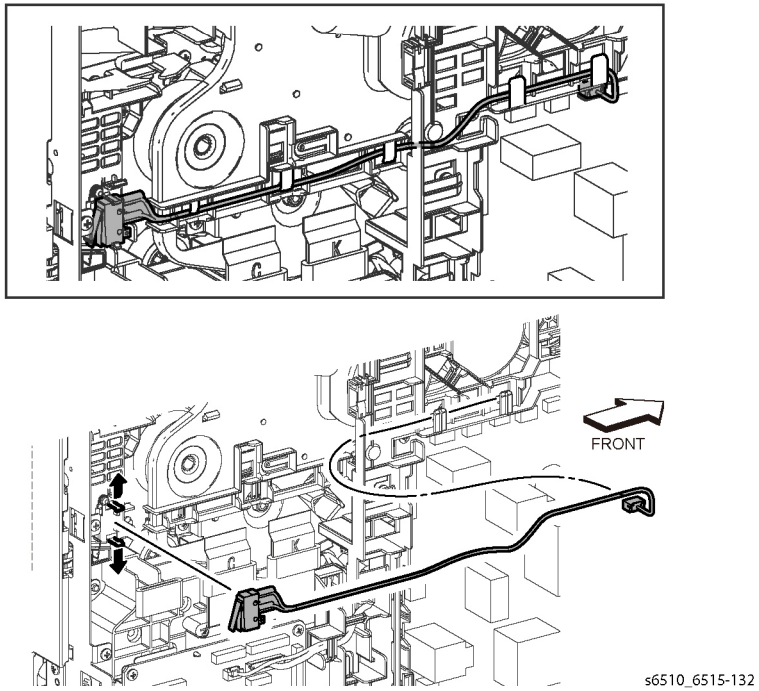

Figure 1 Remove the Rear Interlock Harness Assembly (SFP)

5. Refer to Figure 1 to release the two hooks and remove the Rear Interlock Harness Assembly.

REP 18.7.5 Side Interlock Harness Assembly (SFP)

Parts List on PL 18.7 Item 5

Removal

WARNING

Switch off the electricity to the machine. Disconnect the power cord from the customer supply while performing tasks that do not need electricity. Electricity can cause death or injury. Moving parts can cause injury.

1. Remove the Right Side Cover, REP 19.3.97.
2. Remove the Left Side Cover, REP 19.4.1.
3. Remove the Front Inner Cover, REP 19.3.5.

NOTE: *In the following steps, be sure to note the harness routing to avoid damaging wires during replacement.*

4. Remove the Main Fan, REP 4.1.1.
5. Remove the LVPS Board, REP 18.5.16.
6. Remove the LVPS Plate, REP 18.5.20.
7. Remove the Main Fan Duct, REP 4.1.2.
8. Refer to Figure 1 to release the harness of the Side Interlock Harness Assembly from the three hooks.

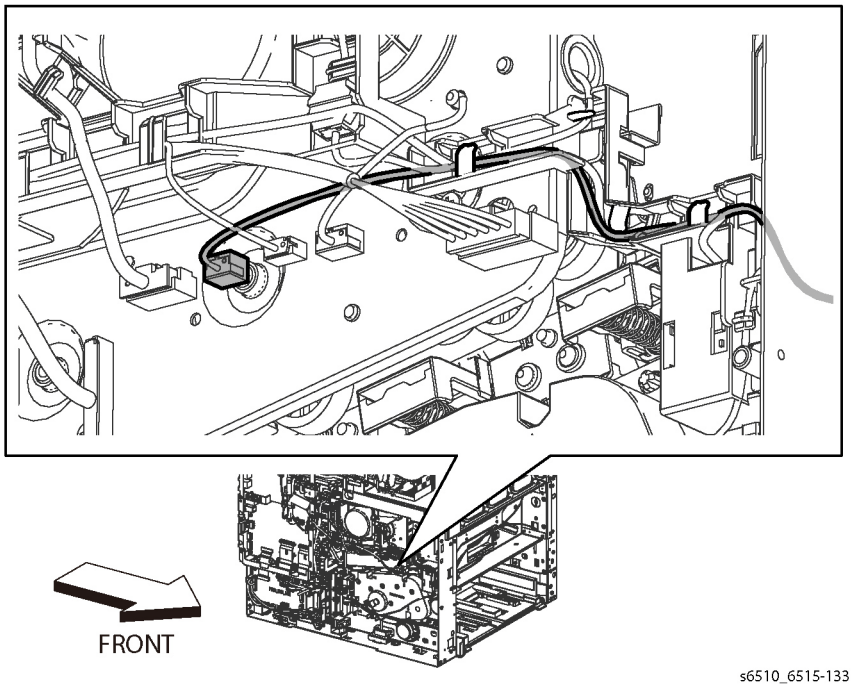

Figure 1 Release the Side Interlock Harness from the Hooks

9. Refer to Figure 2 to remove the screw (silver, M3x6mm) attaching the Side Interlock Harness Assembly and remove the harness.

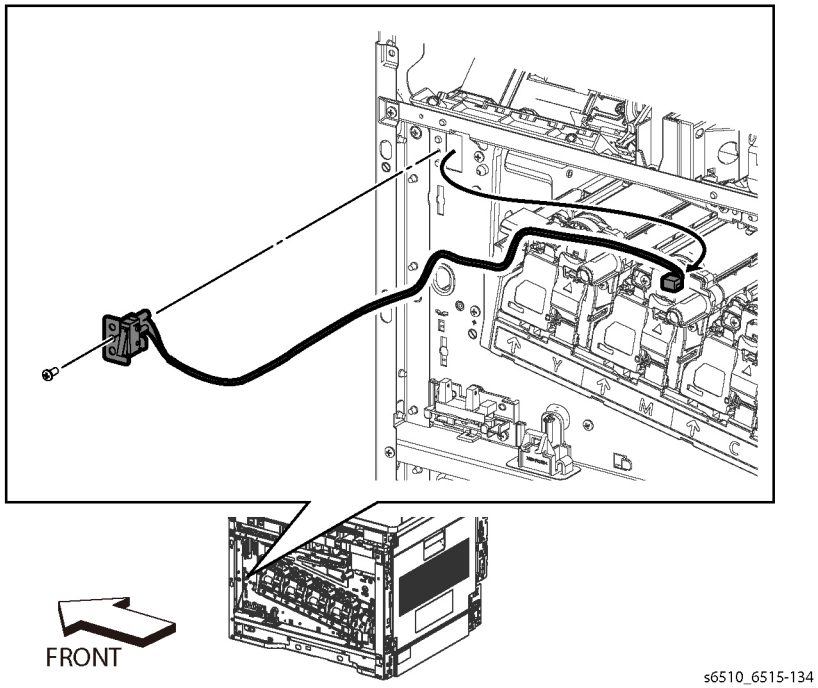

Figure 2 Remove the Side Interlock Harness Assembly (SFP)

Replacement

CAUTION

Avoid damaging wires during replacement. When replacing wire harnesses, use factory-installed routes.

REP 18.7.6 OPF Harness Assembly (SFP)

Parts List on PL 18.7 Item 6

Removal

WARNING

Switch off the electricity to the machine. Disconnect the power cord from the customer supply while performing tasks that do not need electricity. Electricity can cause death or injury. Moving parts can cause injury.

1. Remove the Left Side Cover, REP 19.4.1.

NOTE: *In the following steps, be sure to note the harness routing to avoid damaging wires during replacement.*

2. Remove the LVPS Board, REP 18.5.16.
3. Remove the LVPS Plate, REP 18.5.20.
4. Refer to Figure 1 to unplug the connector (P/J800) and release the harness portion of the OPF Harness Assembly from the four hooks of the harness guide.

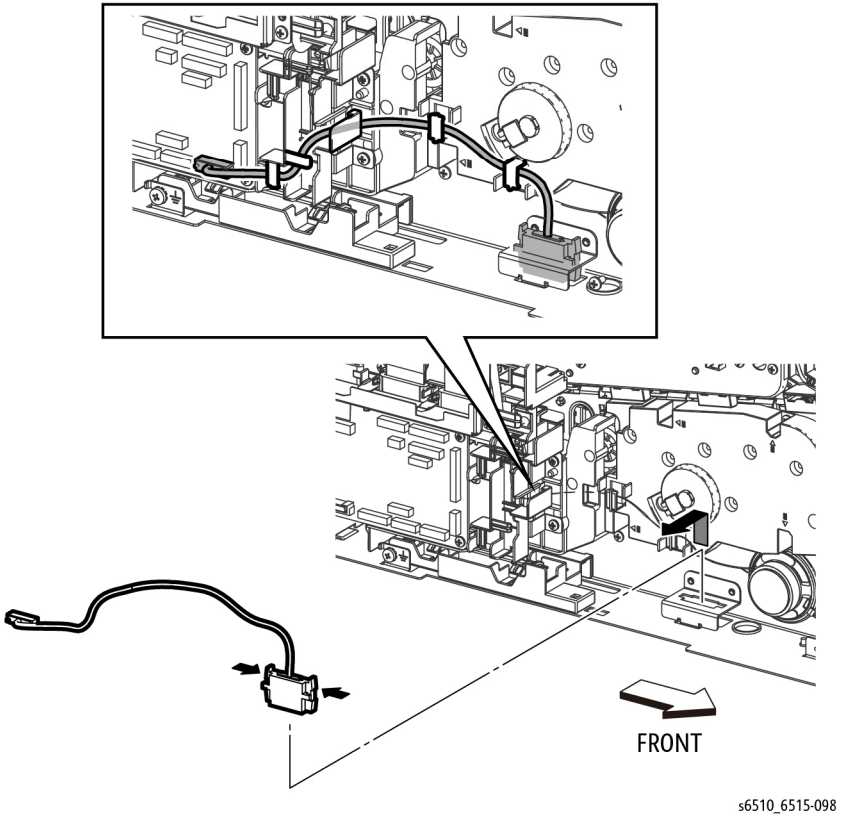

Figure 1 Remove the OPF Harness Assembly (SFP)

5. Refer to Figure 1 to push the two hooks on the OPF Harness Assembly and remove the OPF Harness Assembly.

Replacement

CAUTION

Avoid damaging wires during replacement. When replacing wire harnesses, use factory-installed routes.

REP 19.1.5 Front Inner Cover (MFP)

Parts List on PL 19.1 Item 5

Removal

WARNING

Switch off the electricity to the machine. Disconnect the power cord from the customer supply while performing tasks that do not need electricity. Electricity can cause death or injury. Moving parts can cause injury.

1. Remove the Left Side Cover, REP 19.2.1.
2. Remove the Right Side Cover, REP 19.1.97.
3. Refer to Figure 1 to remove the four screws (silver, M3x6mm) attaching the Front Inner Cover.

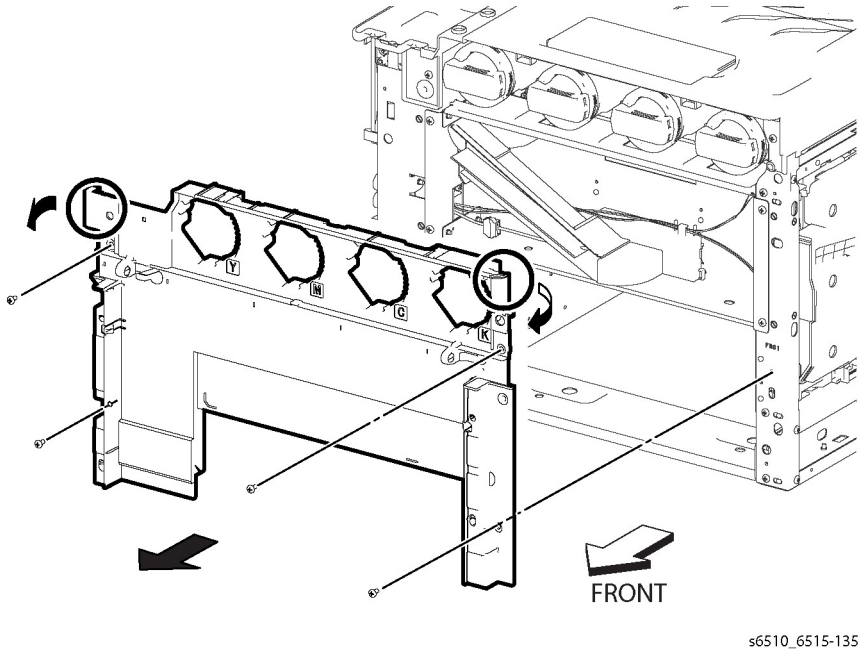

Figure 1 Remove the Front Inner Cover (MFP)

4. Release the hook along the top edge of the Front Inner Cover and remove the cover.

REP 19.1.22 Left Side Front Cover (MFP)

Parts List on PL 19.1 Item 22

Removal

WARNING

Switch off the electricity to the machine. Disconnect the power cord from the customer supply while performing tasks that do not need electricity. Electricity can cause death or injury. Moving parts can cause injury.

1. Remove the Toner Cover, REP 19.1.96.
2. Refer to Figure 1 to push and release the hook at the top end of the Left Side Front Cover.

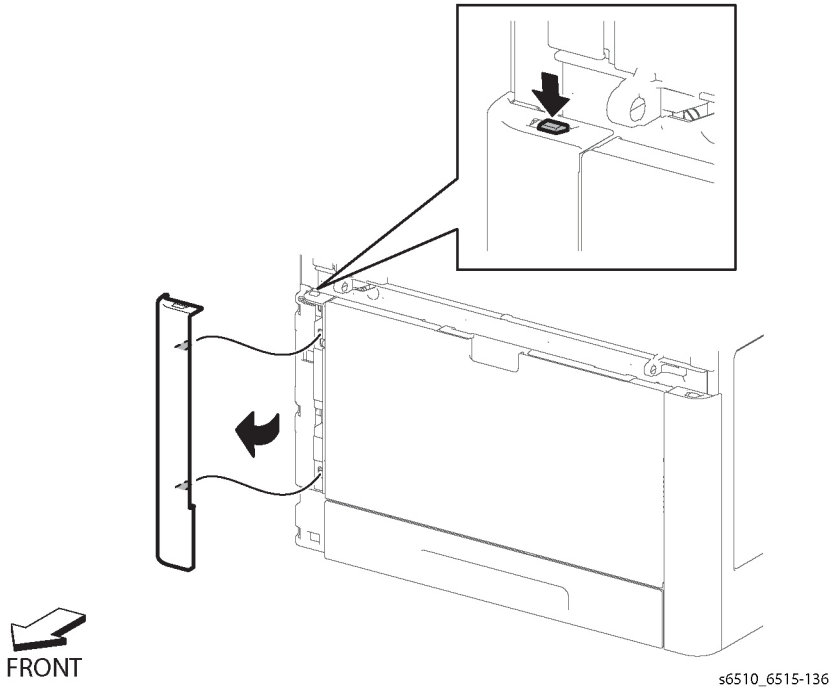

Figure 1 Remove the Left Side Front Cover (MFP)

3. Release the two bosses and remove the Left Side Front Cover.

REP 19.1.23 Right Side Front Cover (MFP)

Parts List on PL 19.1 Item 23

Removal

WARNING

Switch off the electricity to the machine. Disconnect the power cord from the customer supply while performing tasks that do not need electricity. Electricity can cause death or injury. Moving parts can cause injury.

1. Remove the Toner Cover, REP 19.1.96.
2. Refer to Figure 1 to push and release the hook at the top end of the Right Side Front Cover.

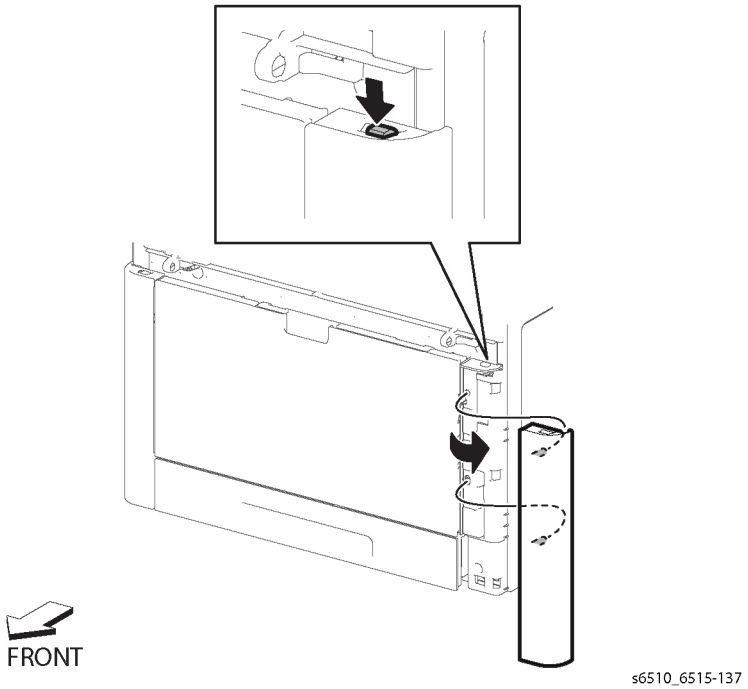

Figure 1 Remove the Right Side Front Cover (MFP)

3. Release the two bosses and remove the Right Side Front Cover.

REP 19.1.96 Toner Cover Assembly (MFP)

Parts List on PL 19.1 Item 96

Removal

WARNING

Switch off the electricity to the machine. Disconnect the power cord from the customer supply while performing tasks that do not need electricity. Electricity can cause death or injury. Moving parts can cause injury.

1. Open the Toner Cover Assembly.
2. Refer to Figure 1 to release the latch attaching the Toner Cover.

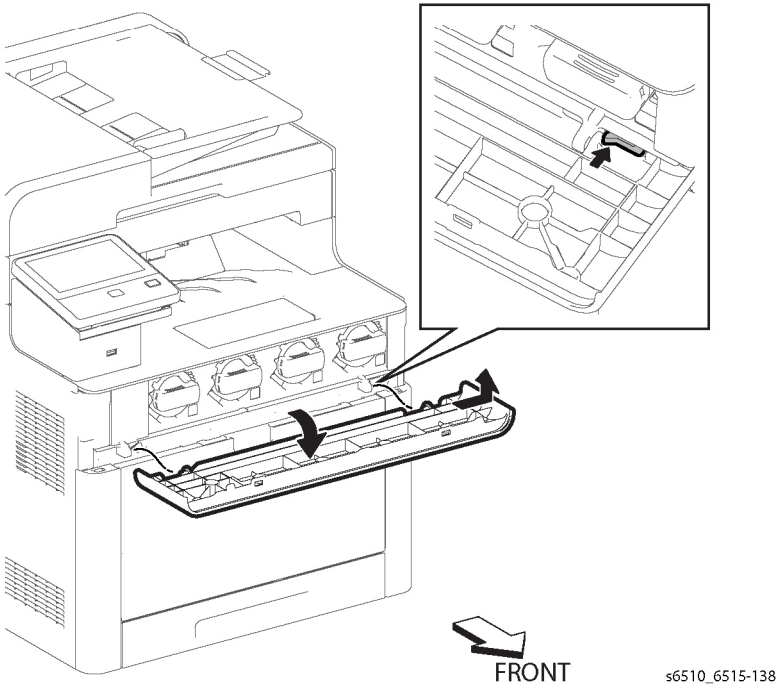

Figure 1 Remove the Toner Cover Assembly (MFP)

3. Remove the Toner Cover Assembly in the direction of the arrow.

REP 19.1.97 Right Side Cover Assembly (MFP)

Parts List on PL 19.1 Item 97

Removal

WARNING

Switch off the electricity to the machine. Disconnect the power cord from the customer supply while performing tasks that do not need electricity. Electricity can cause death or injury. Moving parts can cause injury.

1. Separate the printer from the Option Feeder Assembly, REP 10.1.1.
2. Remove the 250 Sheet Cassette.
3. Remove the Main Bypass Tray Assembly, REP 13.2.1.
4. Remove the Toner Cover Assembly, REP 19.1.96.
5. Remove the Right Side Front Cover, REP 19.1.23.
6. Open the Waste Cover.
7. Remove the Waste Cartridge, REP 8.1.5.
8. Open the Rear Cover.
9. Refer to Figure 1 to remove the five screws (silver, M3x6mm) attaching the Right Side Cover Assembly.

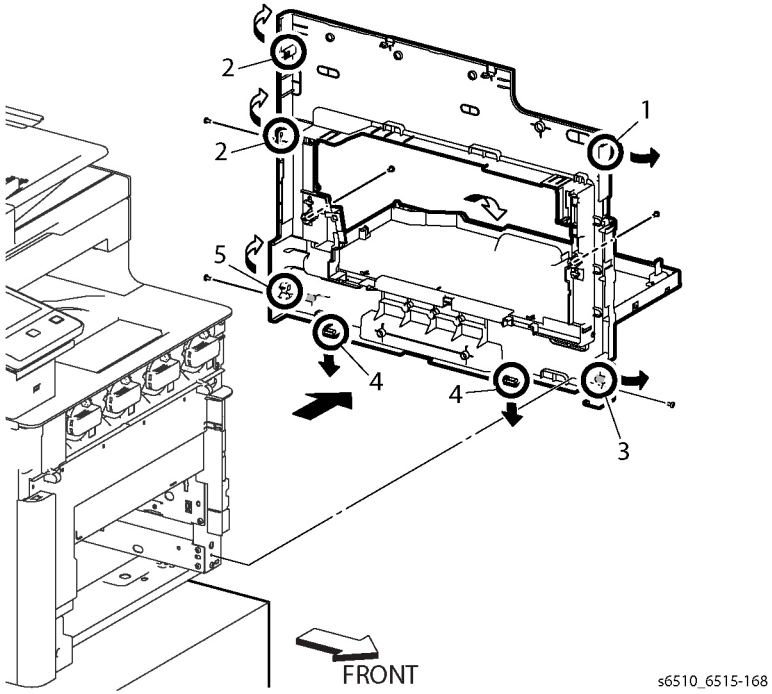

Figure 1 Remove the Right Side Cover Assembly (MFP)

CAUTION

To prevent the printer from falling off the workbench in the following step, position the printer to overhang the edge of the workbench as little as possible.

10. Position the right side of the printer to overhang the edge of the workbench.

NOTE: *In the following step, use a flat-blade tool, such as a screwdriver, to release the hooks under the bottom edge of the cover.*

11. Following the sequence shown in Figure 1, release the hooks and bosses of the Right Side Cover Assembly, and remove the cover.

NOTE: *If the Waste Link and Waste Link Spring fall off of the Right Side Cover, see Figure 2 to re-install the link and spring.*

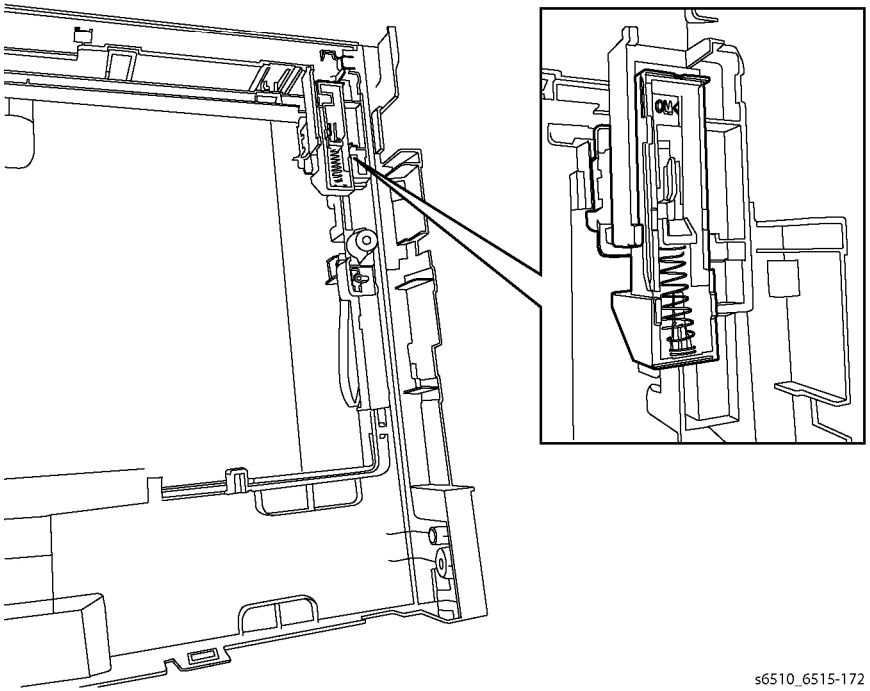

Figure 2 Re-install the Waste Link and Spring

REP 19.1.99 Top Cover Assembly (MFP)

Parts List on PL 19.1 Item 99

Removal

WARNING

Switch off the electricity to the machine. Disconnect the power cord from the customer supply while performing tasks that do not need electricity. Electricity can cause death or injury. Moving parts can cause injury.

1. Remove the 250 Sheet Cassette.
2. Remove the Main Bypass Tray Assembly.
3. Remove the Right Side Cover, REP 19.1.97.
4. Remove the Left Side Cover, REP 19.2.1.
5. Remove the Front Inner Cover, REP 19.1.5.
6. Remove the ESS Top Plate, REP 18.1.18.
7. Remove the Left Side IIT Cover, REP 19.2.4.
8. Remove the UI Console Assembly, REP 1.1.1.
9. Open the Rear Cover.
10. Remove the Scanner Assembly (DADF and IIT Assemblies together), REP 50.1.13.
11. Remove the Front USB Harness Assembly, REP 18.1.14.
12. Refer to Figure 1 to remove the five screws (silver, M3x6mm) attaching the Top Cover Assembly.

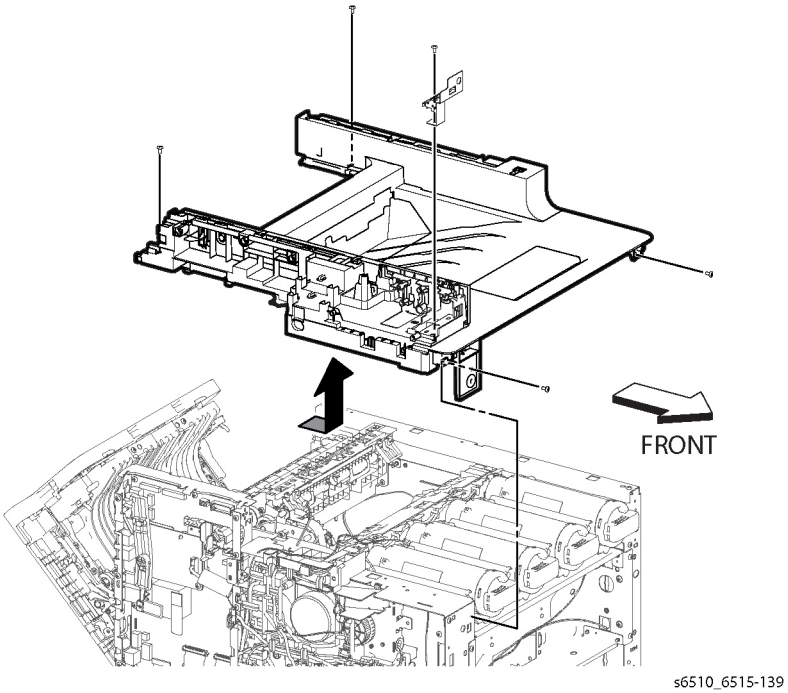

Figure 1 Remove the Top Cover Assembly (MFP)

13. Slide the Top Cover towards the front of the printer, then lift the cover up.

Replacement

When installing the Top Cover, be sure that the Exit Flapper extends out from the cover's paper exit.

REP 19.2.1 Left Side Cover (MFP)

Parts List on PL 19.2 Item 1

Removal

WARNING

Switch off the electricity to the machine. Disconnect the power cord from the customer supply while performing tasks that do not need electricity. Electricity can cause death or injury. Moving parts can cause injury.

1. Separate the printer from the Option Feeder Assembly, REP 10.1.1.
2. Remove the 250 Sheet Cassette.
3. Remove the Main Bypass Tray Assembly.
4. Remove the Toner Cover, REP 19.1.96.
5. Remove the ESS Window Assembly, REP 19.2.98.
6. Remove the WIFI Cap, REP 19.2.16, or the WIFI Module (if installed), REP 18.1.11.
7. Remove the Left Side Front Cover, REP 19.1.22.
8. Open the Rear Cover.
9. Refer to Figure 1 to remove the four screws (silver, M3x6mm) attaching the Left Side Cover.

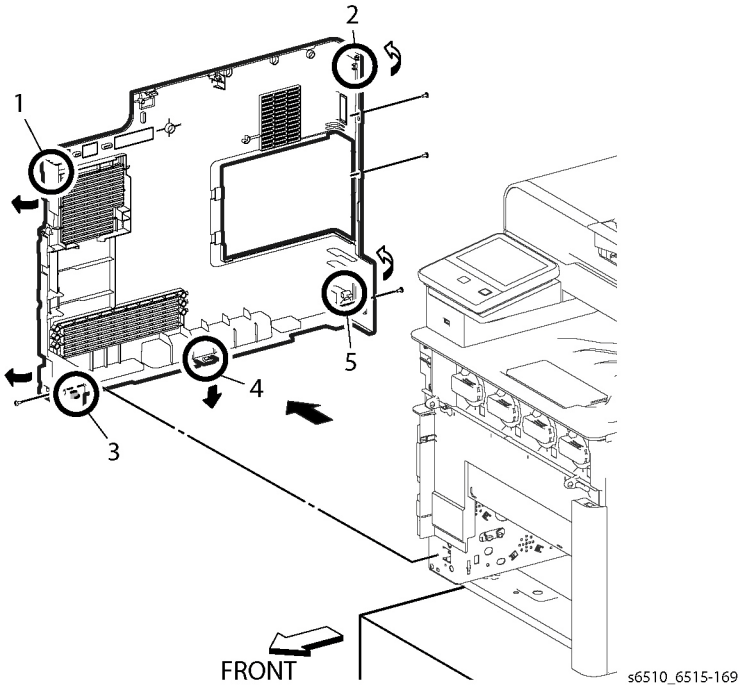

Figure 1 Remove the Left Side Cover (MFP)

CAUTION

To prevent the printer from falling off the workbench in the following step, position the printer to overhang the edge of the workbench as little as possible.

10. Position the left side of the printer to overhang the edge of the workbench.
11. Following the sequence shown in Figure 1, release the hooks and bosses of the Left Side Cover Assembly, and remove the cover.

REP 19.2.4 Left Side IIT Cover (MFP)

Parts List on PL 19.2 Item 4

Removal

WARNING

Switch off the electricity to the machine. Disconnect the power cord from the customer supply while performing tasks that do not need electricity. Electricity can cause death or injury. Moving parts can cause injury.

1. Remove the Left Side Cover, REP 19.2.1.
2. Refer to Figure 1 to slightly bend the Left Side IIT Cover in the direction of the arrow, and slide the cover to release the boss from the Bracket A.

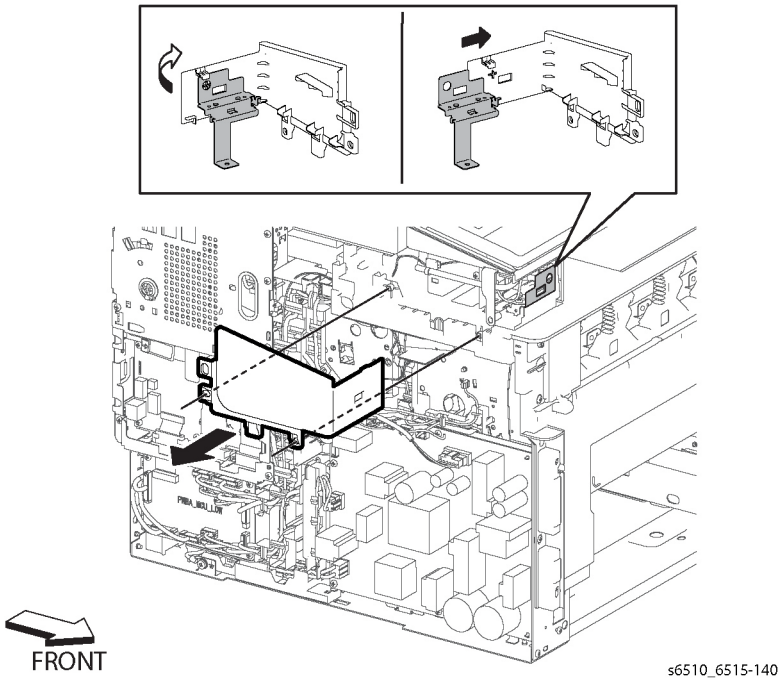

Figure 1 Remove the Left Side IIT Cover (MFP)

3. Refer to Figure 1 to remove the Left Side IIT Cover in the direction of the arrow.

REP 19.2.11 Second BiasTransfer Roller Assembly (MFP)

Parts List on PL 19.2 Item 11

Removal

WARNING

Switch off the electricity to the machine. Disconnect the power cord from the customer supply while performing tasks that do not need electricity. Electricity can cause death or injury. Moving parts can cause injury.

1. Open the Rear Cover.
2. Refer to Figure 1 to release the four latches attaching the Second Bias Transfer Roller and remove the roller assembly.

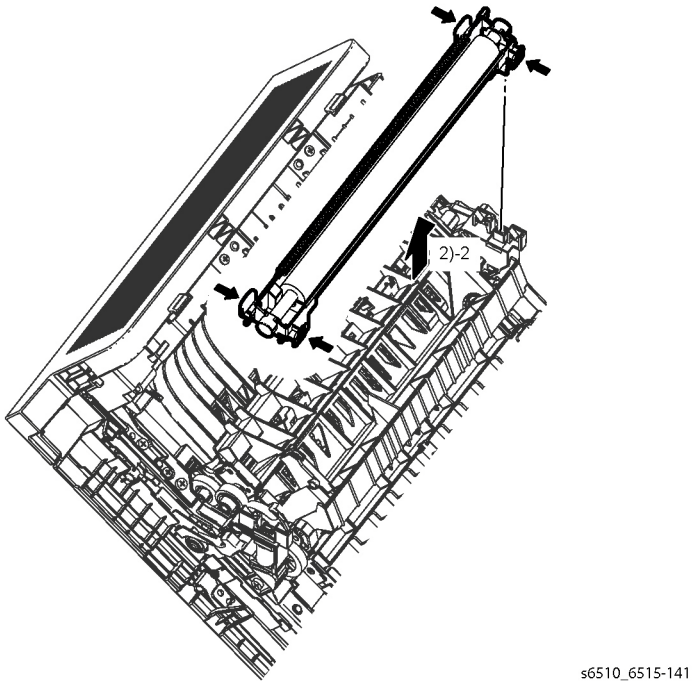

Figure 1 Remove the Second Bias Transfer Roller Assembly (MFP)

REP 19.2.16 WIFI Cap (MFP)

Parts List on PL 19.2 Item 16

Removal

1. Refer to Figure 1 to release the hook and remove the WIFI Cap.

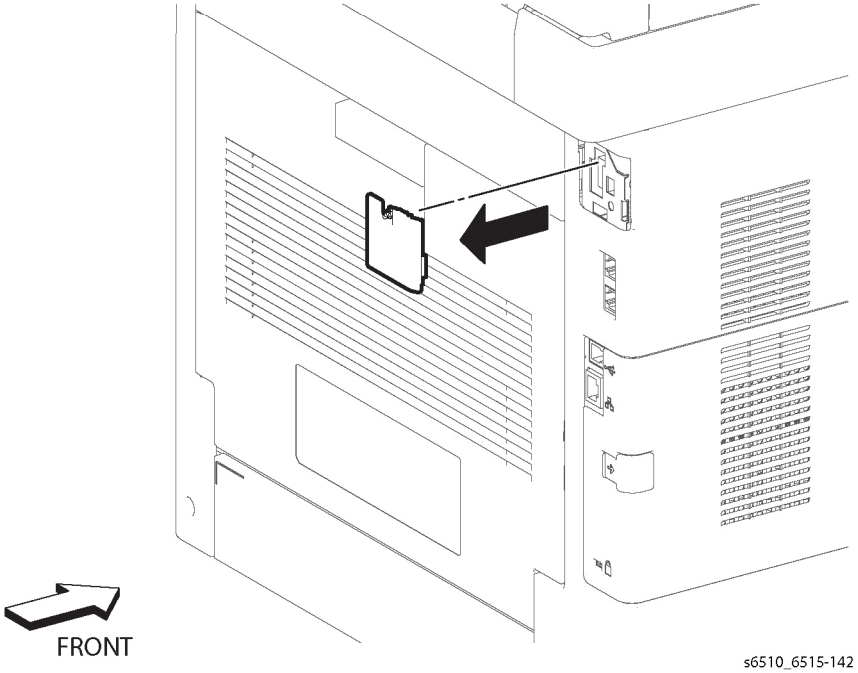

Figure 1 Remove the WIFI Cap (MFP)

REP 19.2.98 ESS Window Assembly Kit (MFP)

Parts List on PL 19.2 Item 98

Removal

WARNING

Switch off the electricity to the machine. Disconnect the power cord from the customer supply while performing tasks that do not need electricity. Electricity can cause death or injury. Moving parts can cause injury.

1. Refer to Figure 1 to release the lever in the direction of the arrow.

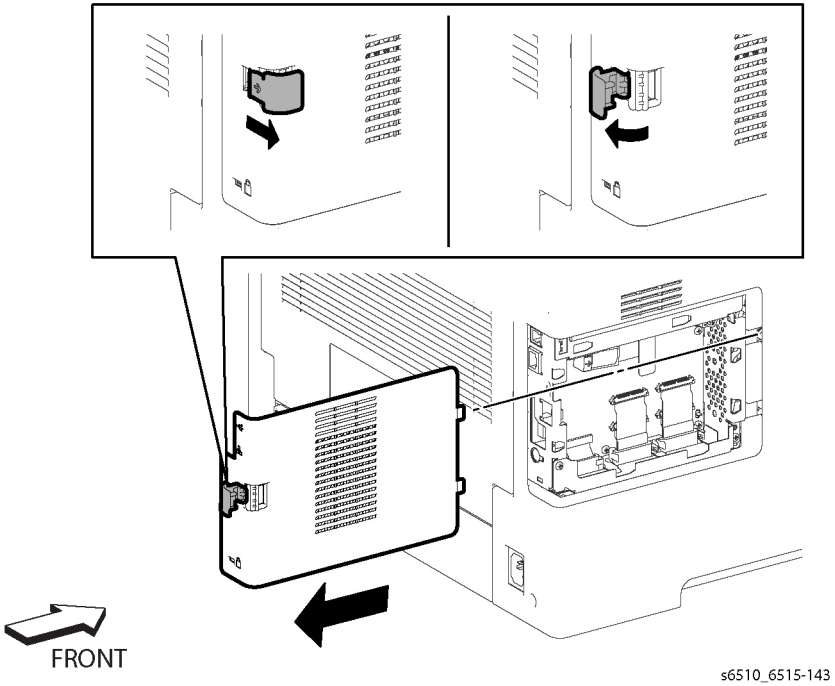

Figure 1 Remove the ESS Window Assembly (MFP)

2. Remove the ESS Window Assembly.

REP 19.2.99 Rear Cover Assembly Kit (MFP)

Parts List on PL 19.2 Item 99

Removal

WARNING

Switch off the electricity to the machine. Disconnect the power cord from the customer supply while performing tasks that do not need electricity. Electricity can cause death or injury. Moving parts can cause injury.

1. Remove the Right Side Cover, REP 19.1.97.
2. Open the Rear Cover.

CAUTION

In the following step, to prevent the cover from dropping down as you remove the straps, support the cover from underneath.

3. Refer to Figure 1 to remove the ends of the two Rear Cover Straps from the Rear Cover.

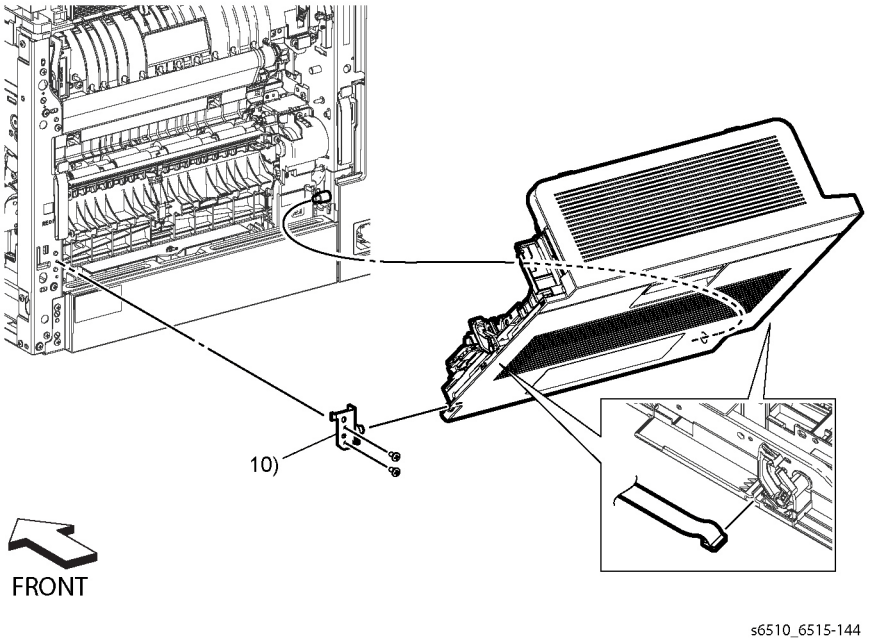

Figure 1 Remove the Rear Cover Assembly (MFP)

4. Close the Rear Cover.

CAUTION

In the following steps, to prevent the cover from falling off as you remove the hinge screw, support the cover from underneath.

5. Refer to Figure 1 to remove the two screws (silver, M3x6mm) attaching the Right Rear Hinge.

6. Remove the Right Rear Hinge and the Rear Cover Assembly from the printer while opening the cover.

REP 19.3.5 Front Inner Cover (SFP)

Parts List on PL 19.3 Item 5

Removal

WARNING

Switch off the electricity to the machine. Disconnect the power cord from the customer supply while performing tasks that do not need electricity. Electricity can cause death or injury. Moving parts can cause injury.

1. Remove the Left Side Cover, REP 19.4.1.
2. Remove the Right Side Cover, REP 19.3.97.
3. Lift the front edge of the UI Console to provide clearance for the Front Inner Cover.
4. Refer to Figure 1 to remove the four screws (silver, M3x6mm) attaching the Front Inner Cover.

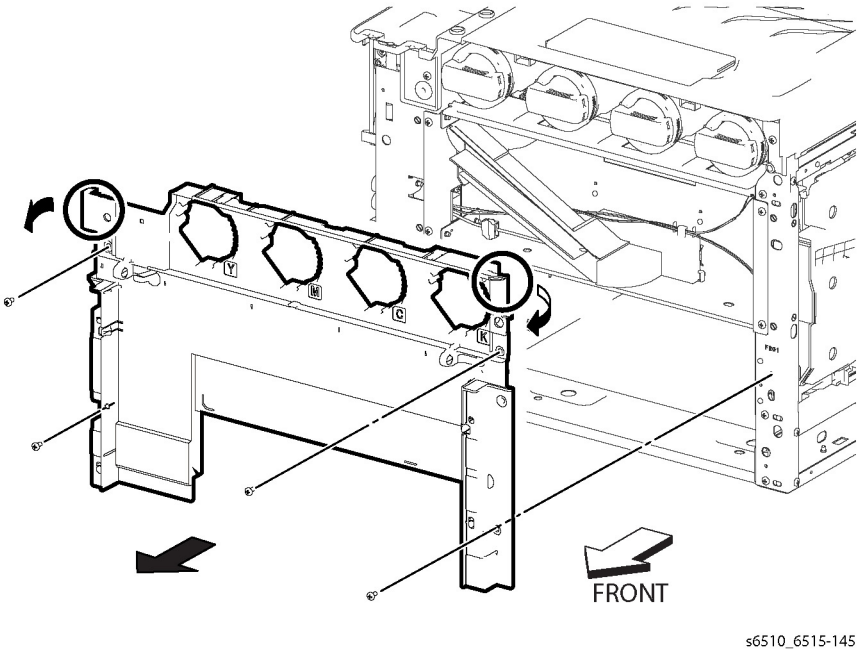

Figure 1 Remove the Front Inner Cover (SFP)

5. Release the hook along the top edge of the Front Inner Cover and remove the cover.

REP 19.3.22 Left Side Front Cover (SFP)

Parts List on PL 19.3 Item 22

Removal

WARNING

Switch off the electricity to the machine. Disconnect the power cord from the customer supply while performing tasks that do not need electricity. Electricity can cause death or injury. Moving parts can cause injury.

1. Remove the Toner Cover, REP 19.3.96.
2. Refer to Figure 1 to push and release the hook at the top end of the Left Side Front Cover.

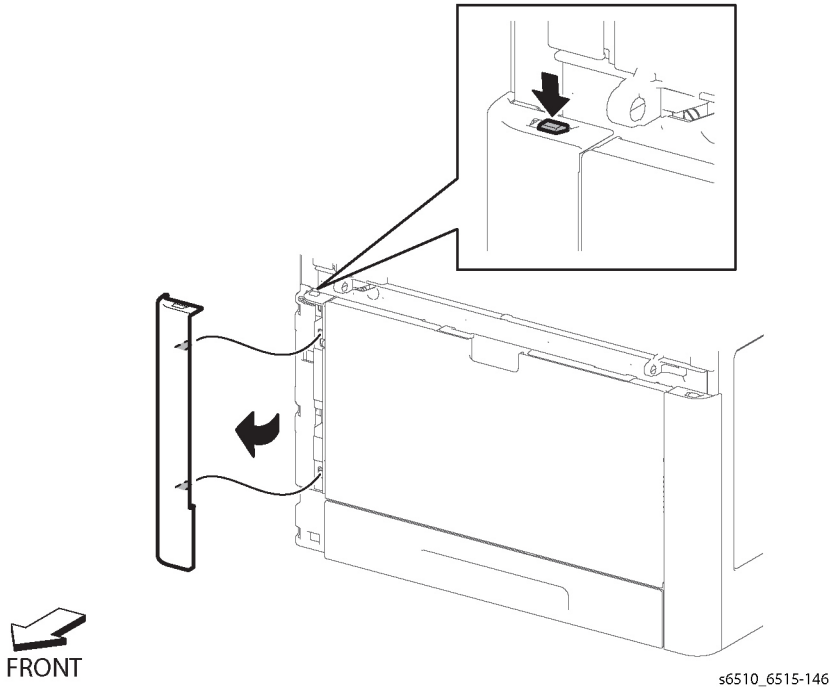

Figure 1 Remove the Left Side Front Cover (SFP)

3. Release the two bosses and remove the Left Side Front Cover.

REP 19.3.23 Right Side Front Cover (SFP)

Parts List on PL 19.3 Item 23

Removal

WARNING

Switch off the electricity to the machine. Disconnect the power cord from the customer supply while performing tasks that do not need electricity. Electricity can cause death or injury. Moving parts can cause injury.

1. Remove the Toner Cover, REP 19.3.96.
2. Refer to Figure 1 to push and release the hook at the top end of the Right Side Front Cover.

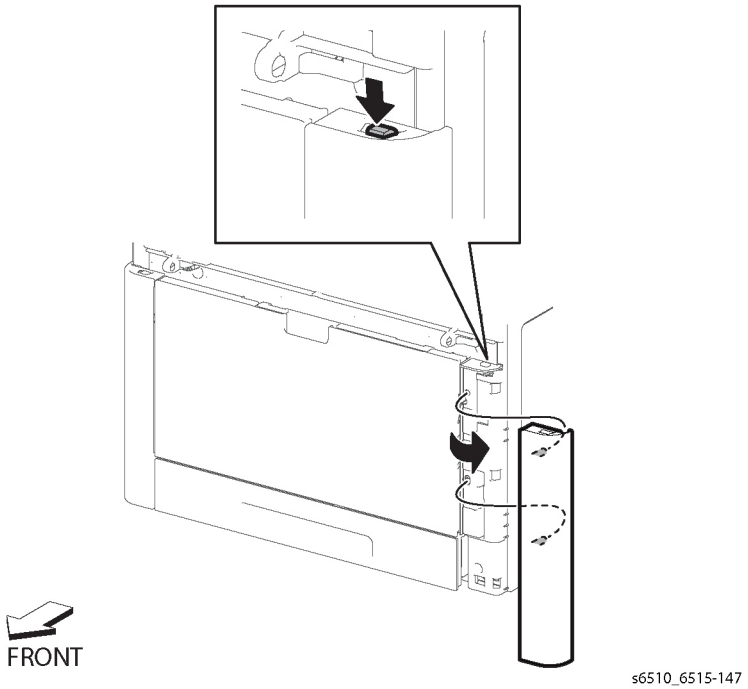

Figure 1 Remove the Right Side Front cover (SFP)

3. Release the two bosses and remove the Right Side Front Cover.

REP 19.3.24 Left Rear Top Cover (SFP)

Parts List on PL 19.3 Item 24

Removal

WARNING

Switch off the electricity to the machine. Disconnect the power cord from the customer supply while performing tasks that do not need electricity. Electricity can cause death or injury. Moving parts can cause injury.

1. Remove the Wireless Module, REP 18.5.11, or the WIFI Cap, REP 19.4.16.
2. Open the Rear Cover.
3. Remove only the top two screws from the rear of the Left Side Cover, and release the boss at the corner of the cover. (Do not remove the cover.)
4. Refer to Figure 1 to release the boss at point A, the top rear corner of the Left Rear Top Cover, to loosen the corner from the printer chassis.

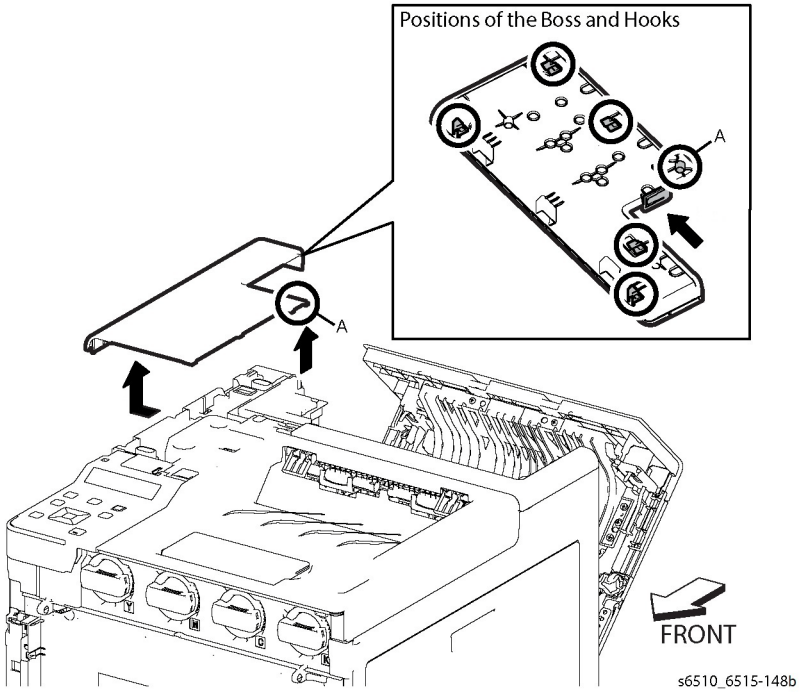

Figure 1 Remove the Left Rear Top Cover (SFP)

5. Refer to Figure 1 to release Latch A and slide the cover in the direction of the arrow to release the other bosses on the Left Rear Top Cover.
6. Continue to move the cover in the direction of the arrow and remove the cover.

REP 19.3.25 Right Rear Top Cover (SFP)

Parts List on PL 19.3 Item 25

Removal

WARNING

Switch off the electricity to the machine. Disconnect the power cord from the customer supply while performing tasks that do not need electricity. Electricity can cause death or injury. Moving parts can cause injury.

1. Remove the Right Side Cover, REP 19.3.97.
2. Open the Rear Cover.
3. Remove the Left Rear Top Cover, REP 19.3.24.
4. Refer to Figure 1 to release the hooks and slide the Right Rear Top Cover in the direction of the arrow.

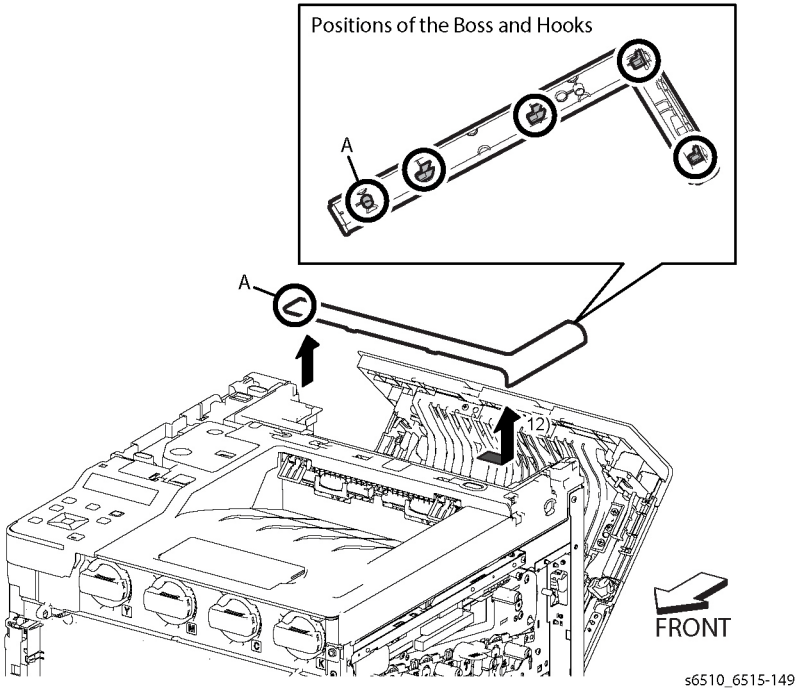

Figure 1 Remove the Right Rear Top Cover (SFP)

REP 19.3.96 Toner Cover Assembly (SFP)

Parts List on PL 19.3 Item 96

Removal

WARNING

Switch off the electricity to the machine. Disconnect the power cord from the customer supply while performing tasks that do not need electricity. Electricity can cause death or injury. Moving parts can cause injury.

1. Open the Toner Cover Assembly.
2. Refer to the detail in Figure 1 to release the latch attaching the Toner Cover.

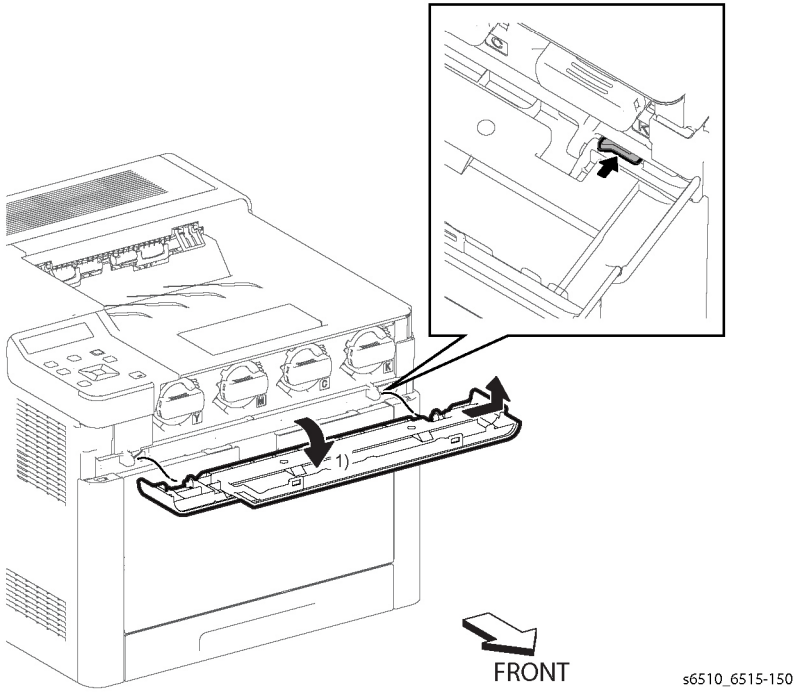

Figure 1 Remove the Toner Cover Assembly (SFP)

3. Remove the Toner Cover Assembly in the direction of the arrow.

REP 19.3.97 Right Side Cover Assembly (SFP)

Parts List on PL 19.3 Item 97

Removal

WARNING

Switch off the electricity to the machine. Disconnect the power cord from the customer supply while performing tasks that do not need electricity. Electricity can cause death or injury. Moving parts can cause injury.

1. Separate the printer from the Option Feeder Assembly, REP 10.1.1.
2. Remove the 250 Sheet Cassette.
3. Remove the Main Bypass Tray Assembly, REP 13.2.1.
4. Remove the Toner Cover Assembly, REP 19.3.96.
5. Remove the Right Side Front Cover, REP 19.3.23.
6. Open the Waste Cover.
7. Remove the Waste Cartridge, REP 8.1.5.
8. Open the Rear Cover.
9. Refer to Figure 1 to remove the five screws (silver, M3x6mm) attaching the Right Side Cover Assembly.

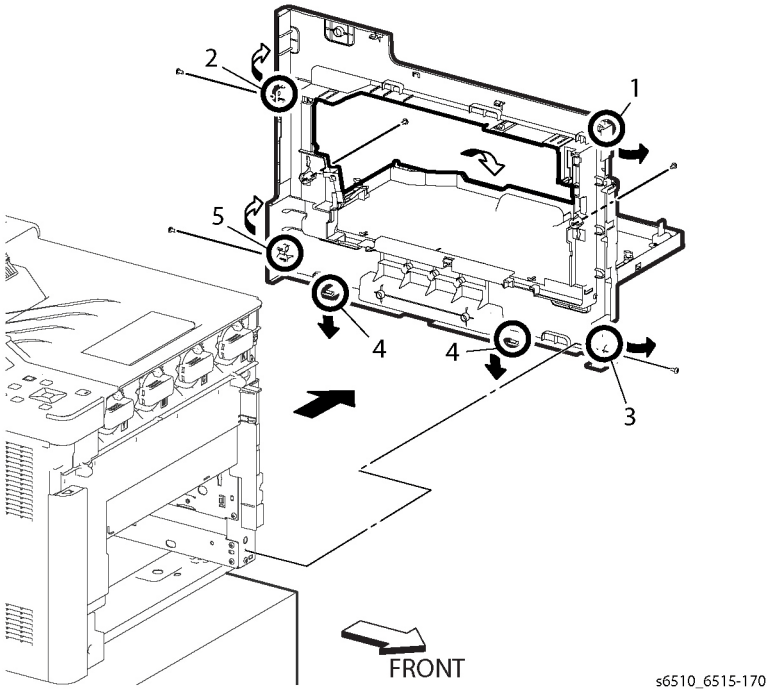

Figure 1 Remove the Right Side Cover Assembly (SFP)

CAUTION

To prevent the printer from falling off the workbench in the following step, position the printer to overhang the edge of the workbench as little as possible.

10. Position the right side of the printer to overhang the edge of the workbench.
11. Following the sequence shown in Figure 1, release the hooks and bosses of the Right Side Cover Assembly, and remove the cover.

NOTE: *If the Waste Link and Waste Link Spring fall off of the Right Side Cover, see Figure 2 to re-install the link and spring.*

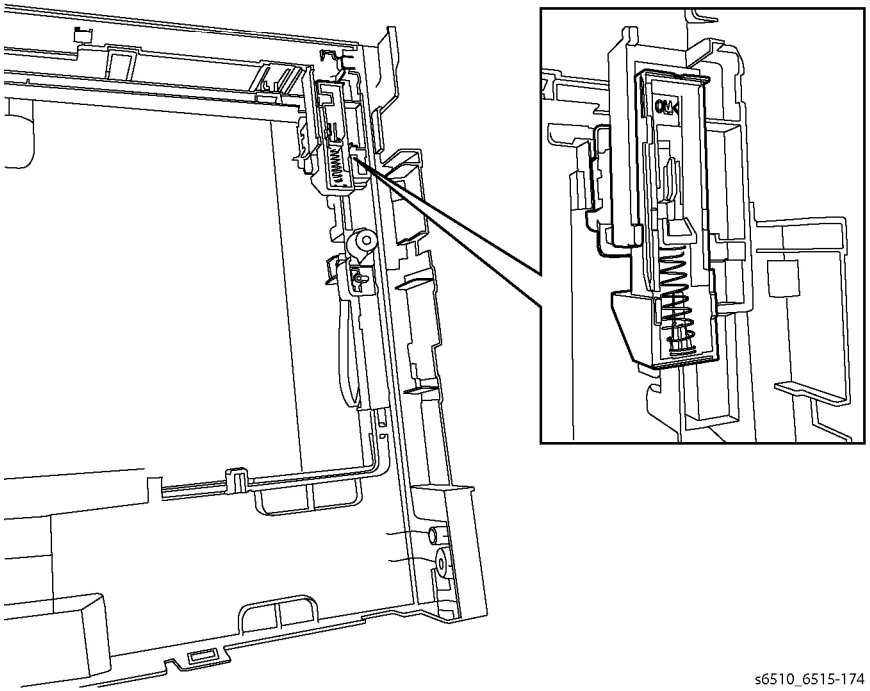

Figure 2 Re-install the Waste Link and Spring

REP 19.3.99 Top Cover Assembly (SFP)

Parts List on PL 19.3 Item 99

Removal

WARNING

Switch off the electricity to the machine. Disconnect the power cord from the customer supply while performing tasks that do not need electricity. Electricity can cause death or injury. Moving parts can cause injury.

1. Remove the 250 Sheet Cassette.
2. Remove the Main Bypass Tray Assembly.
3. Remove the Right Side Cover, REP 19.3.97.
4. Remove the Left Side Cover, REP 19.4.1.
5. Remove the Front Inner Cover, REP 19.3.5.
6. Remove the Left Rear Top Cover, REP 19.3.24.
7. Remove the Right Rear Top Cover, REP 19.3.25.
8. Open the Rear Cover.
9. Remove the UI Console, REP 1.2.1.
10. Refer to Figure 1 to remove the three screws (silver, M3x6mm) attaching the Top Cover Assembly, then lift up the cover.

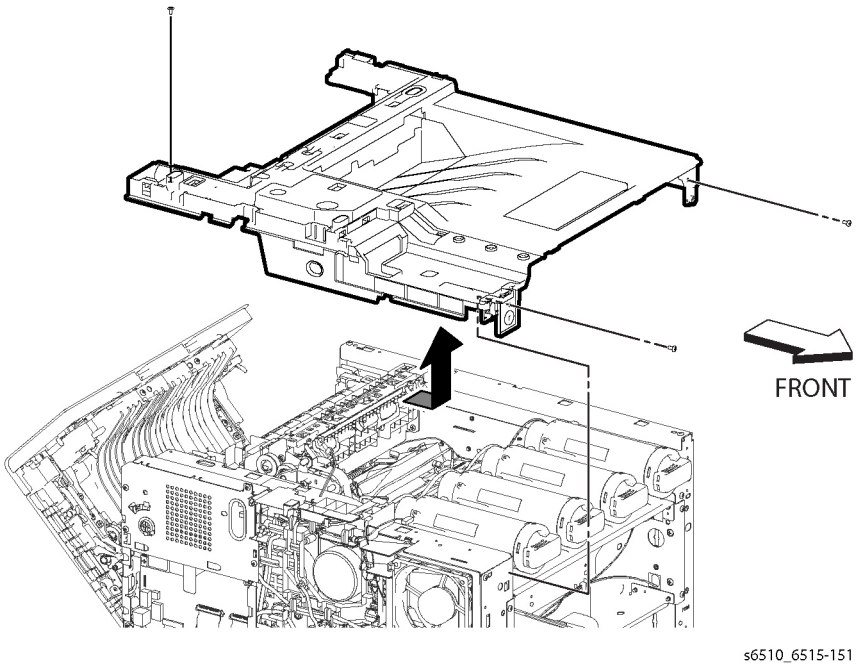

Figure 1 Remove the Top Cover Assembly (SFP)

Replacement

CAUTION

Avoid pinching the UI Harness between the Top Cover and the printer frame when installing the Top Cover.

NOTE: *When installing the Top Cover Assembly, ensure that the Exit Flapper extends out from the Top Cover's paper exit slots.*

REP 19.4.1 Left Side Cover (SFP)

Parts List on PL 19.4 Item 1

Removal

WARNING

Switch off the electricity to the machine. Disconnect the power cord from the customer supply while performing tasks that do not need electricity. Electricity can cause death or injury. Moving parts can cause injury.

1. Separate the printer from the Option Feeder Assembly, REP 10.1.1.
2. Remove the 250 Sheet Cassette.
3. Remove the Main Bypass Tray Assembly.
4. Remove the Toner Cover, REP 19.3.96.
5. Remove the ESS Window Assembly, REP 19.4.98.
6. Remove the WIFI Cap, REP 19.4.16, or the WIFI Module (if installed), REP 18.5.11.
7. Remove the Left Side Front Cover, REP 19.3.22.
8. Open the Rear Cover.
9. Refer to Figure 1 to remove the four screws (silver, M3x6mm) attaching the Left Side Cover.

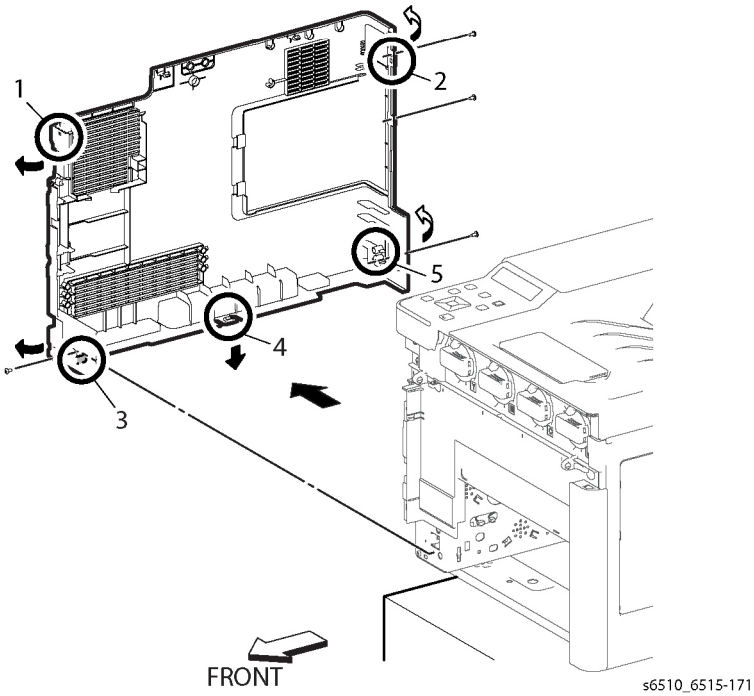

Figure 1 Remove the Left Side Cover (SFP)

CAUTION

To prevent the printer from falling off the workbench in the following step, position the printer to overhang the edge of the workbench as little as possible.

10. Position the left side of the printer to overhang the edge of the workbench.
11. Following the sequence shown in Figure 1, release the hooks and bosses of the Left Side Cover Assembly, and remove the cover.

REP 19.4.11 Second Bias Transfer Roller Assembly (SFP)

Parts List on PL 19.4 Item 11

Removal

WARNING

Switch off the electricity to the machine. Disconnect the power cord from the customer supply while performing tasks that do not need electricity. Electricity can cause death or injury. Moving parts can cause injury.

1. Open the Rear Cover.
2. Refer to Figure 1 to release the four latches attaching the Second Bias Transfer Roller and remove the roller assembly.

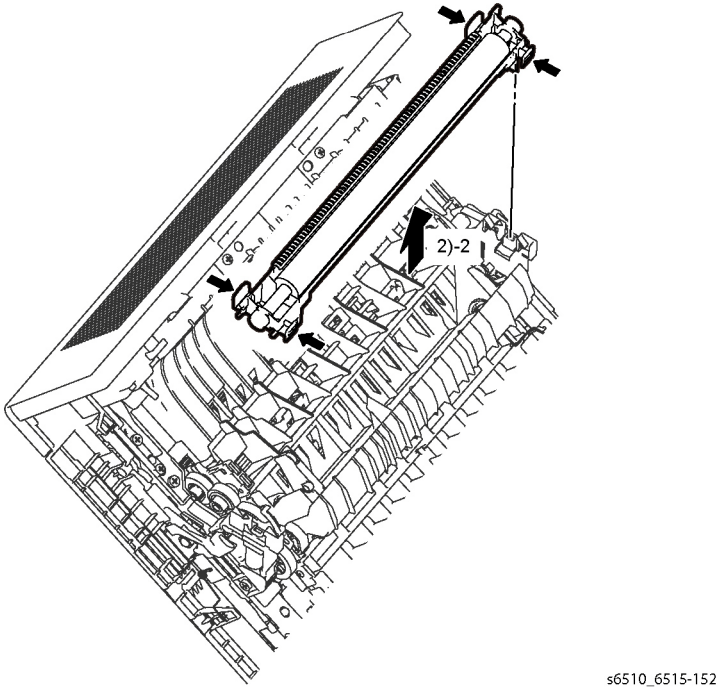

Figure 1 Remove the Second Bias Transfer Roller Assembly (SFP)

REP 19.4.16 WIFI Cap (SFP)

Parts List on PL 19.4 Item 16

Removal

1. Refer to Figure 1 to release the hook and remove the WIFI Cap.

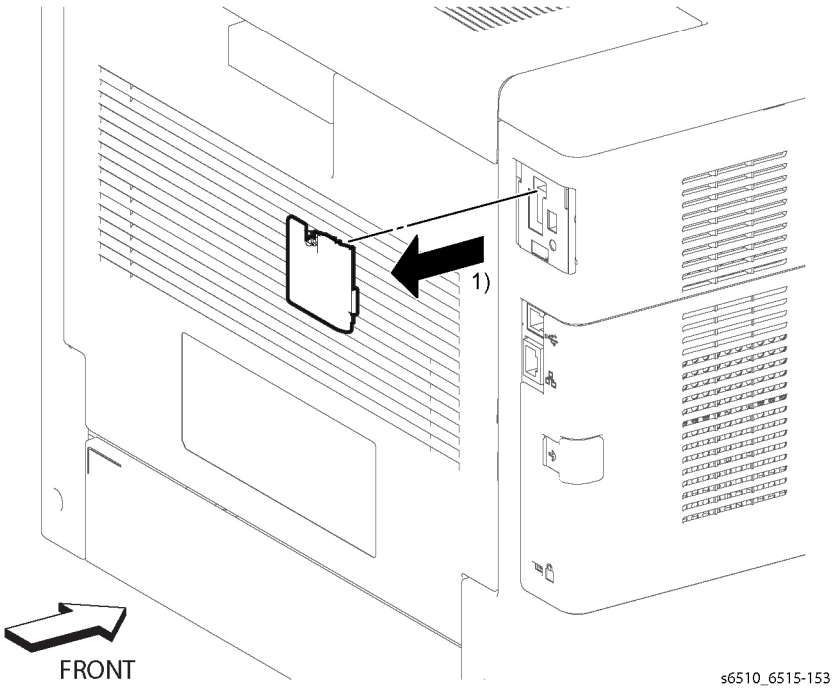

Figure 1 Remove the WIFI Cap (SFP)

REP 19.4.98 ESS Window Assembly Kit (SFP)

Parts List on PL 19.4 Item 98

Removal

WARNING

Switch off the electricity to the machine. Disconnect the power cord from the customer supply while performing tasks that do not need electricity. Electricity can cause death or injury. Moving parts can cause injury.

1. Refer to Figure 1 to release the lever in the direction of the arrow.

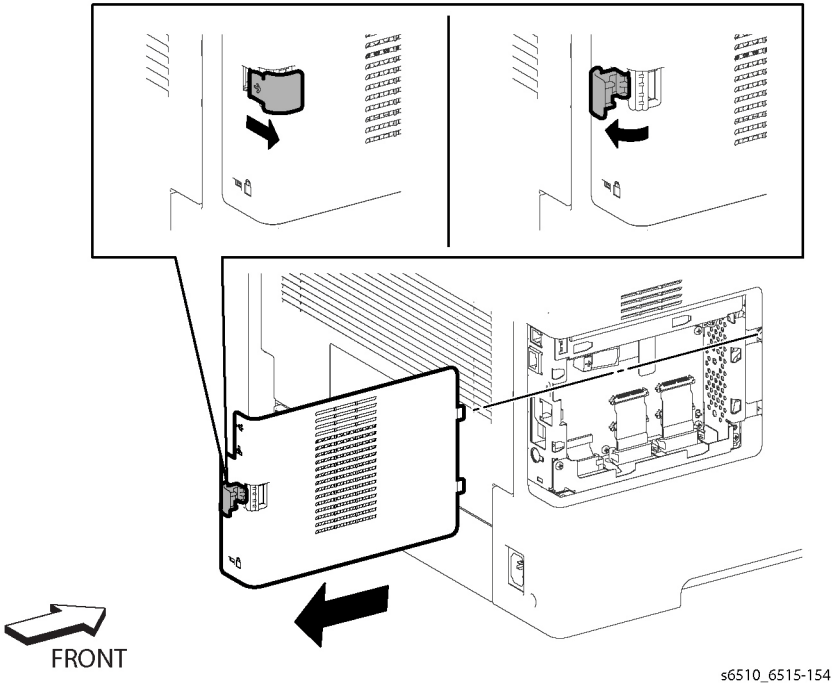

Figure 1 Remove the ESS Window Assembly (SFP)

2. Remove the ESS Window Assembly.

REP 19.4.99 Rear Cover Assembly Kit (SFP)

Parts List on PL 19.4 Item 99

Removal

WARNING

Switch off the electricity to the machine. Disconnect the power cord from the customer supply while performing tasks that do not need electricity. Electricity can cause death or injury. Moving parts can cause injury.

1. Remove the Right Side Cover, REP 19.3.97.
2. Open the Rear Cover.

CAUTION

In the following step, to prevent the cover from dropping down as you remove the straps, support the cover from underneath.

3. Refer to Figure 1 to remove the ends of the two Rear Cover Straps from the Rear Cover.
4. Close the Rear Cover.

CAUTION

In the following steps, to prevent the cover from falling off as you remove the hinge screw, support the cover from underneath.

5. Refer to Figure 1 to remove the two screws (silver, M3x6mm) attaching the Right Rear Hinge.
6. Remove the Right Rear Hinge and the Rear Cover Assembly from the printer while opening the cover.

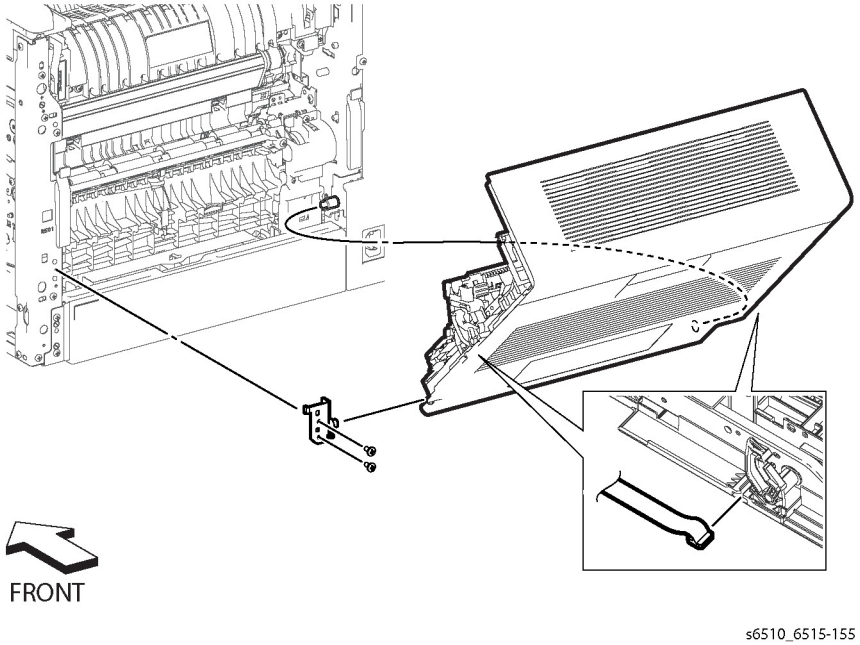

Figure 1 Remove the Rear Cover Assembly (SFP)

REP 50.1.1 DADF Assembly

Parts List on PL 50.1 Item 1

Removal

WARNING

Switch off the electricity to the machine. Disconnect the power cord from the customer supply while performing tasks that do not need electricity. Electricity can cause death or injury. Moving parts can cause injury.

1. Remove the Scanner Assembly, REP 50.1.13.
2. Refer to Figure 1 to release the hook on the rear side of the Left Band Cover at the left rear corner of the IIT assembly and remove the cover in the direction of the arrow.

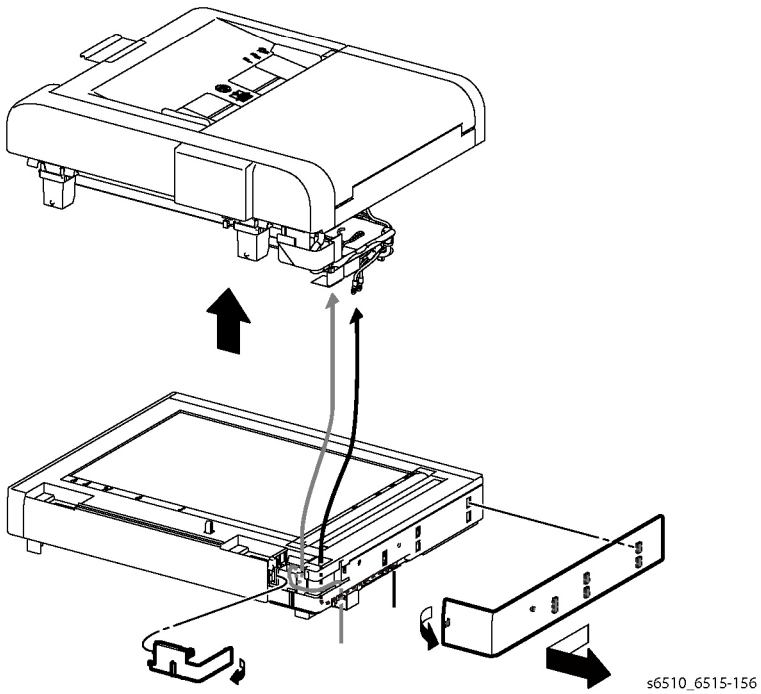

Figure 1 Remove the DADF Assembly

3. Refer to Figure 1 to release the hook and remove the FFC Cover from the IIT Assembly.
4. Refer to Figure 1 to remove the DADF harness out of its harness guide and up through the IIT Assembly.
   a. Fold the DADF harness connector up against the wires.
   b. Orient the harness connector to face the front of the printer.
   c. Pass the harness up through the IIT Assembly.
5. Refer to Figure 1 to remove the DADF assembly from the IIT assembly in the direction of the arrow.

Replacement

CAUTION

Avoid pinching wires when installing the DADF harness and FFC. Be sure to follow the harness routes as shown in Figure 2.

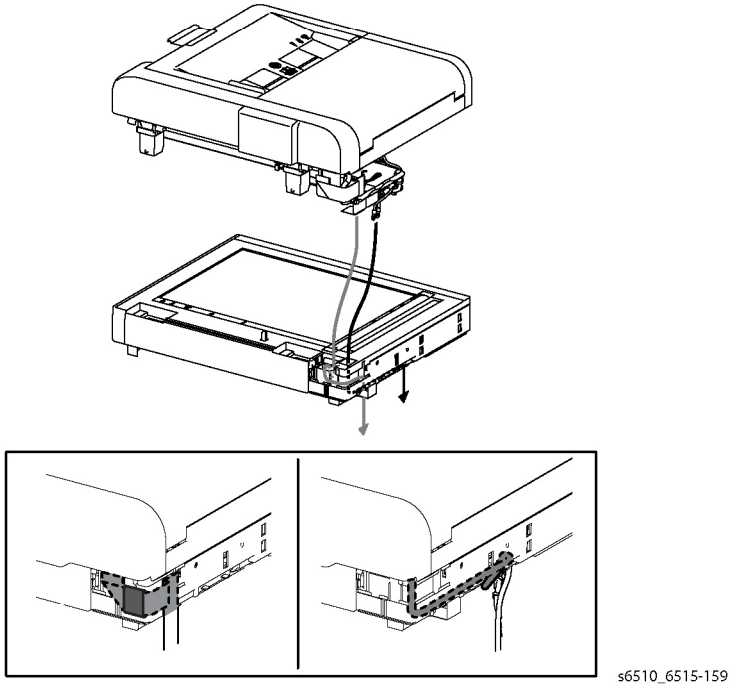

Figure 2 DADF Harness Routes

REP 50.1.2 IIT Assembly

Parts List on PL 50.1 Item 2

Removal

WARNING

Switch off the electricity to the machine. Disconnect the power cord from the customer supply while performing tasks that do not need electricity. Electricity can cause death or injury. Moving parts can cause injury.

1. Remove the Scanner Assembly, REP 50.1.13.
2. Remove the DADF Assembly, REP 50.1.1.

NOTE: *After the IIT assembly is replaced, the new IIT spare will come with NVRAM values to be entered into the machine via diags.* ***Follow the instructions that come with the spare IIT Assembly to enter the new color calibration values into the machine using diags dC131.***

REP 50.1.3 Left and Right Counterbalance Assemblies (Hinges)

Parts List on PL 50.1 Item 3, PL 50.1 Item 4

Removal

WARNING

Switch off the electricity to the machine. Disconnect the power cord from the customer supply while performing tasks that do not need electricity. Electricity can cause death or injury. Moving parts can cause injury.

1. Remove the DADF, REP 50.1.1, and refer to Figure 1 to rest the DADF on the work surface as shown.
2. Refer to Figure 1 to remove eight screws (silver, tapping, M3x8) to remove the Left and Right Hinges.

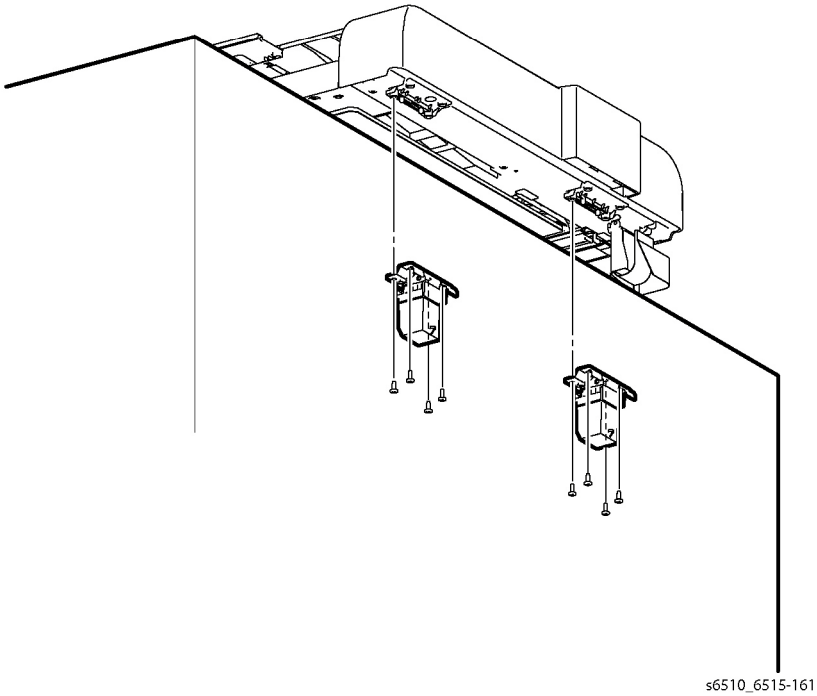

Figure 1 Remove the Hinges

Replacement

CAUTION

The Hinges are keyed and must be installed in their specified locations.

REP 50.1.11 DADF Tray Assembly

Parts List on PL 50.1 Item 11

Removal

WARNING

Switch off the electricity to the machine. Disconnect the power cord from the customer supply while performing tasks that do not need electricity. Electricity can cause death or injury. Moving parts can cause injury.

1. Refer to Figure 1 to open the Upper Feeder Assembly.

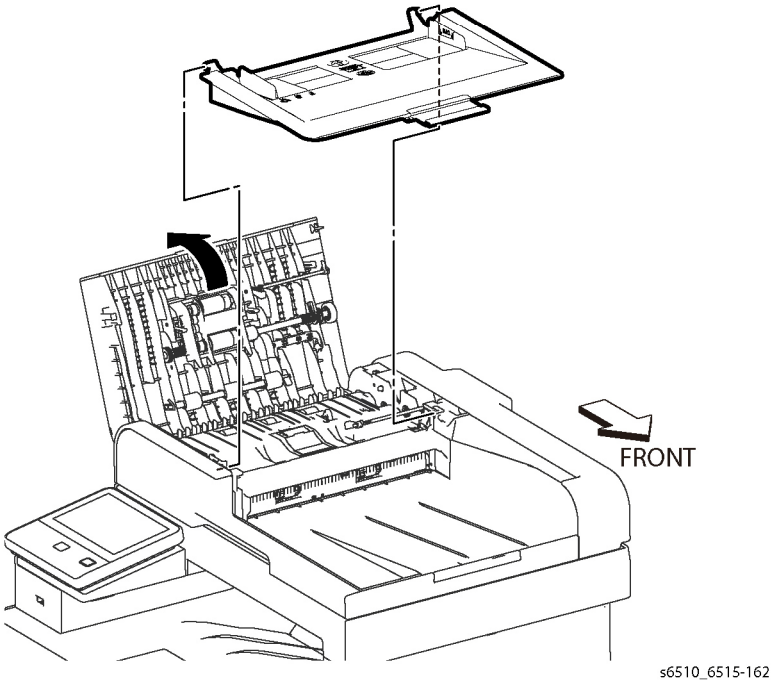

Figure 1 Remove the DADF Tray Assembly

2. Release the front boss of the DADF Tray Assembly by lifting the right end of the tray up slightly and pushing the tray from the front towards the rear of the printer.
3. Release the tray's rear boss and remove the tray.

Replacement

1. Tilt the right end of the tray up slightly.
2. Insert the rear boss into position.
3. Push the tray towards the rear of the printer while seating the front boss.

REP 50.1.13 Scanner Assembly

Parts List on PL 50.1 Item 13

Removal

WARNING

Switch off the electricity to the machine. Disconnect the power cord from the customer supply while performing tasks that do not need electricity. Electricity can cause death or injury. Moving parts can cause injury.

1. Remove the Right Cover Assembly, REP 19.1.97.
2. Remove the Left Cover Assembly, REP 19.2.1.
3. Remove the ESS Top Plate, REP 18.1.18.
4. Refer to Figure 1 to remove the screw (silver, tapping, M3x8) attaching the Left Rear Inner IIT Cover and remove the cover.

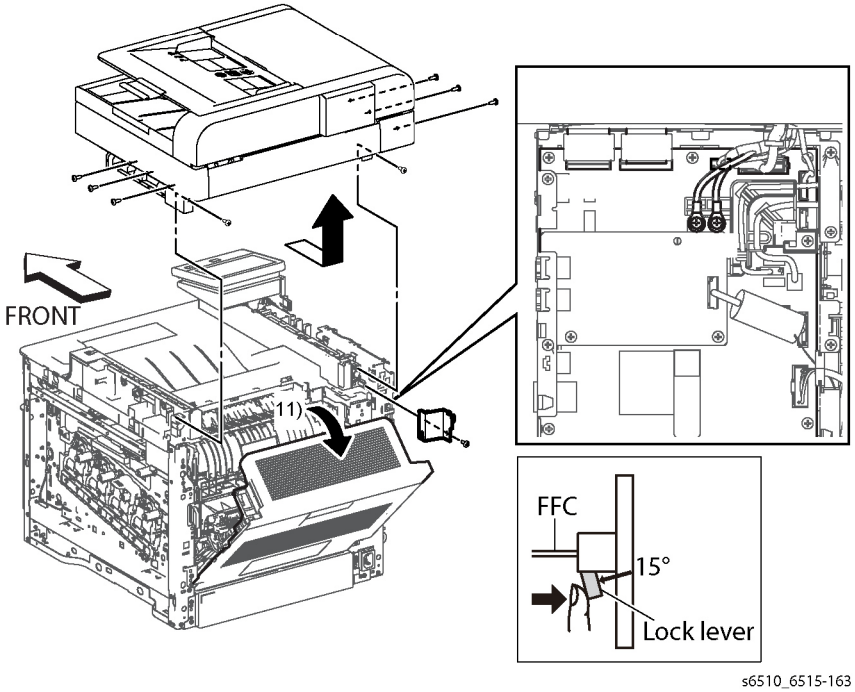

Figure 1 Disconnect Harness and Remove the Scanner Assembly

5. Refer to Figure 1 to remove the two screws (silver, M3x6mm) attaching the green and black ground harnesses.

CAUTION

In the following step, avoid breaking the FFC lock lever when releasing the FFC. Open the lever just far enough to release the FFC.

NOTE: *In the following step, when releasing the FFC lock lever on the connector, slightly open the lock lever to 15 degrees until the lock lever contacts the FFC connector as shown in Figure 1. After releasing the lock lever, hold the lever while gently pulling the FFC from the connector.*

6. Unplug the two FFCs (P/J1370, P/J1371) and the three connectors (P/J1374, P/J1377, P/J1372).
7. Refer to Figure 1 to remove the eight screws (silver, tapping, M3x8) attaching the Scanner Assembly (three screws on each side and two at the rear corners).
8. Remove the Scanner in the direction of the arrow.

REP 50.1.14 DADF Actuator

Parts List on PL 50.1 Item 14

Removal

WARNING

Switch off the electricity to the machine. Disconnect the power cord from the customer supply while performing tasks that do not need electricity. Electricity can cause death or injury. Moving parts can cause injury.

1. Refer to Figure 1 to open the DADF Upper Feeder Assembly.

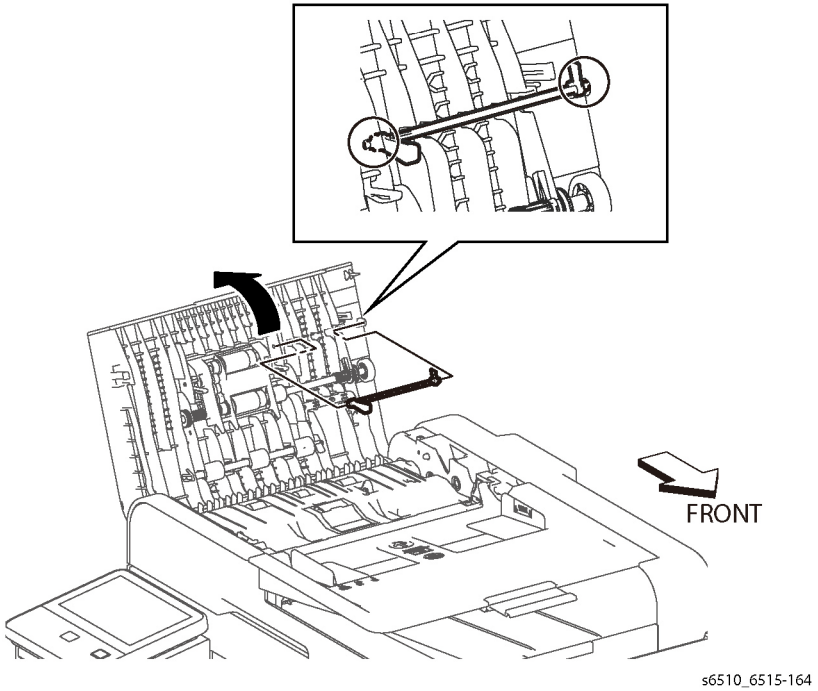

Figure 1 Remove the DADF Actuator

2. Release the two bosses at the ends of the DADF Actuator by slightly bending the Actuator, and remove it.

REP 50.1.99 DADF Feed Roller Kit

Parts List on PL 50.1 Item 99

Removal

WARNING

Switch off the electricity to the machine. Disconnect the power cord from the customer supply while performing tasks that do not need electricity. Electricity can cause death or injury. Moving parts can cause injury.

1. Refer to Figure 1 to open the DADF Upper Feeder Assembly.

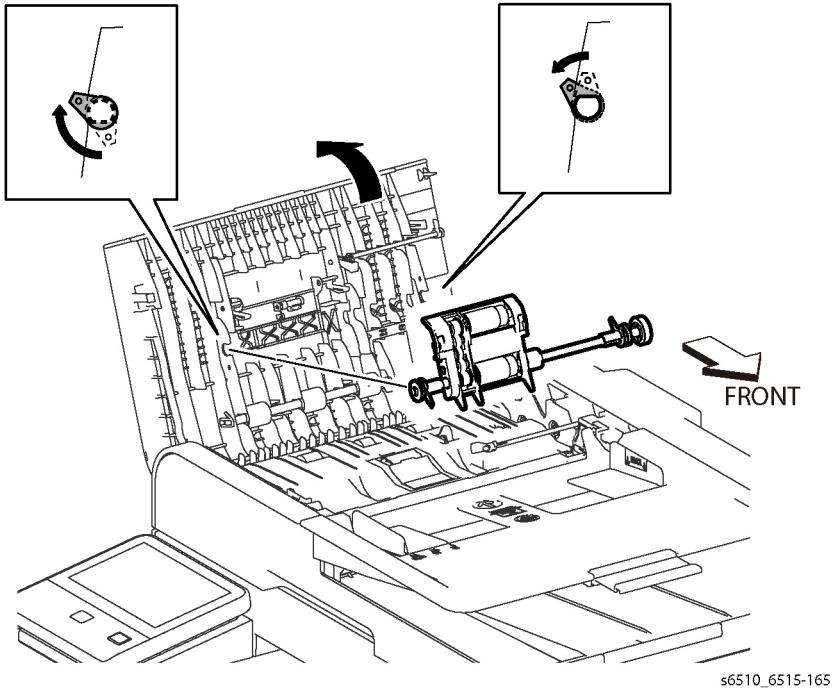

Figure 1 Remove the DADF Feed Roller

CAUTION

In the following steps, avoid breaking the DADF Feed Roller and related hooks. Do not bend the hooks excessively. Carefully align the DADF Feed Roller with its mating features.

2. Refer to Figure 1 to rotate the two hooks, one on each side of the DADF Feed Roller, and release the bosses.
3. Remove the DADF Feed Roller.
4. Refer to Figure 2 to remove the Separator Cover Assembly in the direction of the arrow.
5. Remove the DADF Separator Spring.

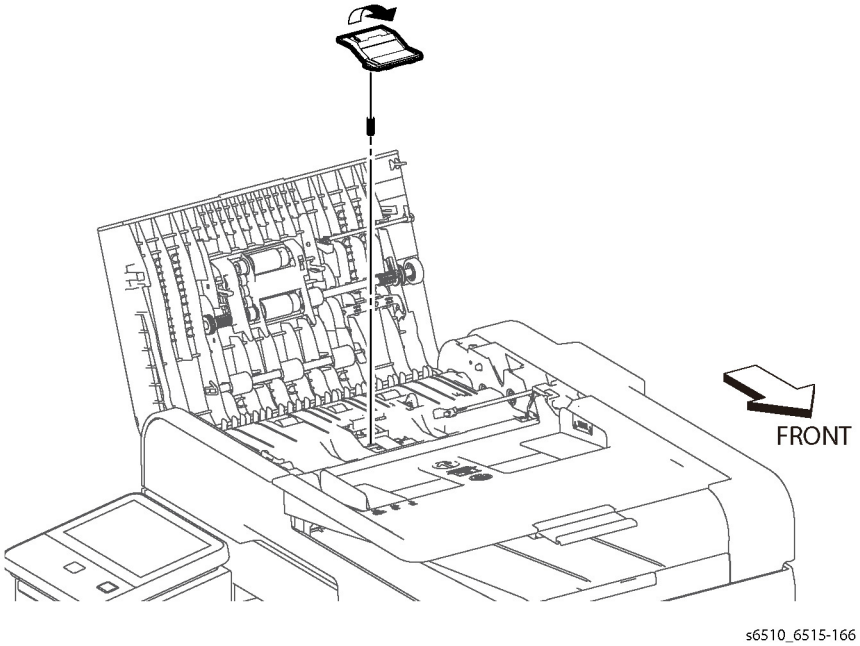

Figure 2 Remove the DADF Separator Cover and Spring

5 Parts Lists

UI
PL 1.1 UI (MFP) 5-3
PL 1.2 UI (SFP) 5-4

LPH
PL 2.1 LPH 5-5

Drive
PL 3.1 Drive 5-6

NOHAD
PL 4.1 NOHAD 5-7

Dispenser
PL 5.1 Dispenser 5-8

Transfer
PL 6.1 Transfer 5-9

Fusing
PL 7.1 Fuser 5-10

Xerographic
PL 8.1 Xerographic 5-11

Tray
PL 9.1 Tray 5-12

Option Feeder
PL 10.1 Option Feeder (1/3) 5-13
PL 10.2 Option Feeder (2/3) 5-14
PL 10.3 Option Feeder (3/3) 5-15

MSI
PL 13.1 MSI (1/2) 5-16
PL 13.2 MSI (2/2) 5-17

Duplex
PL 14.1 Duplex 5-18

Registration
PL 15.1 Registration (1/2) 5-19
PL 15.2 Registration (2/2) 5-20

Exit
PL 17.1 Exit 5-21

Electrical
PL 18.1 Electrical MFP (1/4) 5-22
PL 18.2 Electrical MFP (2/4) 5-23
PL 18.3 Electrical MFP (3/4) 5-24
PL 18.4 Electrical MFP (4/4) 5-25
PL 18.5 Electrical SFP (1/4) 5-26
PL 18.6 Electrical SFP (2/4) 5-27
PL 18.7 Electrical SFP (3/4) 5-28
PL 18.8 Electrical SFP (4/4) 5-29

Cover
PL 19.1 Cover MFP (1/2) 5-30
PL 19.2 Cover MFP (2/2) 5-31
PL 19.3 Cover SFP (1/2) 5-32
PL 19.4 Cover SFP (2/2) 5-33

Scanner
PL 50.1 Scanner 5-34

PL 1.1 UI (MFP)

Item	Part	Description
1	848K95745	UI Console Assy MFP
2	–	UI Inner Cover
3	–	UI Frame Cover
4	–	UI Frame Assy
5	952K20900	UI Harness (J1352-J1)
6	–	Speaker Harness
7	822E32001	UI Access Door
99	607K00020	Kit UI Frame Assy (with 2-4)

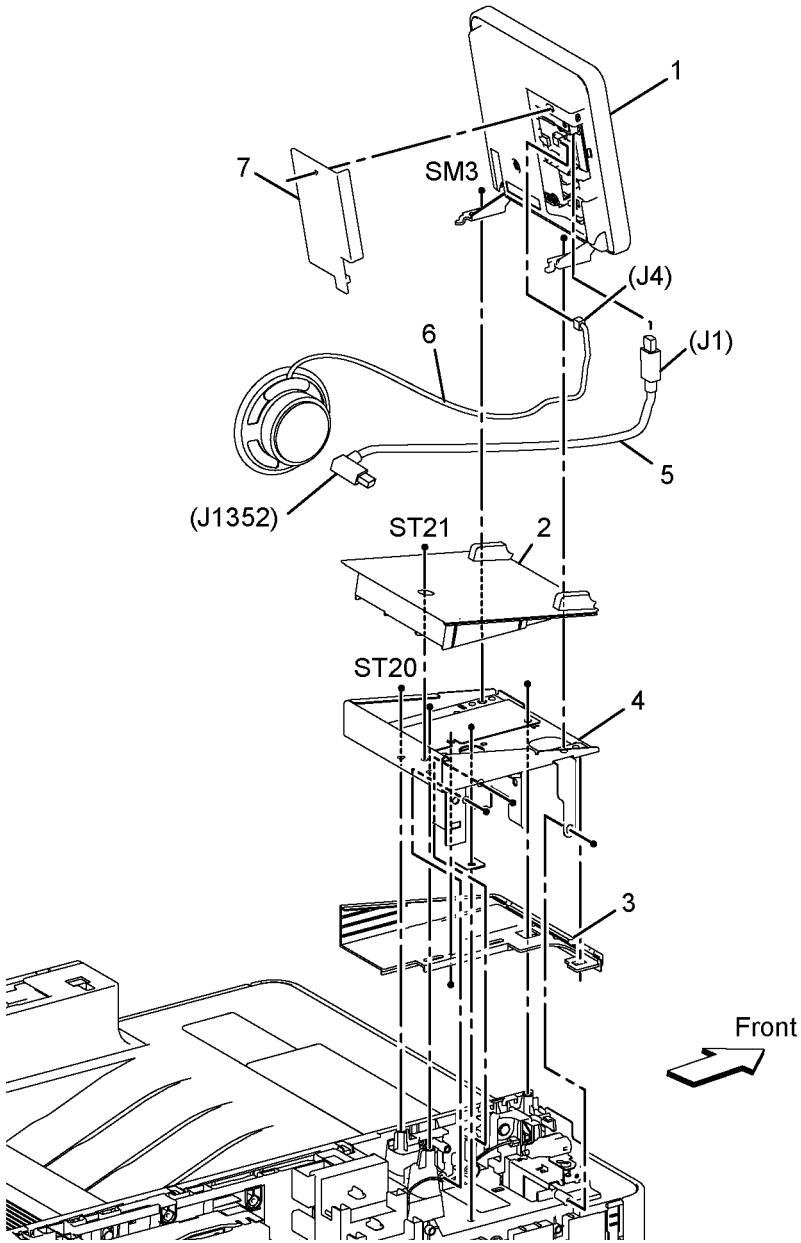

PL 1.2 UI (SFP)

Item	Part	Description
1	848K95775	UI Console Assy SFP
2	952K20952	UI Harness (J306-J220)

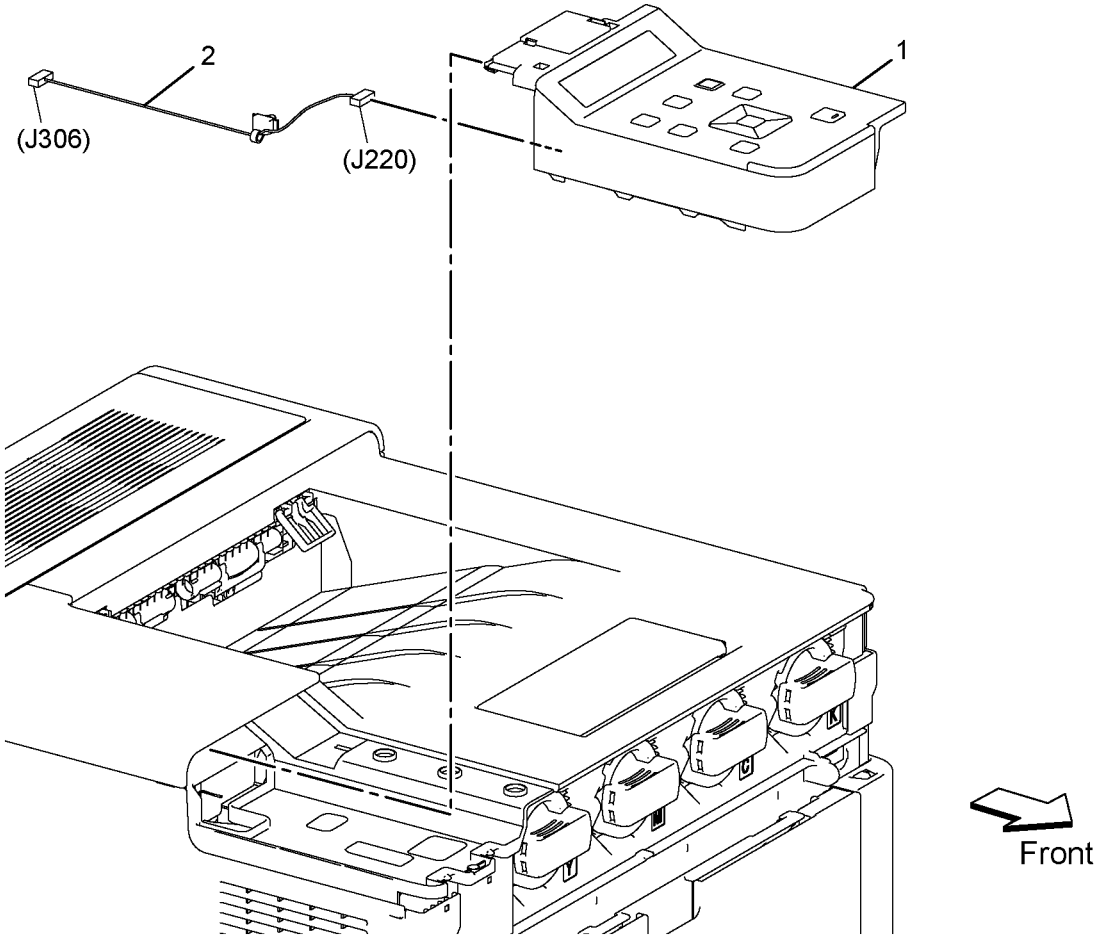

0501002A-SUR

PL 2.1 LPH

Item	Part	Description
1	930K00990	Head Assy LPH Color
2	–	FFC Assy LPH Y (J1360)
3	–	FFC Assy LPH M (J1361)
4	–	FFC Assy LPH C (J1362)
5	–	FFC Assy LPH K (J1363)
6	–	Core Ferrite LPH
7	–	Guide Drum Cartridge
8	–	Cover Core
9	–	Harness Assy Deve/Xero C (J400-J404-J403-J402-J401)
10	–	Holder CRUM Xero
11	604K98080	Cover Assy Guide
12	–	Harness Assy Rad Hum (J140-J141A, J144A)
13	–	Core Ferrite LPH
99	604K97600	Kit Xero CRUM LPH FFC (With 2-10, 12)

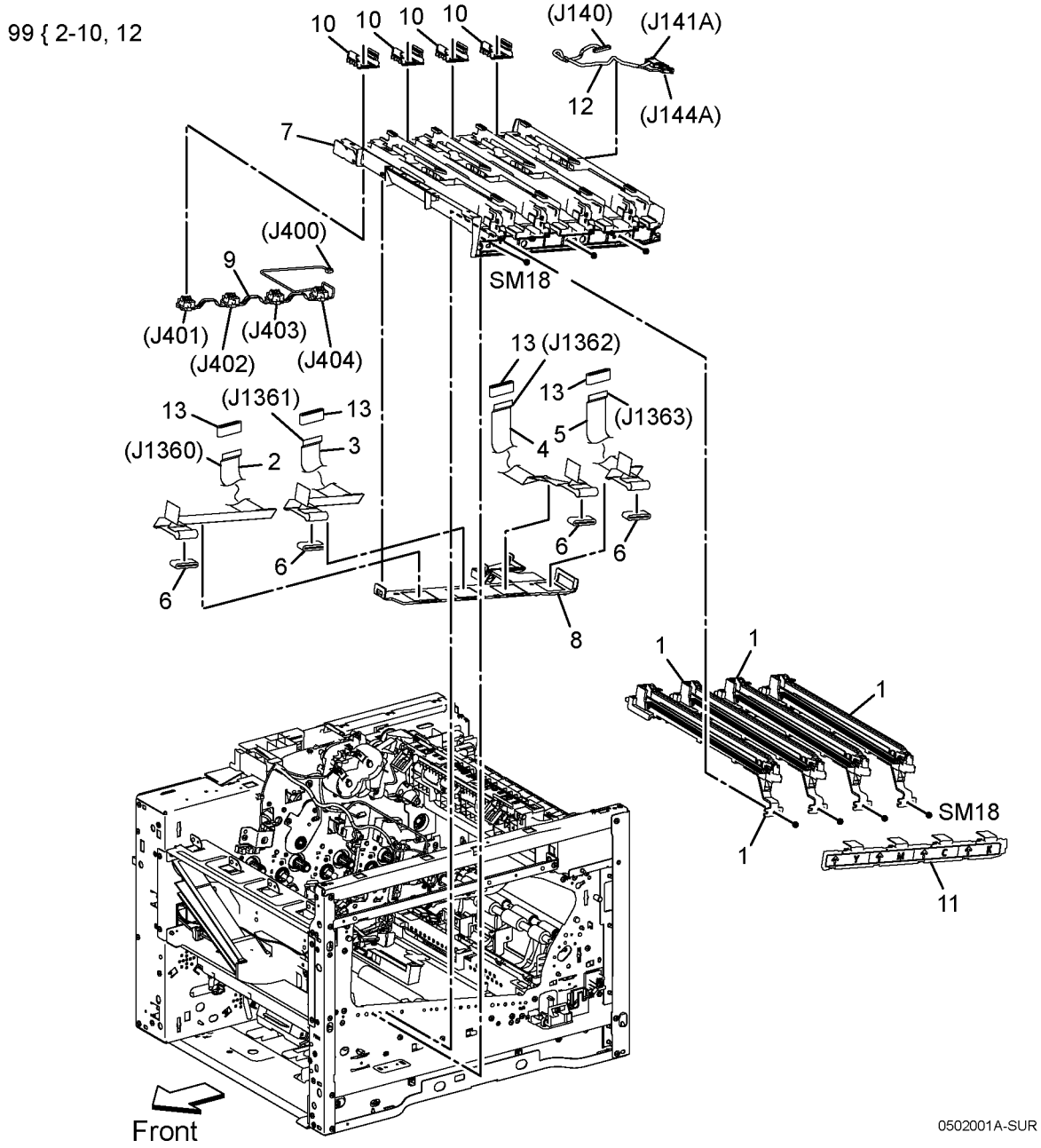

PL 3.1 Drive

Item	Part	Description
1	007K21968	Main Drive Assy (SCC)
2	007K21972	PH Drive Assy
3	007K21981	MSI Drive Assy
4	005K84490	Waste Drive Assy

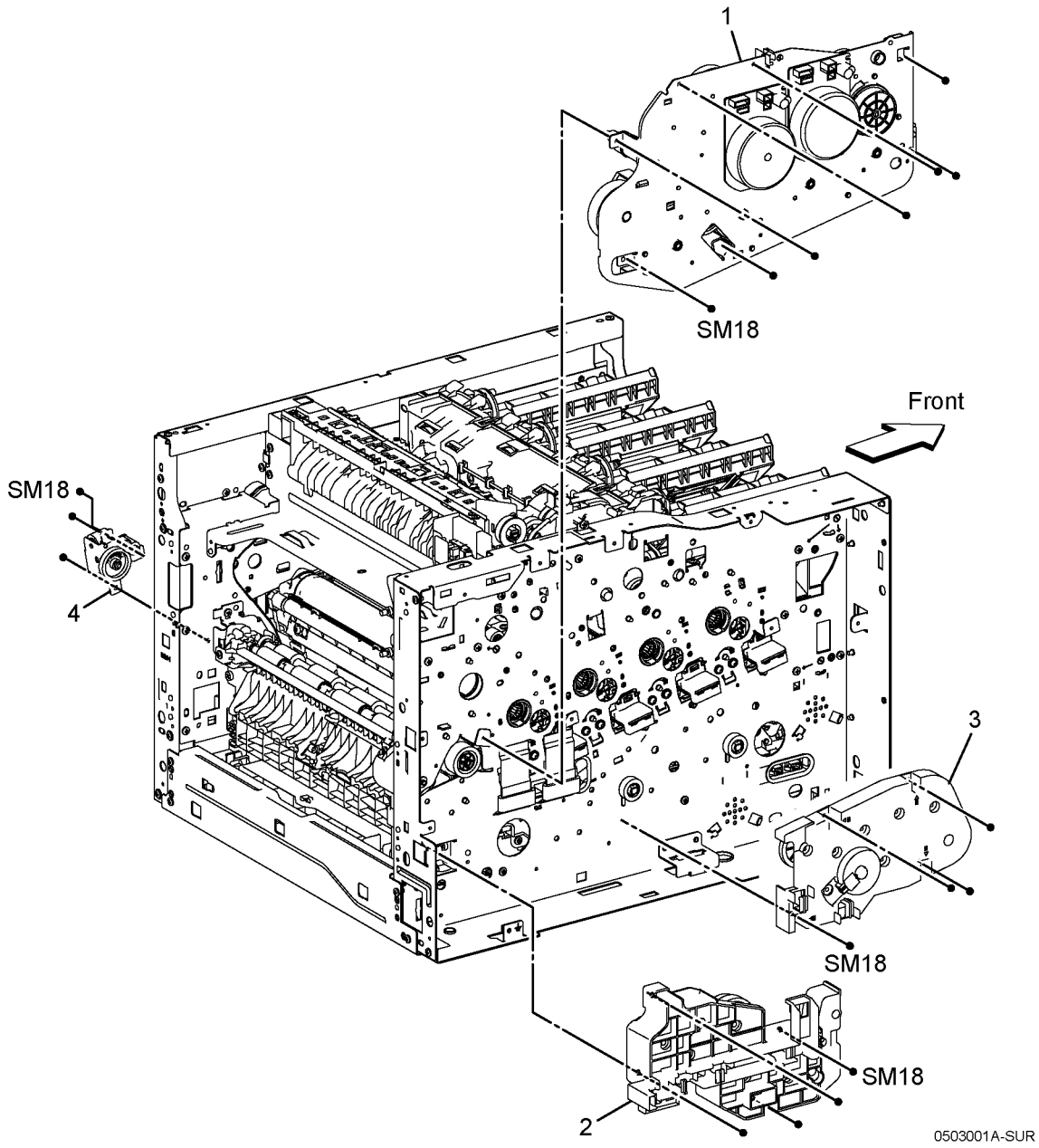

PL 4.1 NOHAD

Item	Part	Description
1	127K74080	Main Fan (SCC)
2	–	Main Duct Fan
3	–	Process Duct
4	017K94350	Foot Assy
99	604K77650	Kit Foot Assy

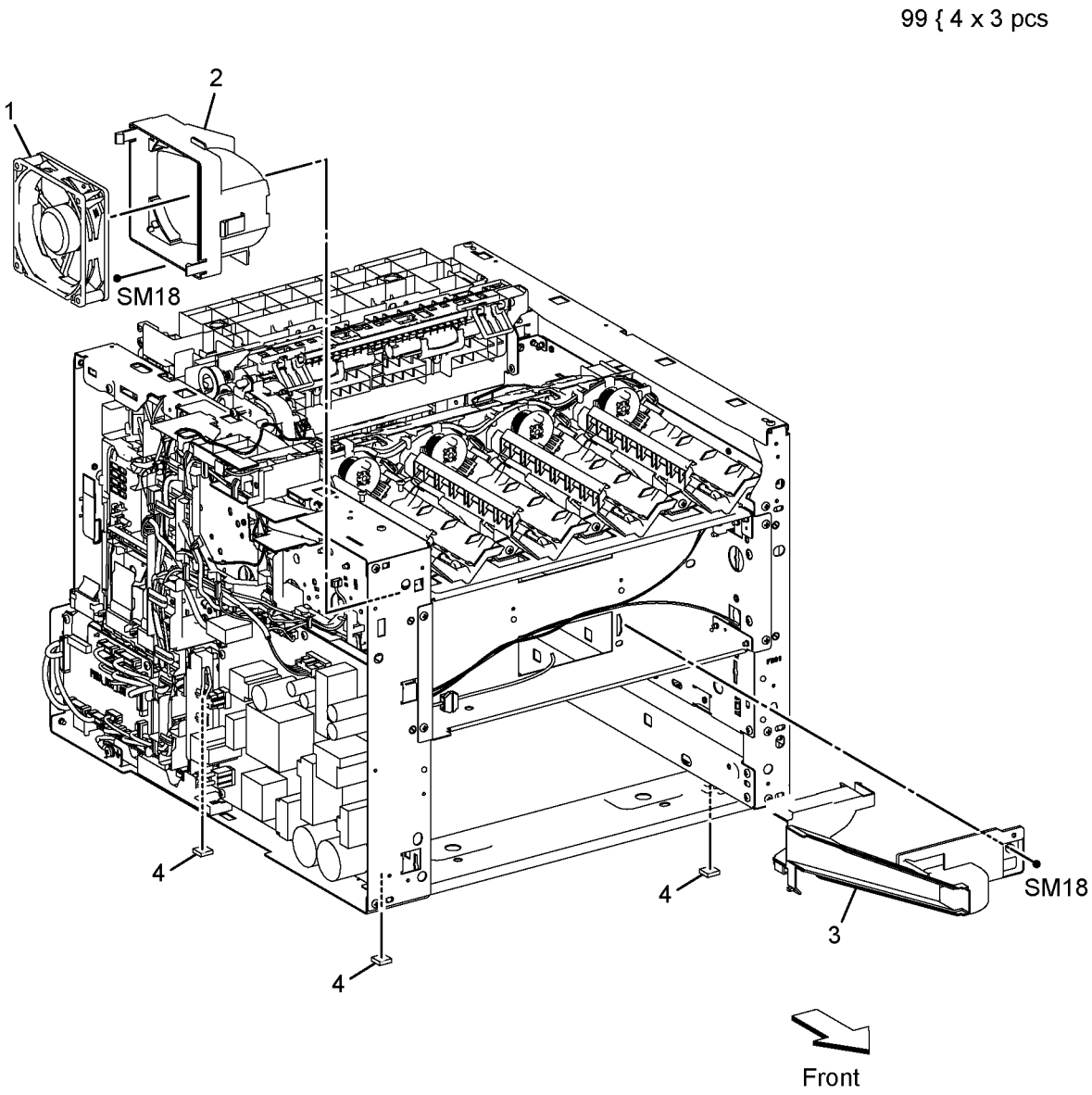

0504001A-SUR

PL 5.1 Dispenser

Item	Part	Description
1	–	Drive Assy Disp
2	094K94240	Disp Assy Y (With 6-7)
3	094K94250	Disp Assy M (With 6-7)
4	094K94260	Disp Assy C (With 6-7)
5	094K94270	Disp Assy K (With 6-7)
6	113K83840	Toner CRUM Connector Assy (With 7)
7	–	Toner CRUM PWBA
8	–	Harness Assy Disp (J120-J121, J122)
9	930W00511	Toner Full Sensor
10	–	Toner CRUM Harness Assy (J110-J111-J112-J113-J114)
11	–	Toner Cartridge Y
12	–	Toner Cartridge M
13	–	Toner Cartridge C
14	–	Toner Cartridge K
15	–	Clear Cover
99	604K97530	Kit Drive Assy Disp (With 1, 8, 10)

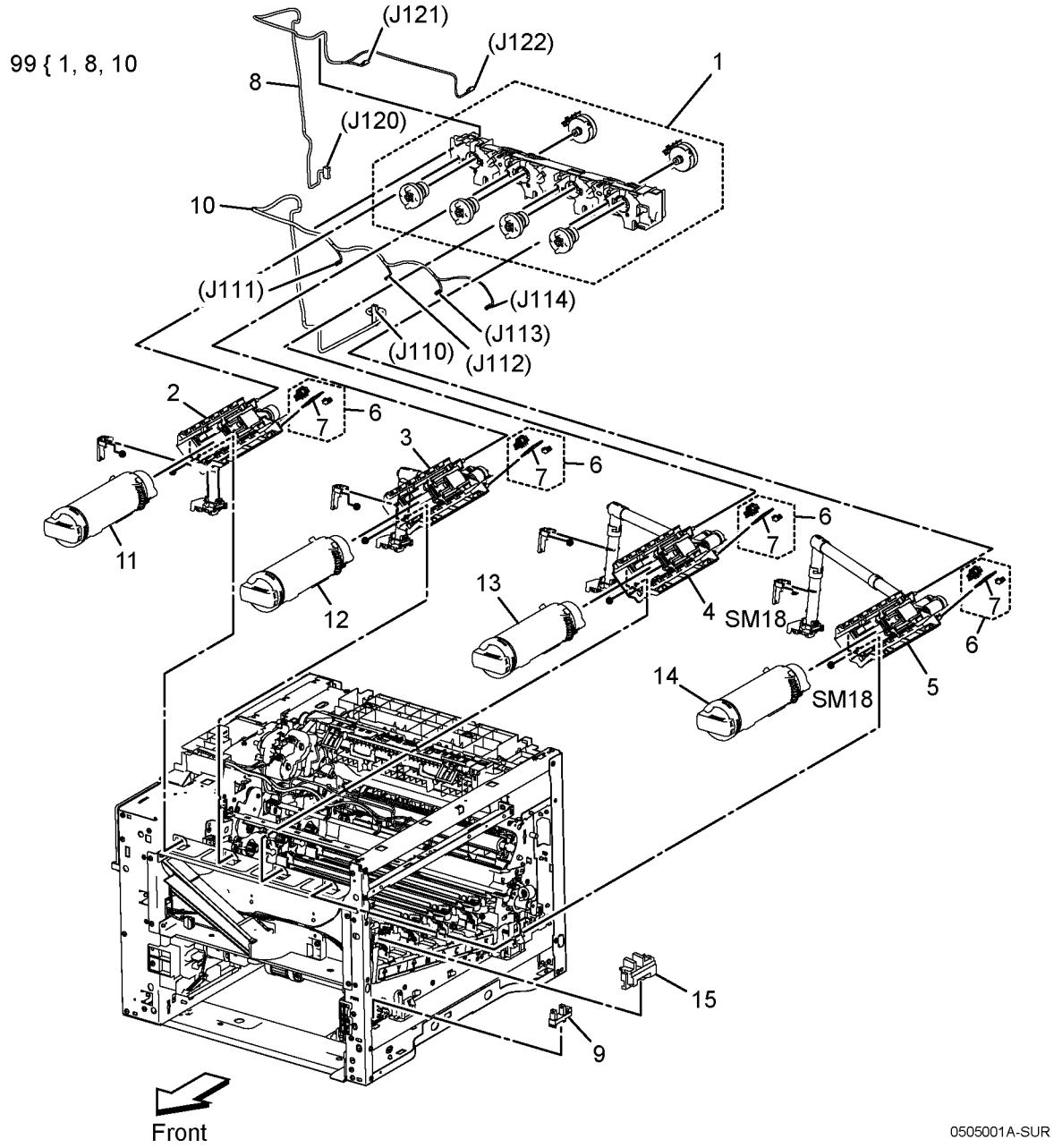

PL 6.1 Transfer

Item	Part	Description
1	607K00930	Transfer Belt Unit
2	–	CTD Upper Chute
3	–	CTD Plate
4	–	Sensor Cover
5	–	Sensor R-RAD A (R-RAD Sensor)
6	–	Sensor R-RAD Low A (R-RAD Low Sensor)
7	–	Sensor Hum And Temp (Humi. and Temp. Sensor)
8	930K00210	CTD Sensor Assy (With 2, 3, 5-7, 9, 10)
9	–	CTD Harness Assy (J141B-J142, J143)
10	–	Humidity and Temperature Sensor Harness Assy (J144B-J145)
11	930W00123	Interlock Photo Sensor (K Mode Sensor)

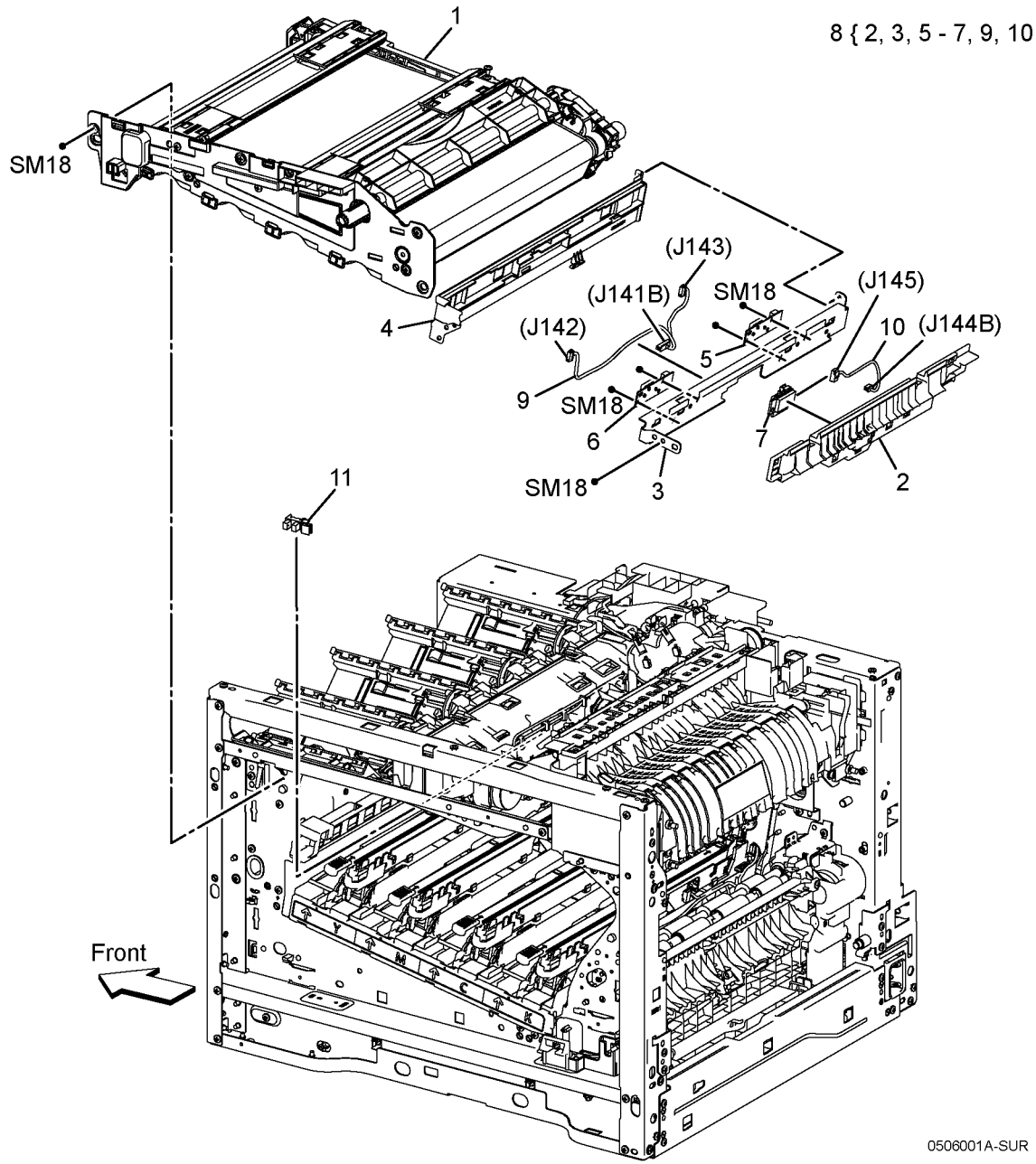

PL 7.1 Fuser

Item	Part	Description
1	126K36430	Fuser Assy 110V (SCC)
–	126K36440	Fuser Assy 220V (SCC)
2	822E20922	Fuser Harness Cover

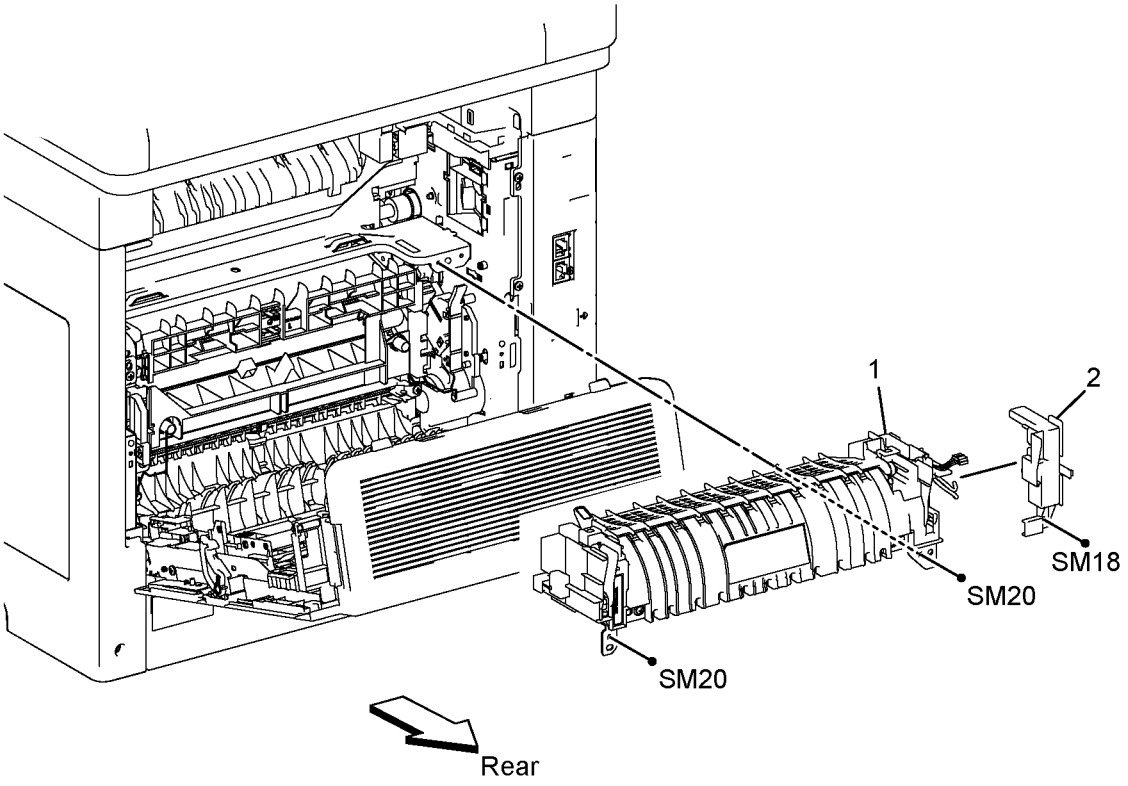

0507001A-SUR

PL 8.1 Xerographic

Item	Part	Description
1	–	Drum Cartridge CRU Assy Y
2	–	Drum Cartridge CRU Assy M
3	–	Drum Cartridge CRU Assy C
4	–	Drum Cartridge CRU Assy K
5	–	Waste Cartridge Assy
6	042K94970	LPH Cleaner Assy
7	–	Clean Cover

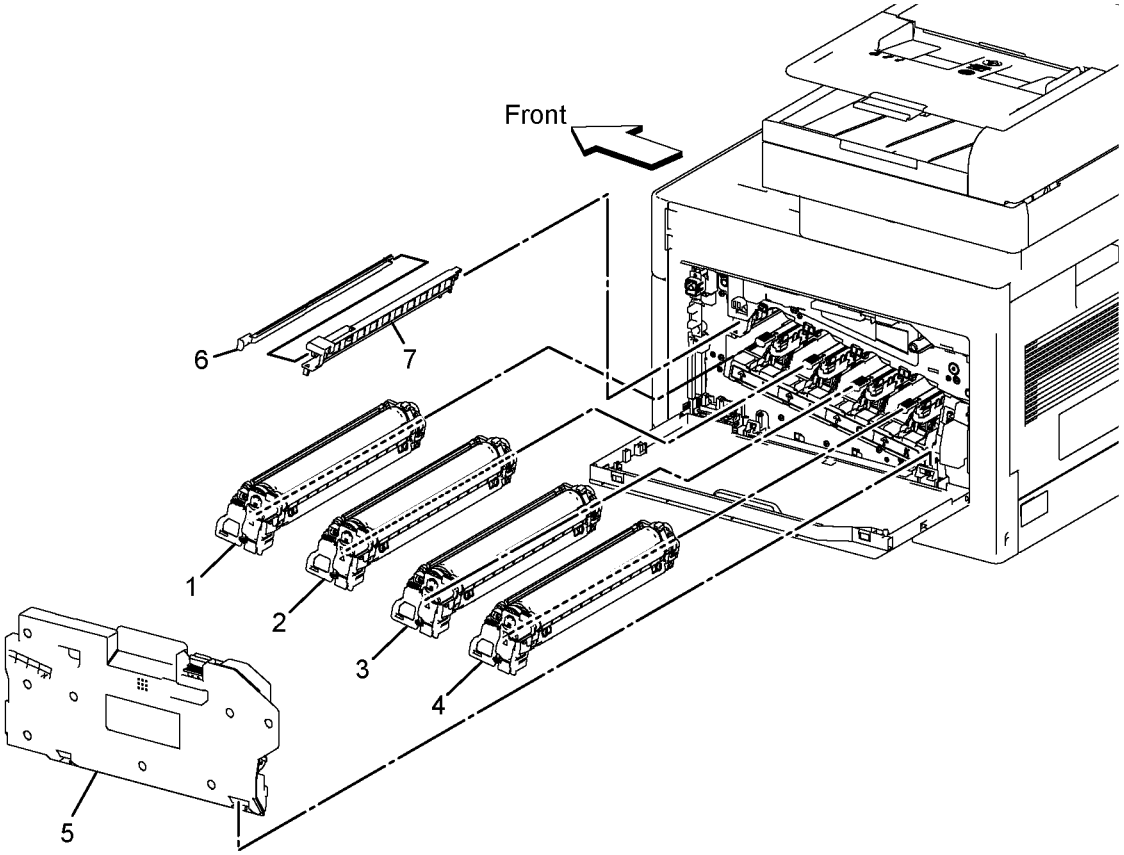

0508001A-SUR

PL 9.1 Tray

Item	Part	Description
1	607K00960	Cassette Assy 250 IOT (SCC) (With 2-10)
2	019K17070	Holder Assy Separator CST (With 3-6)
3	–	Cassette Feed Roll Assy (P/O PL 10.2 Item 7)
4	–	Separater Holder
5	–	Cassette Separater Shaft
6	–	Friction Clutch Assy
7	–	Handle CST 250
8	–	Gear Assy
9	–	Bottom Plate Assy
10	–	Housing Assy End 250
11	948K11160	Dust Cover 250 (with Label)
98	607K00051	Kit Feed And Separator Roll (With 2, 3x2 Pcs)

1 { 2 - 10

2 { 3 - 6

98 { 2, 3 x 2 pcs,

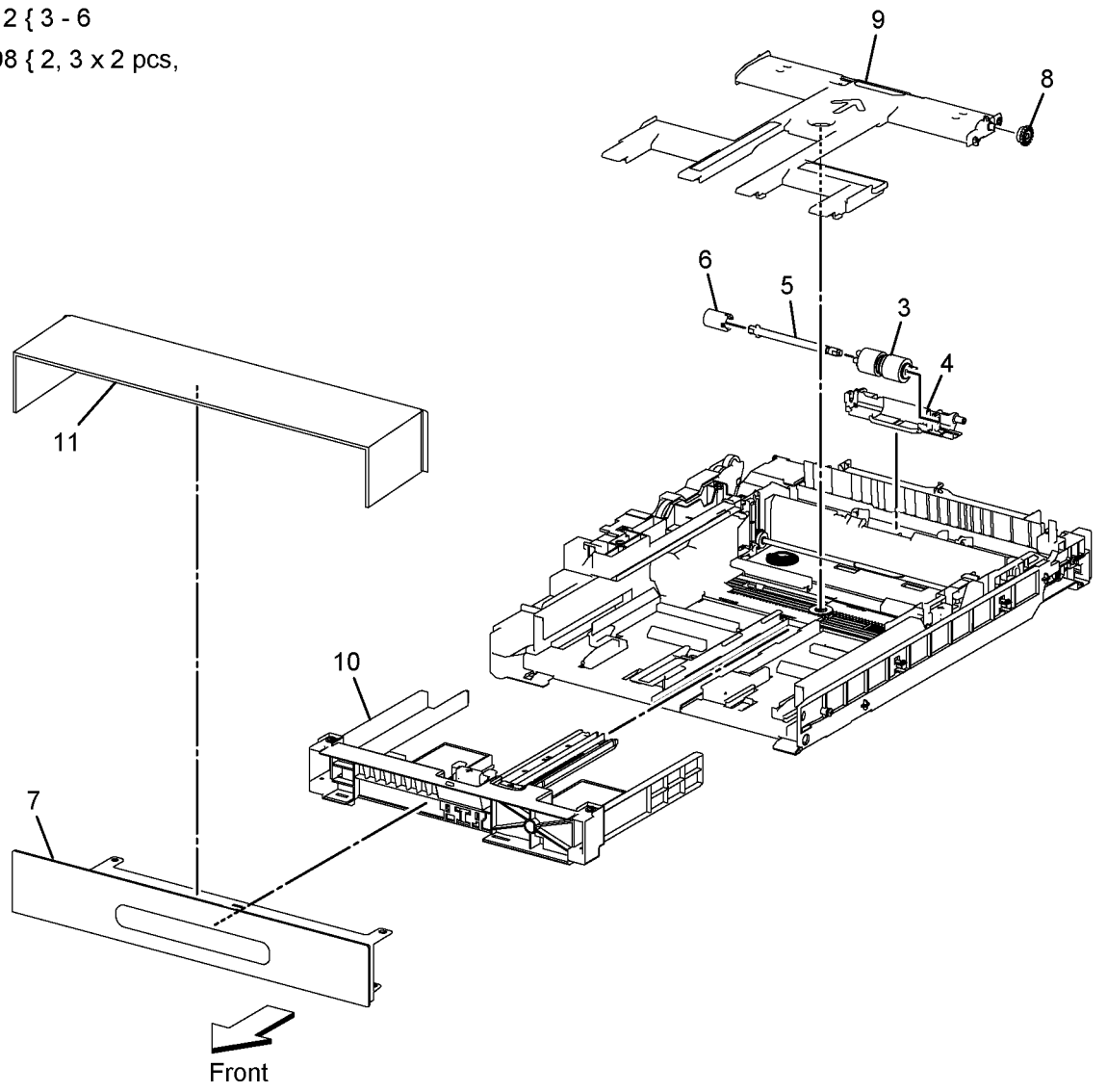

0509001A-SUR

PL 10.1 Option Feeder (1/3)

Item	Part	Description
1	607K01910	Kit Feeder Assy OPF 550 (With 2 - 23, PL 10.2)
2	–	Cover Side Left OPF 550
3	–	Cover Side Right OPF 550
4	–	Cover Lip Top OPF 550
5	–	Cover Top OPF 550
6	–	Cover Rear OPF 550
7	–	Cover Rear Under OPF 550
8	–	Cover Rear Top OPF 550
9	–	Foot Base OPF 550
10	017K94350	Foot OPF 550
11	–	PWB Assy OPF 550
12	110K16610	Switch Assy Size OPF 550
13	–	Lock Assy OPF 550
14	–	Gear Rack Lock OPF 550
15	–	Latch Tray OPF 550
16	–	Harness Assy FDR Drawer (J815-J816)
17	–	Harness Assy OPF 2C (J802-J801)
18	–	Motor Assy Drive OPF 550
19	–	Chute Rear OPF 550
20	–	Guide Harness OPF 550
21	–	Front Left Cover OPF
22	–	Tray LED Assy (ACO/MEXICO/FX)
23	–	LED Harness Assy (J813-J814)
98	607K00450	Kit OPT FDR LED (With 21 - 23)

1 { 2 - 23, PL10.2

98 { 21 - 23

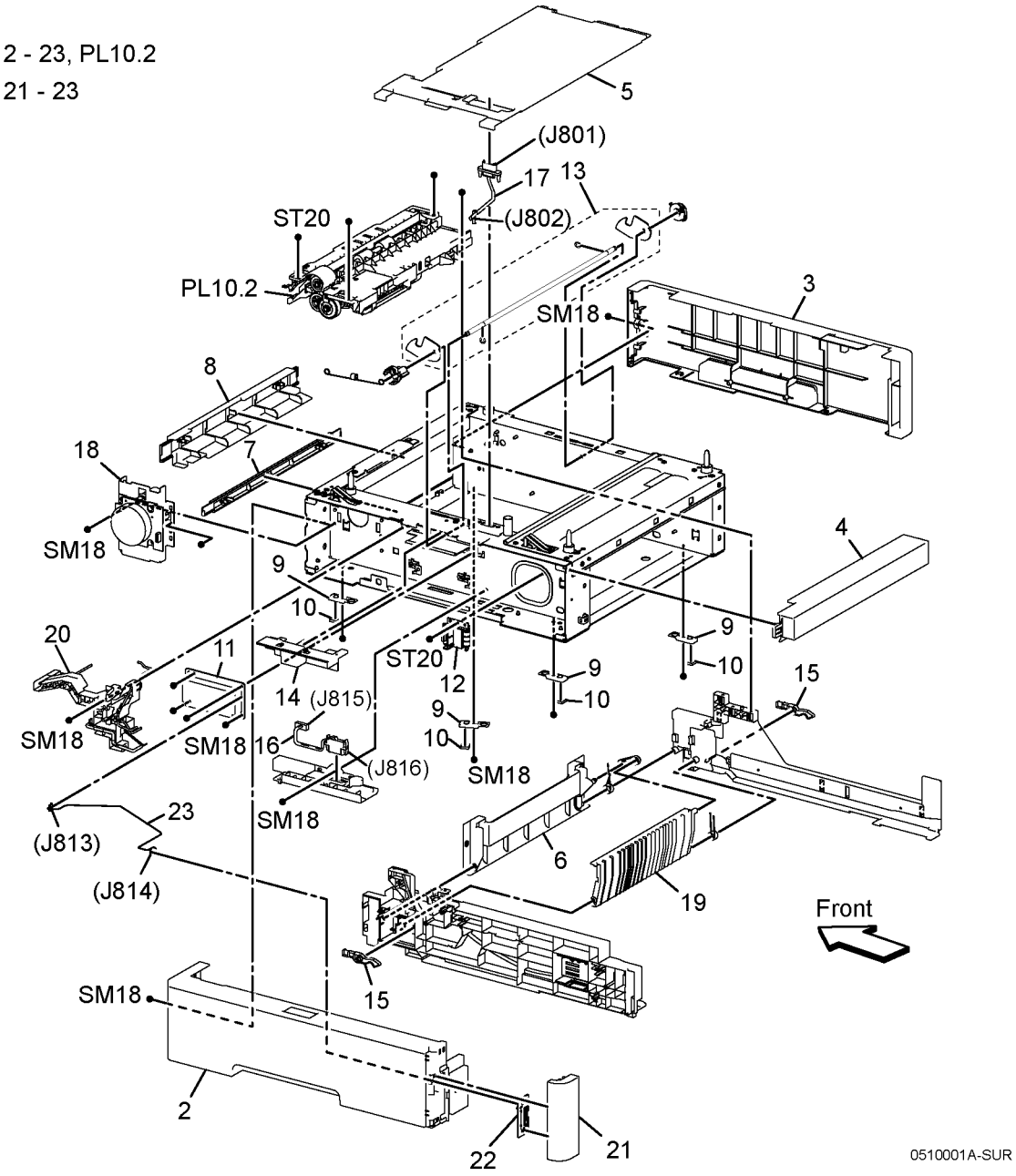

PL 10.2 Option Feeder (2/3)

Item	Part	Description
1	–	Option 550 Feeder Assy (With 2-15)
2	–	Feeder Top Frame
3	–	Gear P24-P27
4	–	Option 550 Feeder Cluch Assy
5	–	Nudger Support
6	–	Upper Feed Chute
7	859K00100	Feed Roll Assy
8	120E35551	No Paper Actuator
9	–	Photo Sensor (Optional Feeder No Paper Sensor)
10	–	Option 550 Feed Shaft
11	–	Option 550 Feeder Nudger Shaft
12	–	Option 550 Feeder Harness Cover
13	–	Feeder Chute
14	–	Optioin 550 Feeder Ttray Pinch Roll Assy
15	–	Option 550 Feeder Tray Roll Assy
16	–	Option 550 Feeder Clutch Assy (SCC) (Optional Feed Clutch)
17	–	Photo Sensor (Optional Path Paper Sensor)

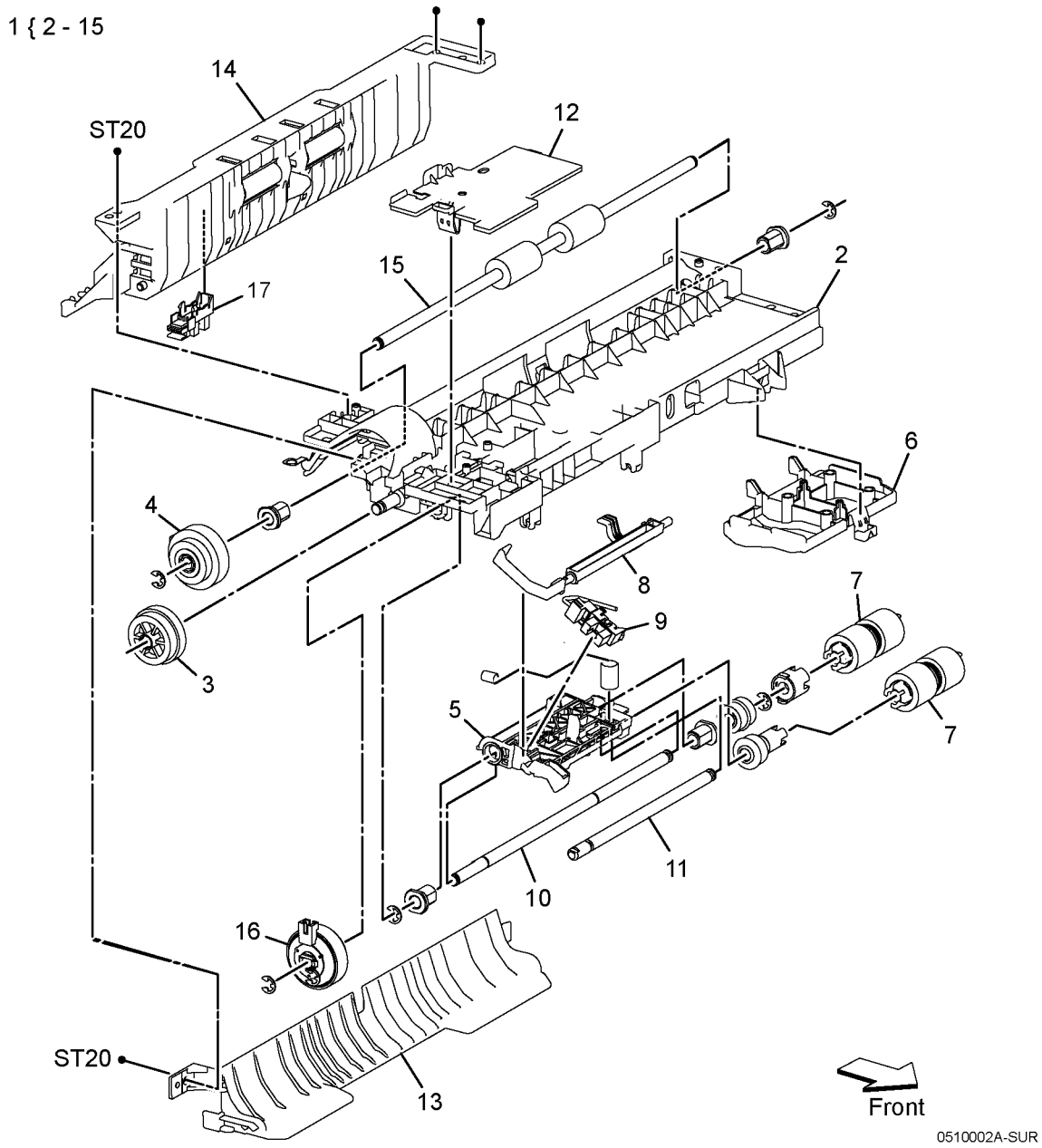

PL 10.3 Option Feeder (3/3)

Item	Part	Description
1	050K75820	Option 550 Feeder Cassette Assy (With 2-6)
2	019K17070	Cassette Separater Holder Assy (With 3-6)
3	–	Cassette Feed Roll Assy (P/O PL 10.3 Item 99)
4	–	Separator Holder
5	–	Separator Shaft
6	–	Friction Clutch Assy
7	948K11520	Option 550 Feeder Dust Cover
98	607K00051	Feed And Separator Roll Kit (With 2, 3 x 2 pcs)

1 { 2 - 6

2 { 3 - 6

98 { 2, 3 x 2 pcs

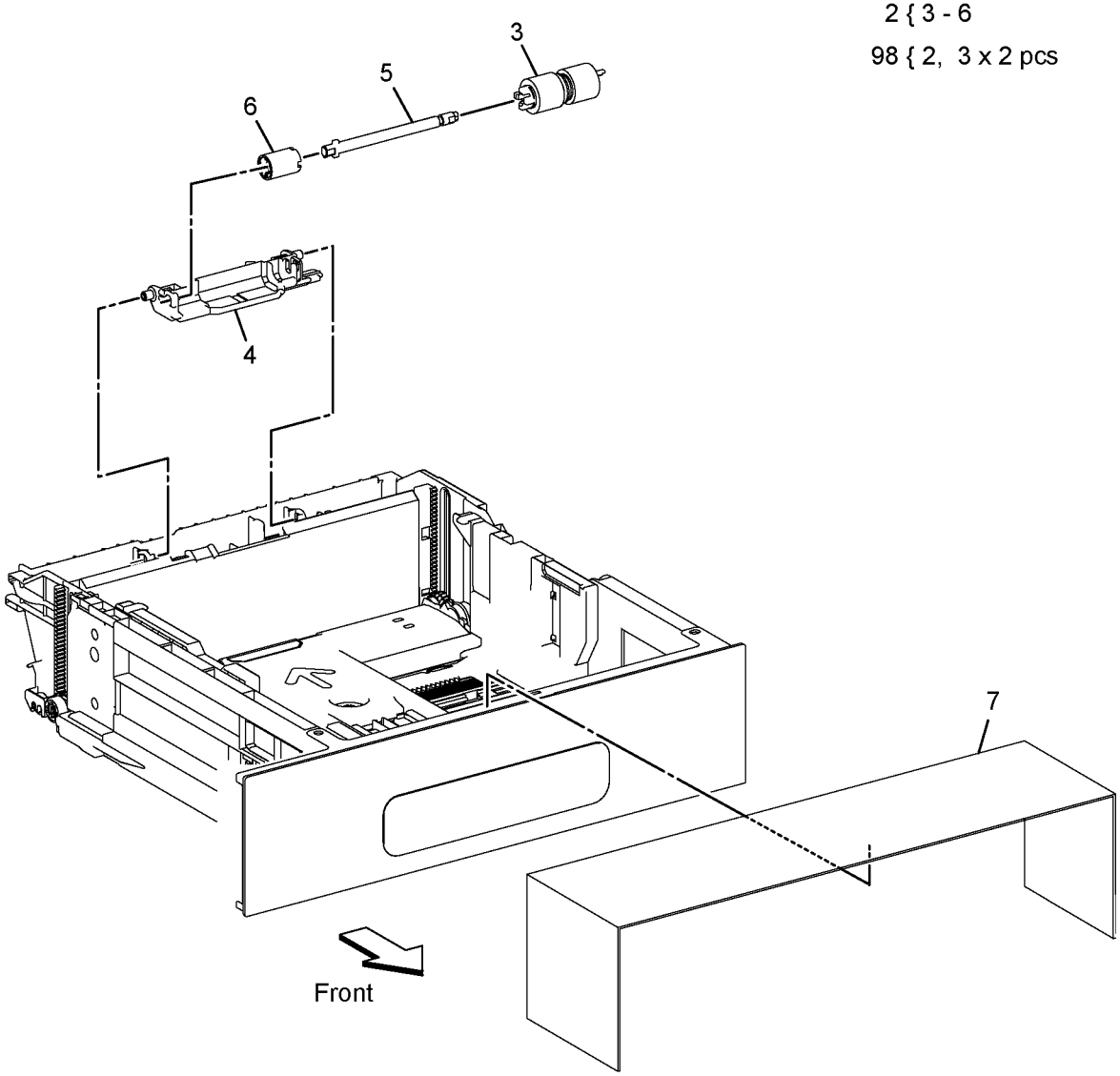

0510003A-SUR

PL 13.1 MSI (1/2)

Item	Part	Description
1	801K64710	MSI Frame Assy (With 2-8, 16-18)
2	–	MSI Frame
3	–	MSI Roll Core
4	–	MSI Feed Shaft Assy
5	059K89701	MSI Feed Roll
6	–	MSI Duplex Bearing
7	–	MSI Feed Solenoid (J482)
8	930W00123	Internal Photo Sensor (MSI No Paper Sensor)
9	–	TA1 Roll Assy
10	–	TA L Bearing
11	–	Turn Gear
12	–	TA3 AD Bearing
13	–	TA2 Gear
14	–	Right MSI Guide
15	–	MSI Upper Chute
16	–	MSI Guide Harness
17	–	MSI No Paper Bracket
18	–	MSI No Paper Harness Assy (J483-J484)
99	604K97990	Kit MSI Roll Assy TA2 (With 9-11, 13)

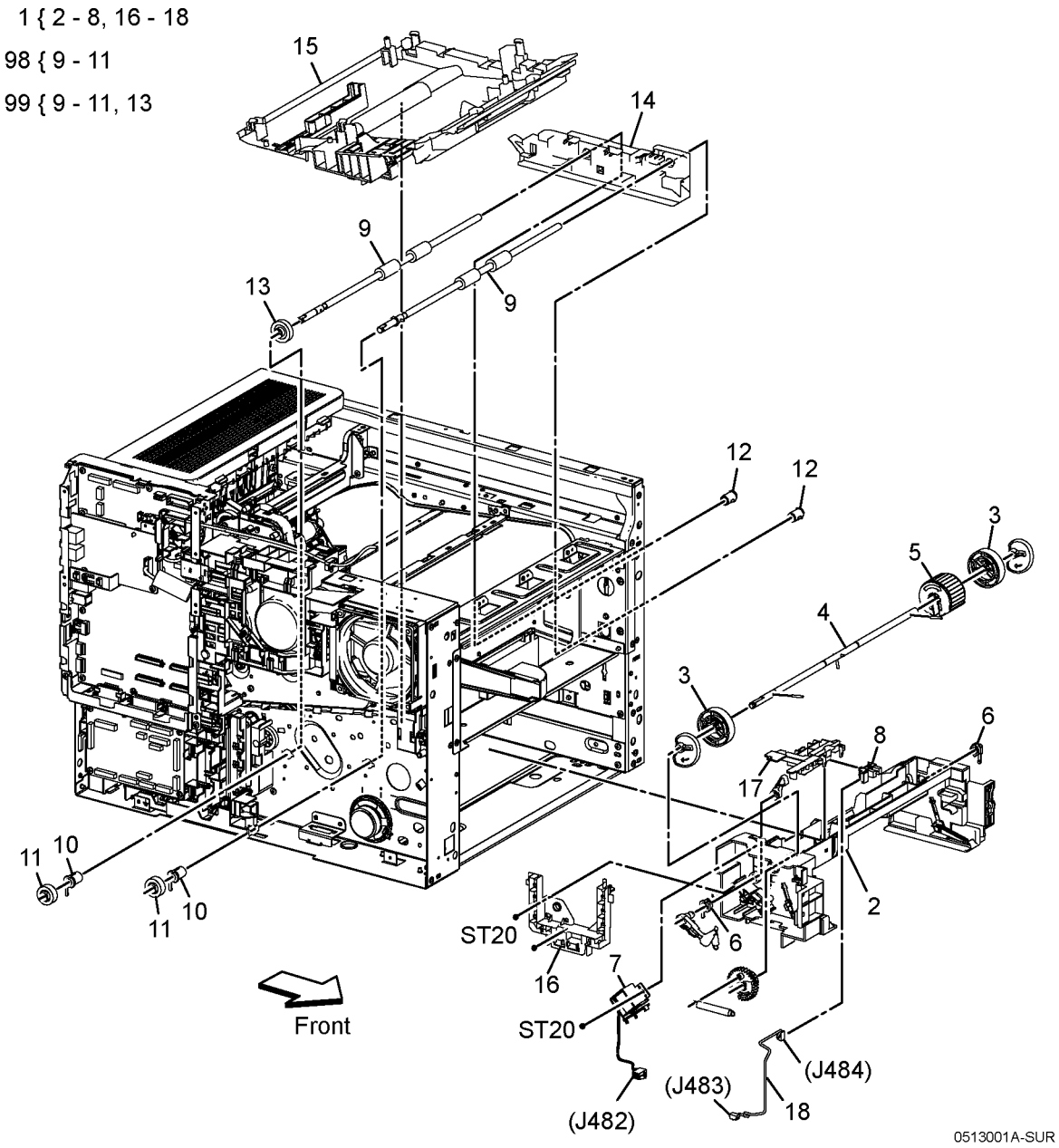

PL 13.2 MSI (2/2)

Item	Part	Description
1	050K73481	MSI Main Tray Assy (With 2-3)
2	–	MSI Cover Assy
3	–	MSI Chute Assy (With 4-15)
4	–	Chute MSI
5	607K04060	MSI Separator Holder Assy
6	–	MSI Front Bar
7	–	MSI No Paper Actuator
8	–	Spring No Paper MSI
9	–	Pinch Shaft TA
10	–	MSI Pinch Roll
11	–	MSI Pinch Spring
12	–	MSI Left Latch
13	–	MSI Right Latch
14	–	MSI Latch Spring
15	–	MSI Bottom Plate Assy

1 { 2 - 3

3 { 4 - 15

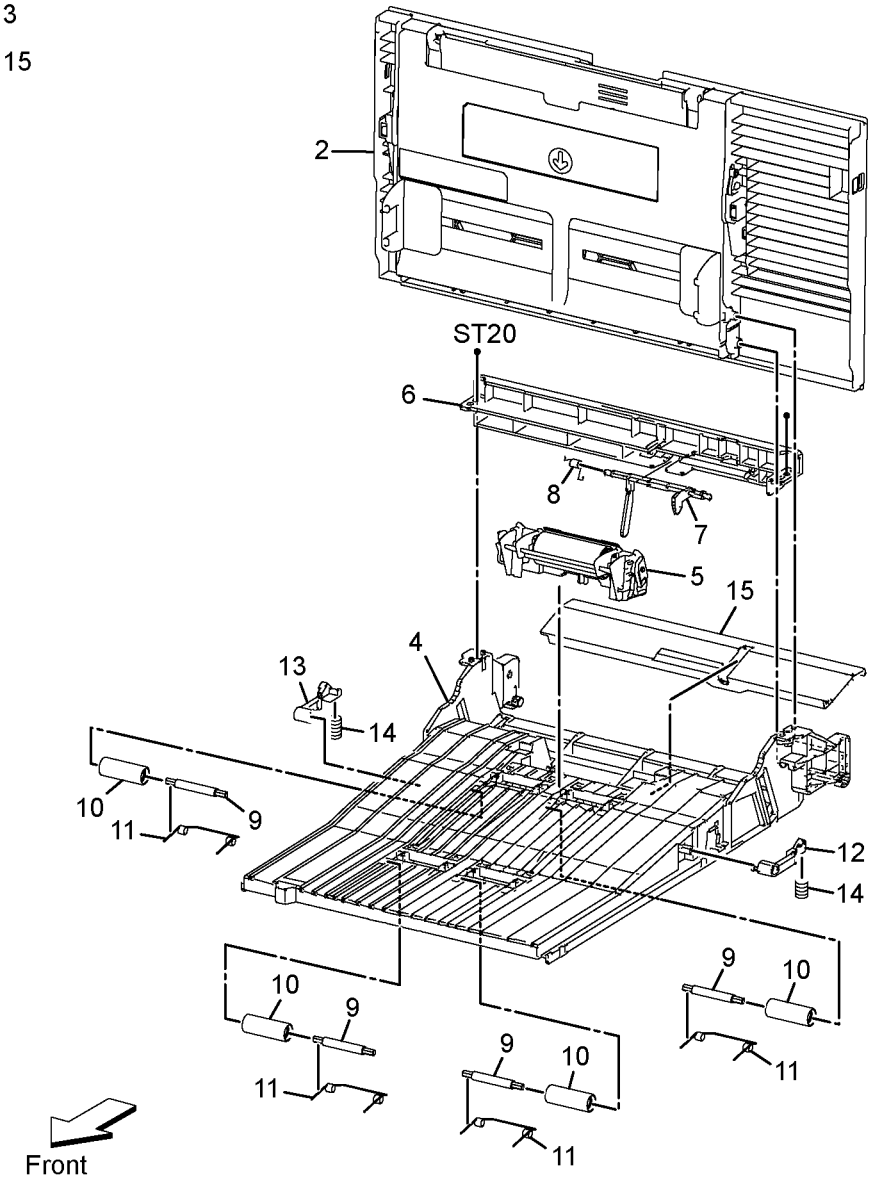

0513002A-SUR

PL 14.1 Duplex

Item	Part	Description
1	–	Duplex Assy
2	–	Release Arm Fuser AD
3	–	Release Arm Fuser D
4	–	Fuser Release Spring

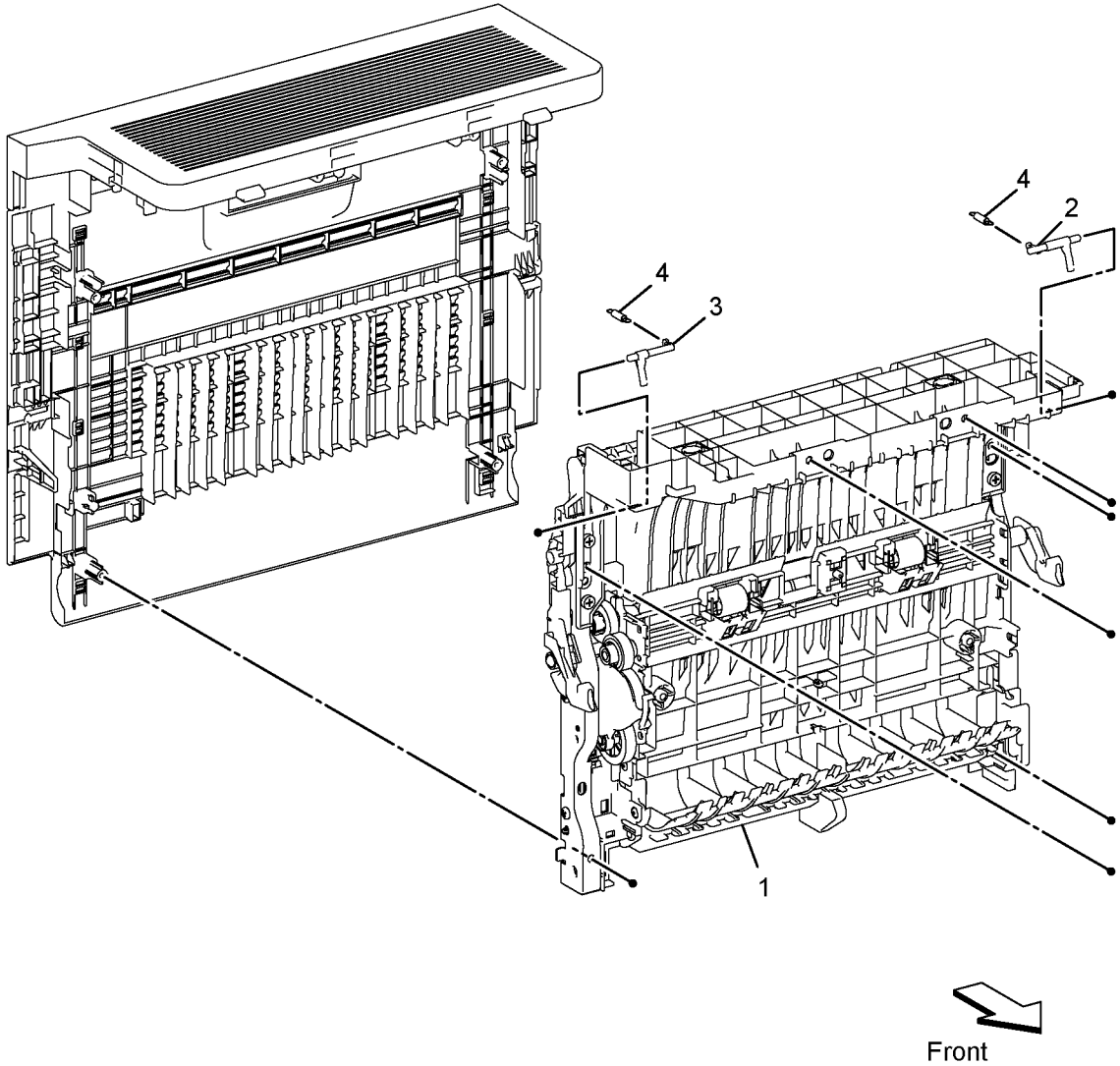

0514001A-SUR

PL 15.1 Registration (1/2)

Item	Part	Description
1	054E56460	Option 250 Chute
2	–	Chute Jam Label
3	–	Lower Duplex Chute
4	–	Feeder Chute
5	–	Duplex Gear Cover
6	–	Harness Assy Clutch Regi/Dup -C (J541B-J542, J543)
7	–	Gear CLT Regi
8	–	Registration Clutch Assy (SCC)
9	–	One Way Gear Assy
10	–	Upper Duplex Chute
11	–	Registration Bracket Assy D (SCC)
12	–	Registration Pinch Bearing AD
13	–	Registration Bearing AD
14	–	Registration Roll Assy
15	–	Registration Bearing D
16	–	Registration Spring
17	–	Registration Bracket Assy AD
18	–	Registration Pinch Bearing D
19	–	Registration Pinch Out Roll
20	–	Registration Pinch Spacer
21	–	Registration Pinch In Roll
22	–	Registration Pinch Shaft
99	604K98121	Kit Roll Assy Dup Regi (With 6-9, 11-22, 2 E-rings)

99 { 6 - 9, 11 - 22, 2-Erings

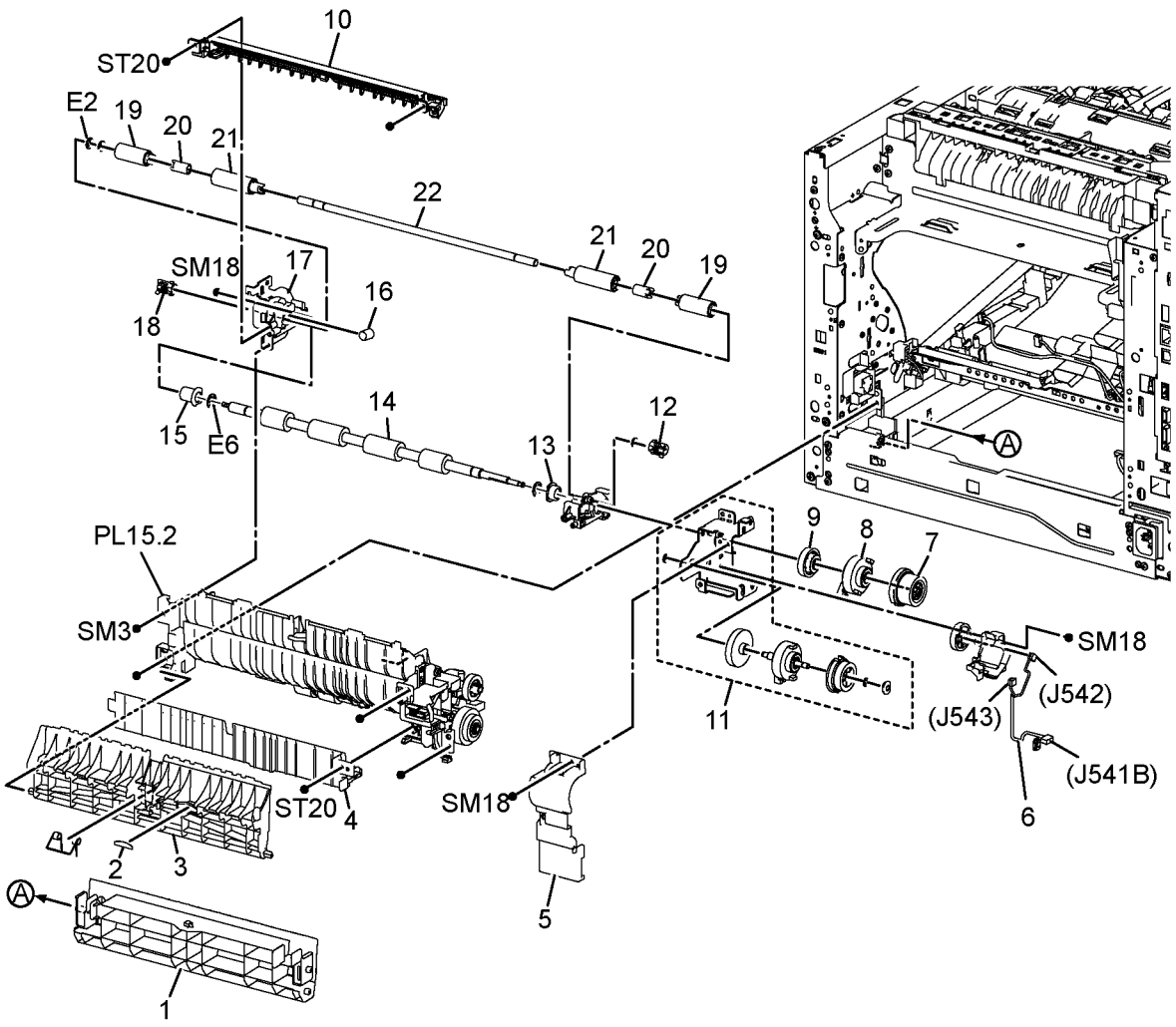

0515001A-SUR

PL 15.2 Registration (2/2)

Item	Part	Description
1	054K56930	Registration Feeder Chute Assy (SCC) (With 2-22)
2	120E35551	No Paper Actuator
3	–	Registration Chute
4	–	Pinch Roll TA
5	–	Pinch Spring TA
6	–	Pinch Shaft TA
7	–	Roll Assy TA3
8	–	Bearing TA3 D
9	–	Bearing TA3 AD
10	–	Gear TA3
11	120E35530	Registration Actuator
12	–	Registration Spring Actuator
13	930W00123	Photo Sensor Int (Regi Sensor)
14	–	Registration Upper Chute
15	–	Clutch Assy PH
16	859K00100	Feed Roll Assy
17	054E60150	Upper Feed Chute
18	–	Harness Assy SNR Regi/NO (J545B-J546, J547)
19	–	Harness Assy Clutch Feed (J544B-J548)
20	–	Feed Plate Earth
21	–	Earth Plate TA3
22	–	Photo Sensor Int (No Paper Sensor)
98	607K00050	Kit Feed and Separator Roll (with 16 x 2 pcs, PL 9.1.2)

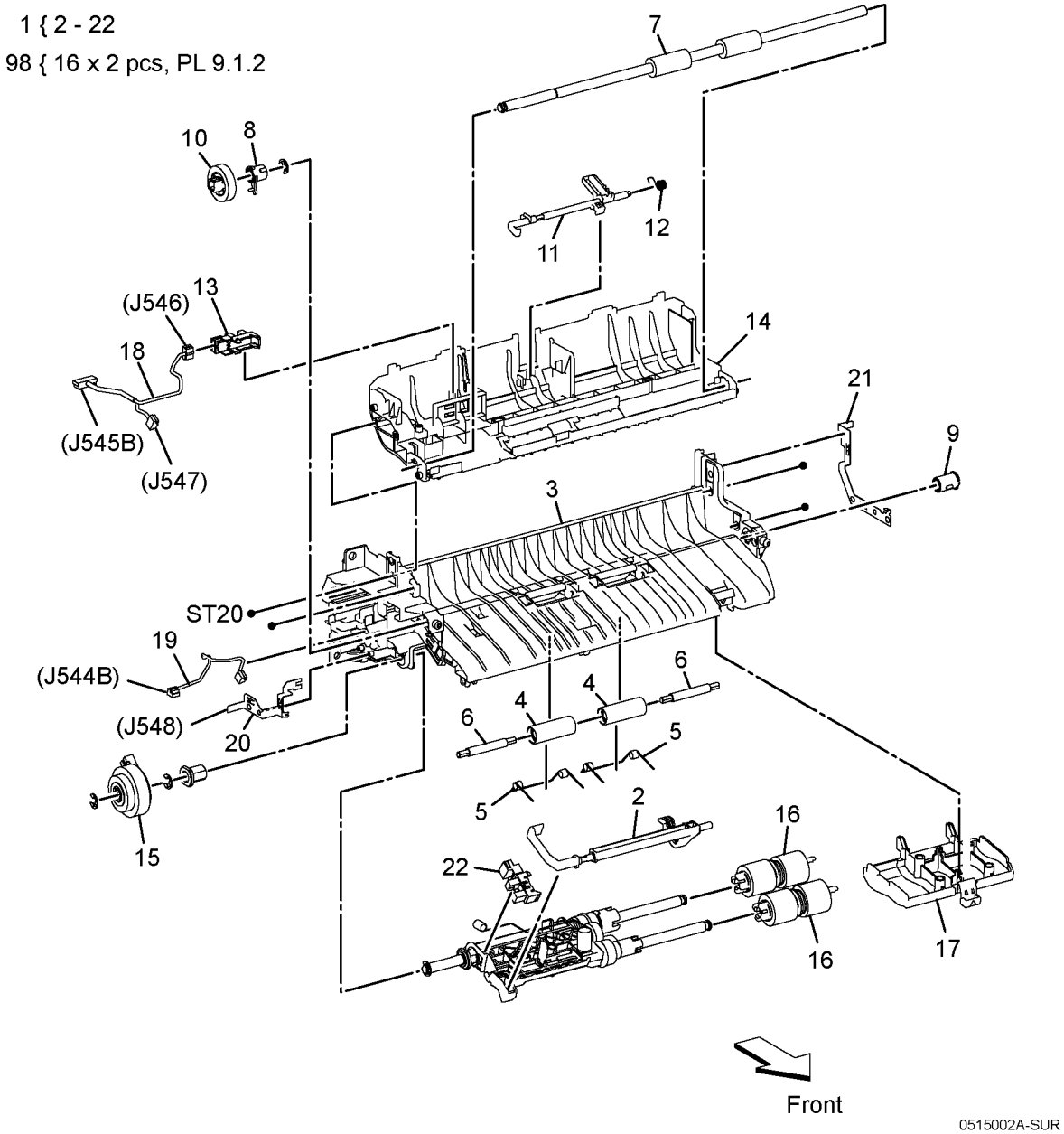

PL 17.1 Exit

Item	Part	Description
1	054K56411	Exit Chute Assy (With 2-3)
2	–	Pinch Roll
3	–	Pinch Cover
4	007K22090	Exit Main Drive Assy (SCC)
5	007K21391	Idle Exit Gear Assy
6	–	Chute Exit

1 { 2, 3, 6

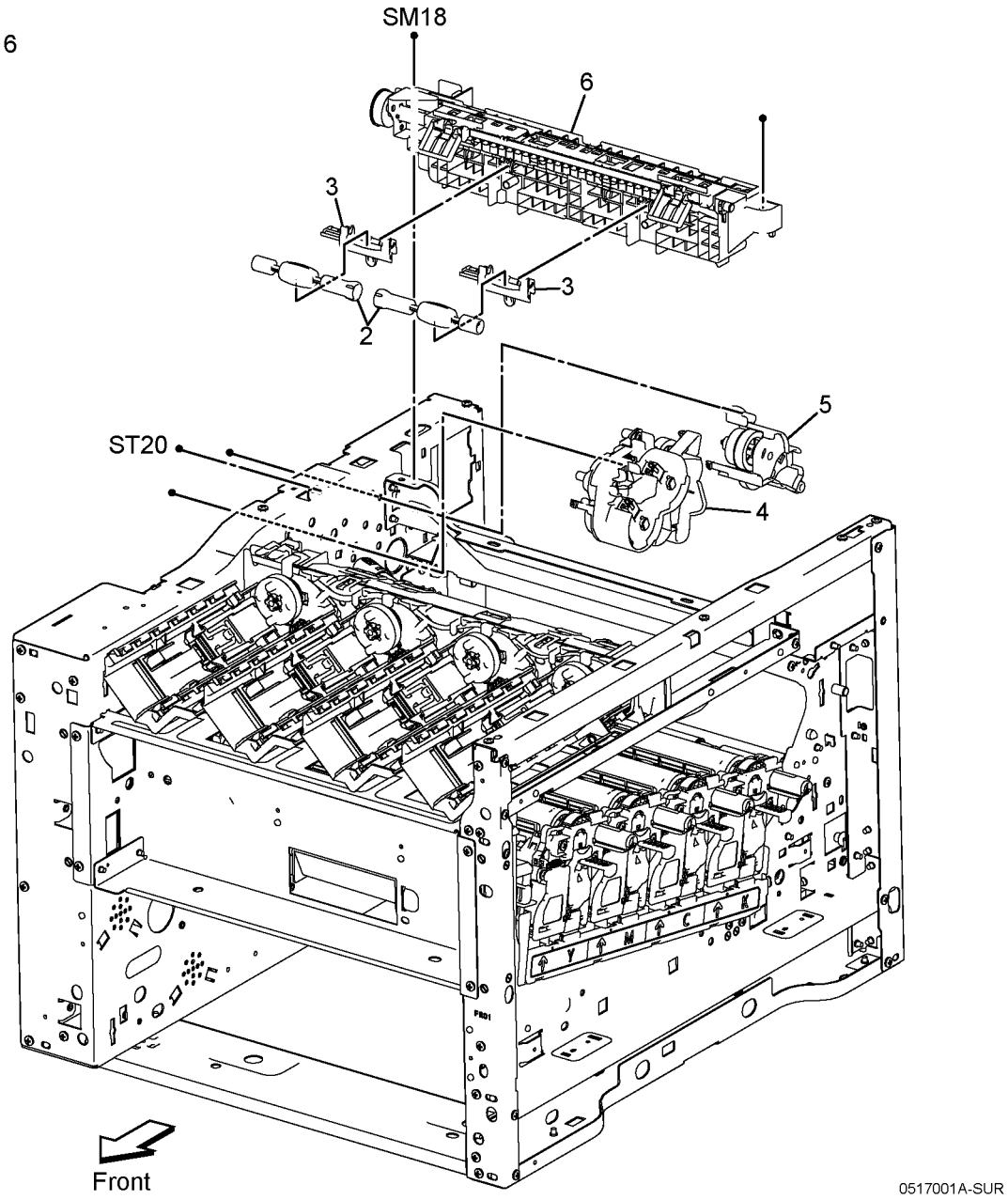

PL 18.1 Electrical MFP (1/4)

Item	Part	Description
1	960K87210	MCU PWBA (SCC)
2	952K22010	ESS MCU FFC Cable
3	–	FFC Color MCU Guide
4	–	Core MCU
5	607K00103	ESS PWBA (SCC) (ISC)
6	–	Fax Plate Assy
7	–	FFC Color LPH Guide
8	–	ESS Low Plate
9	960K80761	PWBA Fax (SCC)
10	–	Fax Harness Assy (SCC)
11	–	Wireless Module
12	–	
13	–	
14	952K33741	Front USB Harness Assy (J1337-USB J1)
15	–	A4 Fax Speaker Assy (J356) (ACO)
16	105K31081	LVPS PWBA 110V (SCC)
–	105K31091	LVPS PWBA 220V (SCC)
17	–	
18	–	ESS Top Plate
19	–	ESS Box MFP
20	–	LVPS Low Plate
21	–	MCU Plate
22	–	Drive PH Housing
23	–	ESS Harness Guide
24	–	Fax Cover
25	–	Core
26	–	WiFi Link
27	–	
28	–	
29	–	Main Speaker (J4)
30	–	EMMC Board

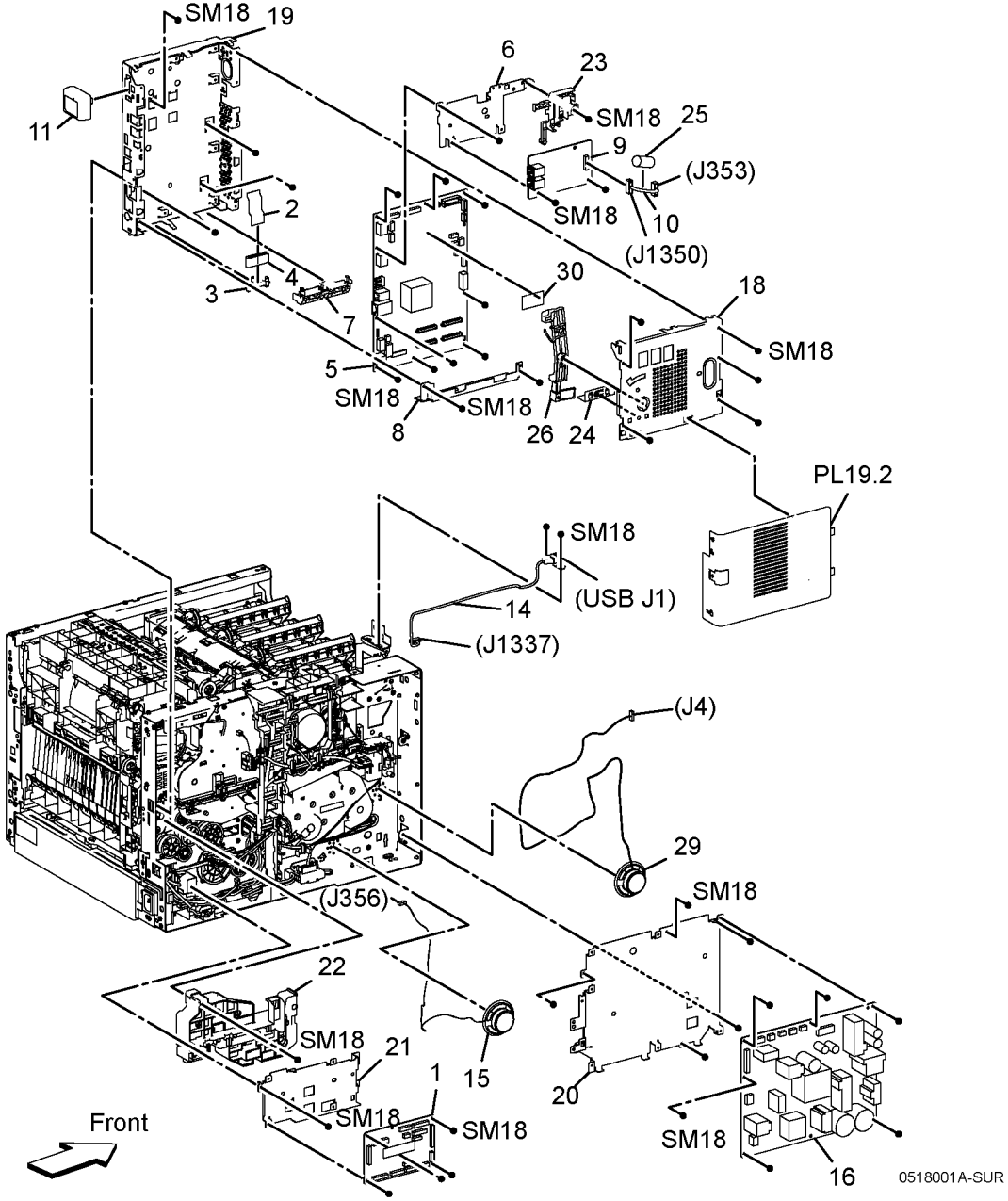

PL 18.2 Electrical MFP (2/4)

Item	Part	Description
1	032K10622	HVPS Guide Assy (With 2)
2	–	HVPS PWBA (SCC) (P/O PL 18.2 Item 1)
3	822E21972	HVPS Toner Cover
4	–	Bias Transfer Roll 2nd Housing
5	–	Bias Transfer Roll 2nd Bias Plate
6	–	1st K Supply Harness Assy (J501)
7	–	1st YMC Supply Harness Assy (J502)
8	–	Trans Supply Harness Assy (T601)
99	604K97510	Kit 2nd Bias Transfer Roll Housing (With 4-5)

99 { 4, 5

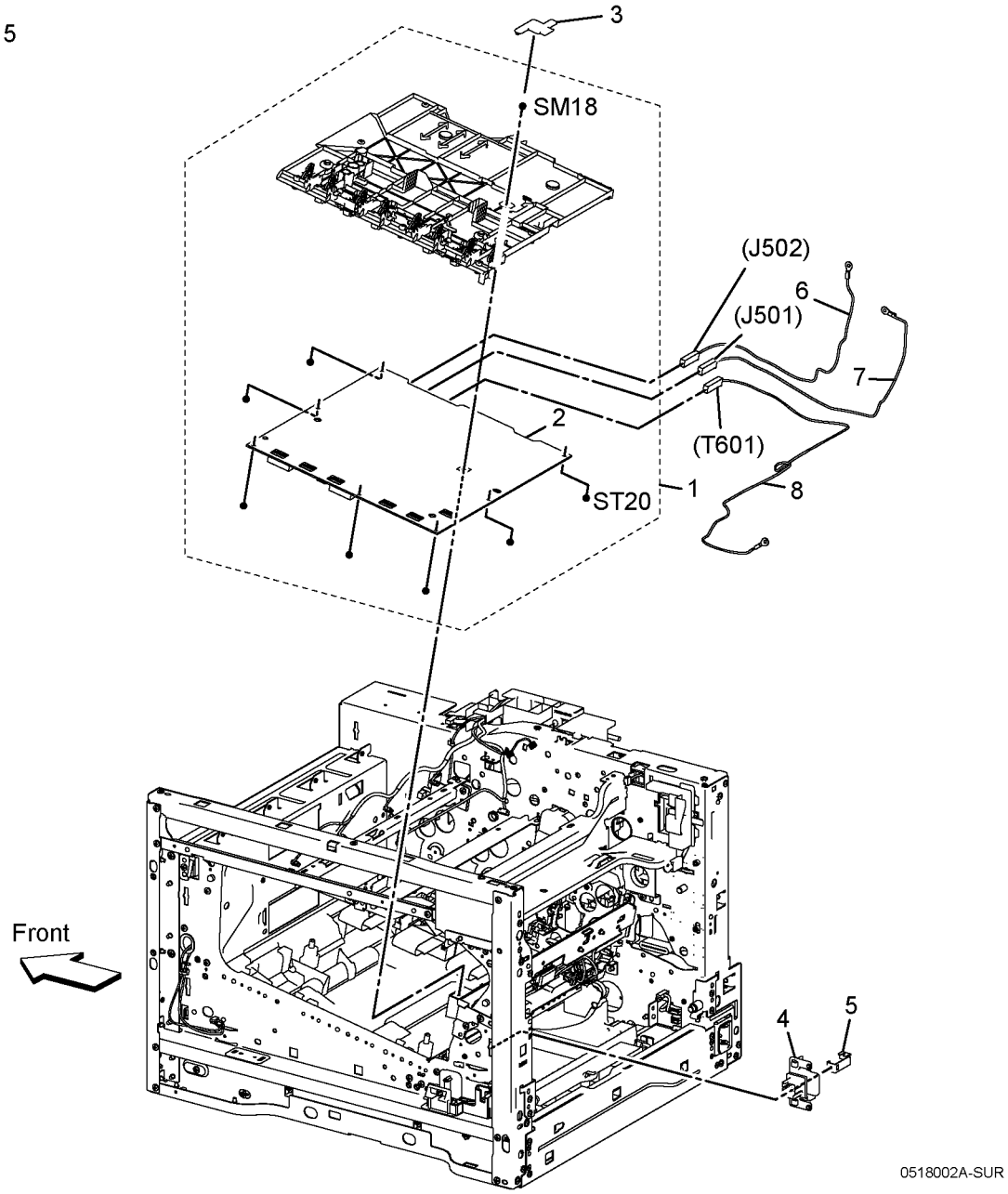

PL 18.3 Electrical MFP (3/4)

Item	Part	Description
1	604K97501	AC Inlet Harness Assy
2	–	Fuser Harness DC (J270-J272, J273)
3A	–	Fuser Harness (AC) 110VAC
3B	–	Fuser Harness (AC) 220VAC
4	952K21870	Rear Interlock Harness Assy (SW-J292)
5	952K21860	Side Interlock Harness Assy (SW-J291)
6	952K21990	OPF Harness Assy (J800-DP801A)
7	–	Power Cord (SCC)
8	–	Fuser Harness Guide
9	–	DC Harness Guide
10	–	Duct Harness Guide
11	–	Interlock Harness Guide

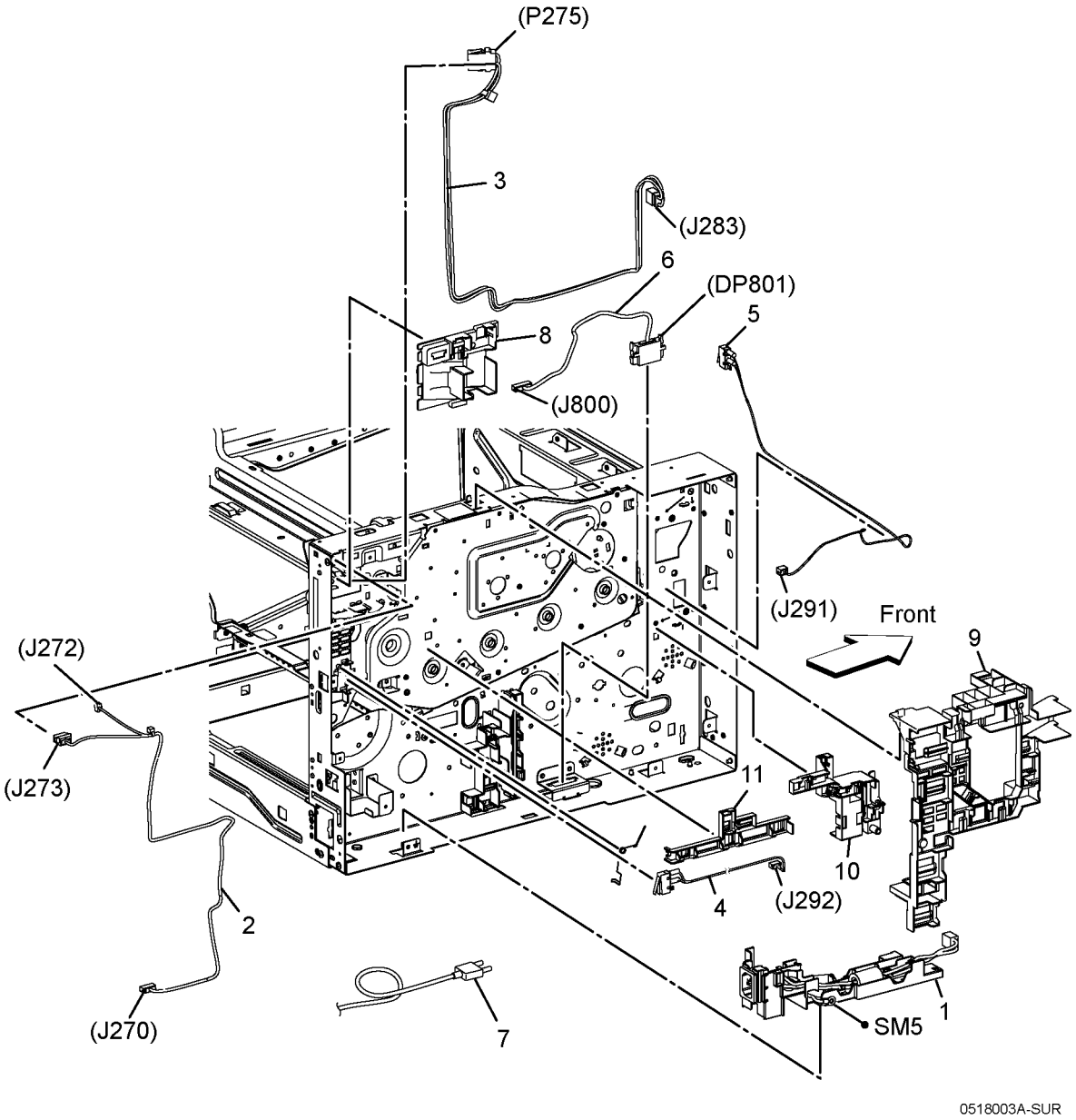

PL 18.4 Electrical MFP (4/4)

Item	Part	Description
1	–	ESS-PWR-C Harness Assy (J287-J301)
2	–	MCU-HVPS-C Harness Assy (J100-J1001)
3	–	Motor Harness Assy (SCC) (J288-J572, J574)
4	–	MCU-MOT-C Harness Assy (J570-J571, J573)
5	–	LV MCU Harness Assy (J280-J284)
6	–	
7	–	SNR DEVE/XERO-C Harness Assy (J467B-J465)
8	–	MSI CL Harness Assy (J480-J482A, J483A, J485)
9	–	
10	–	Regi -C Harness Assy (J540-J541A, J544A, J545A)
11	–	Toner CRUM Harness Assy (J110-J111-J112-J113-J114)
12	–	Deve CL Harness Assy (J460-J468A, J467A, J461, J462, J463A, J464A)
13	–	K-SNR-C Harness Assy (J468B-J466)
14	–	SNR Deve/Xero-C Harness Assy (J467B-J465)

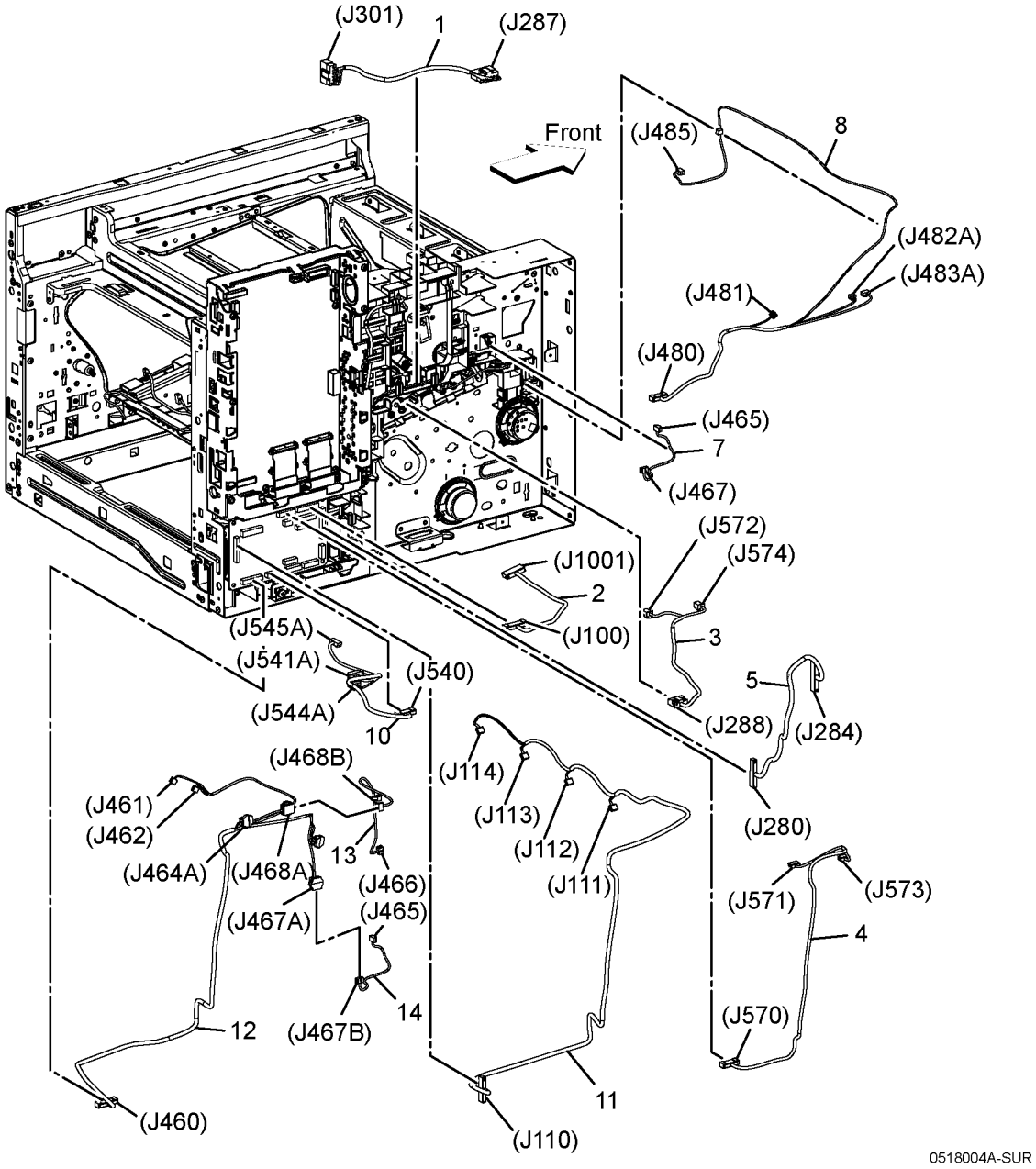

PL 18.5 Electrical SFP (1/4)

Item	Part	Description
1	960K87210	MCU PWBA (SCC)
2	952K22010	MCU ESS FFC Cable
3	–	MCU FFC Color Guide
4	–	MCU Core
5	607K00113	PWBA ESS SFP (SCC) (ISC)
6	–	
7	–	LPH FFC Color Guide
8	–	ESS Low Plate
9	–	
10	–	
11	–	Wireless Module
12	–	
13	–	
14	–	
15	–	
16	105K33011	PWBA LVPS 220V
–	105K33001	PWBA LVPS 110V (SCC)
17	–	
18	–	ESS Top Plate
19	–	ESS Box SFP
20	–	LVPS Plate
21	–	MCU Plate
22	–	PH Drive Housing
23	–	
24	–	
25	–	
26	–	WiFi Link
27	–	
28	–	
29	–	
30	–	EMMC Board

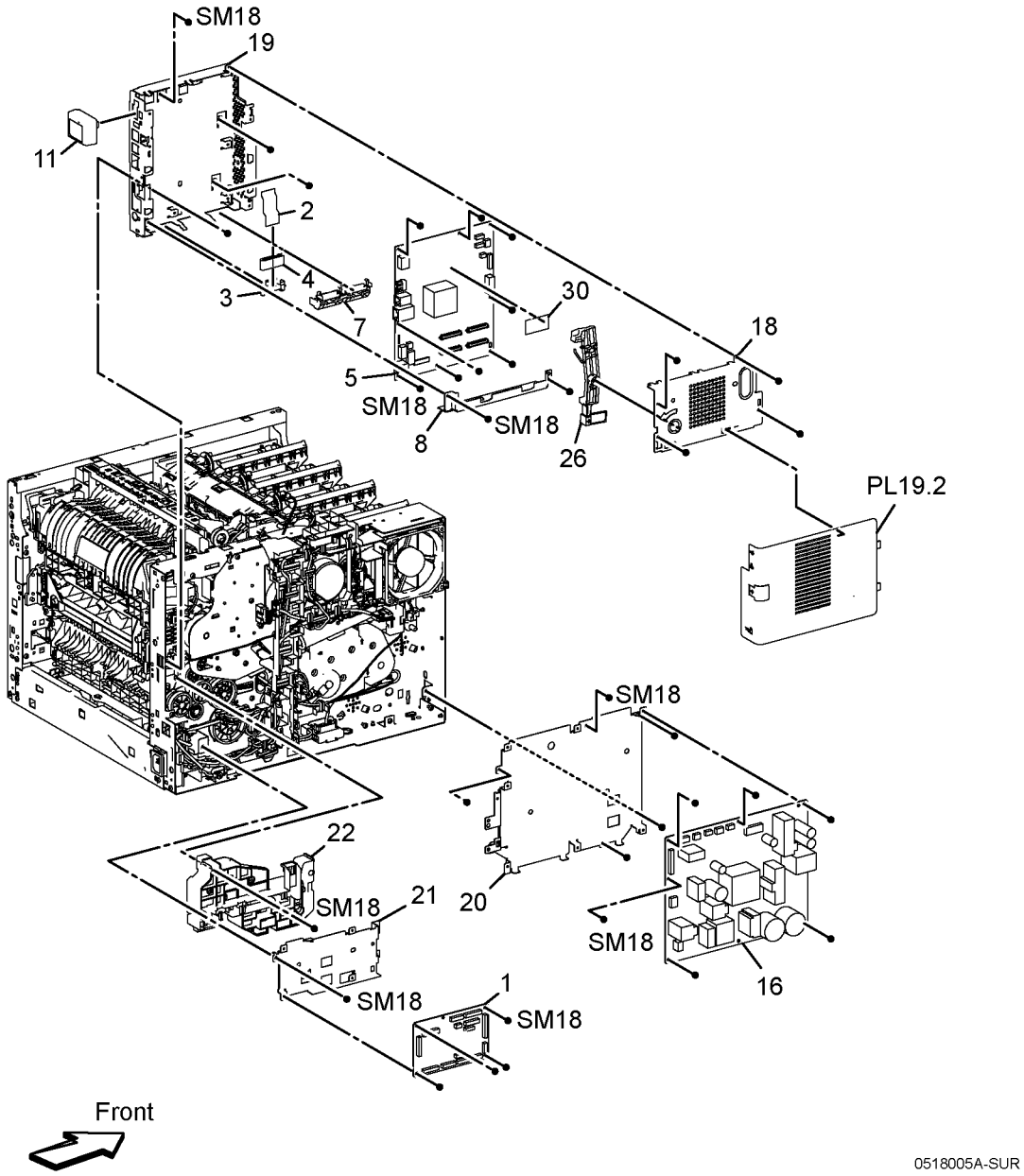

PL 18.6 Electrical SFP (2/4)

Item	Part	Description
1	032K10622	HVPS Guide Assy (With 2)
2	–	HVPS PWBA (SCC) (P/O PL 18.6 Item 1)
3	822E21972	HVPS Toner Cover
4	–	Bias Transfer Roller 2nd Housing
5	–	Bias Transfer Roller 2nd Bias Plate
6	–	1st K Supply Harness Assy (J501)
7	–	1st YMC Supply Harness Assy (J502)
8	–	Trans Supply Harness Assy (T601)
99	604K97510	Kit 2nd Bias Transfer Roll Housing (With 4-5)

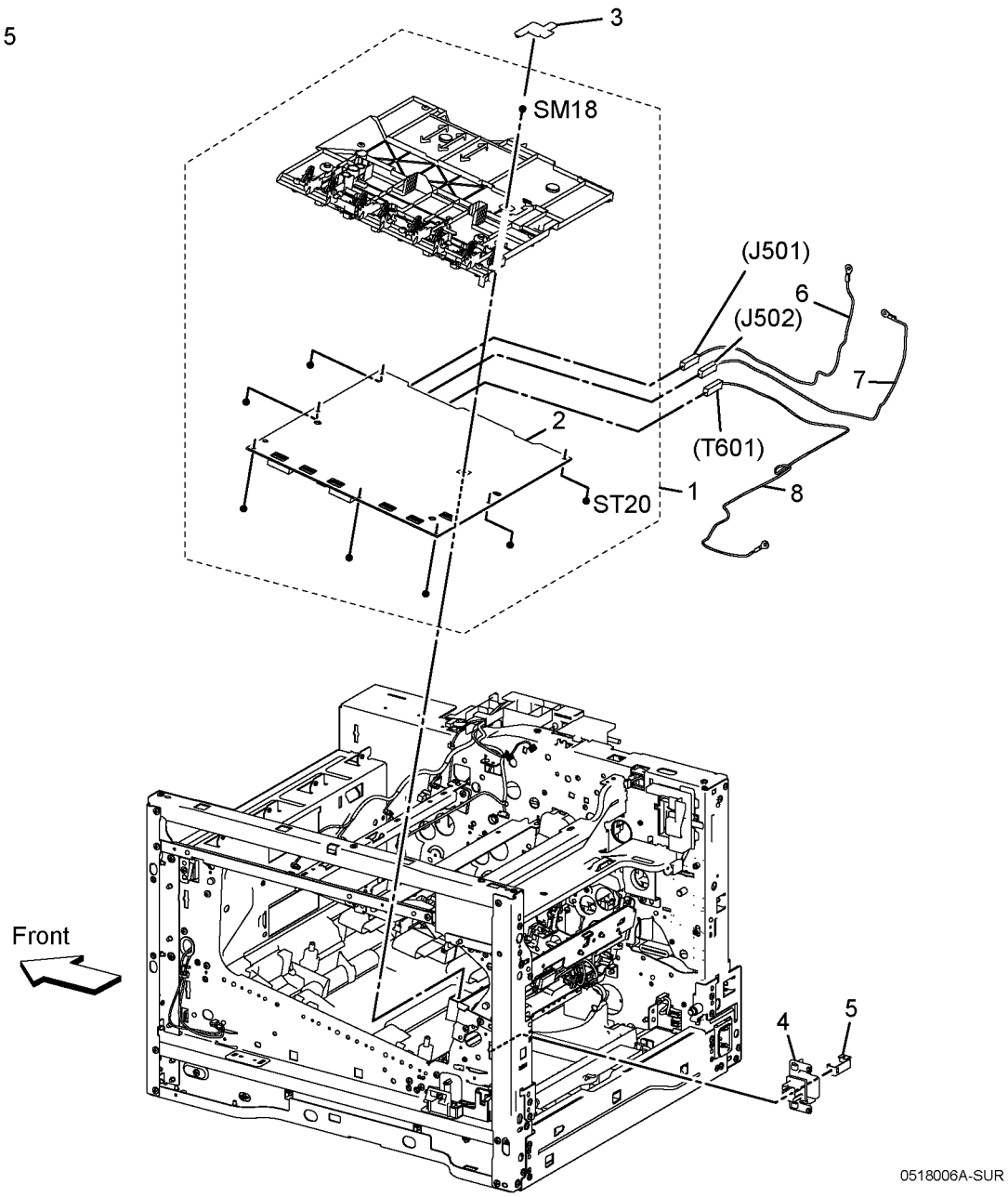

PL 18.7 Electrical SFP (3/4)

Item	Part	Description
1	604K97501	AC Inlet Harness Assy
2	–	Fuser Harness (DC) (J270-J272, J273)
3	–	AC Fuser Harness (J283-P275)
3A	–	Fuser Harness (AC) 110VAC
3B	–	Fuser Harness (AC) 220VAC
4	952K21870	Rear Interlock Harness Assy (SW-J292)
5	952K21860	Side Interlock Harness Assy (SW-J291)
6	952K21990	OPF Harness Assy (J800-DP801A)
7	–	Power Cord (SCC)
8	–	Fuser Harness Guide
9	–	DC Harness Guide
10	–	Duct Harness Guide
11	–	Interlock Harness Guide

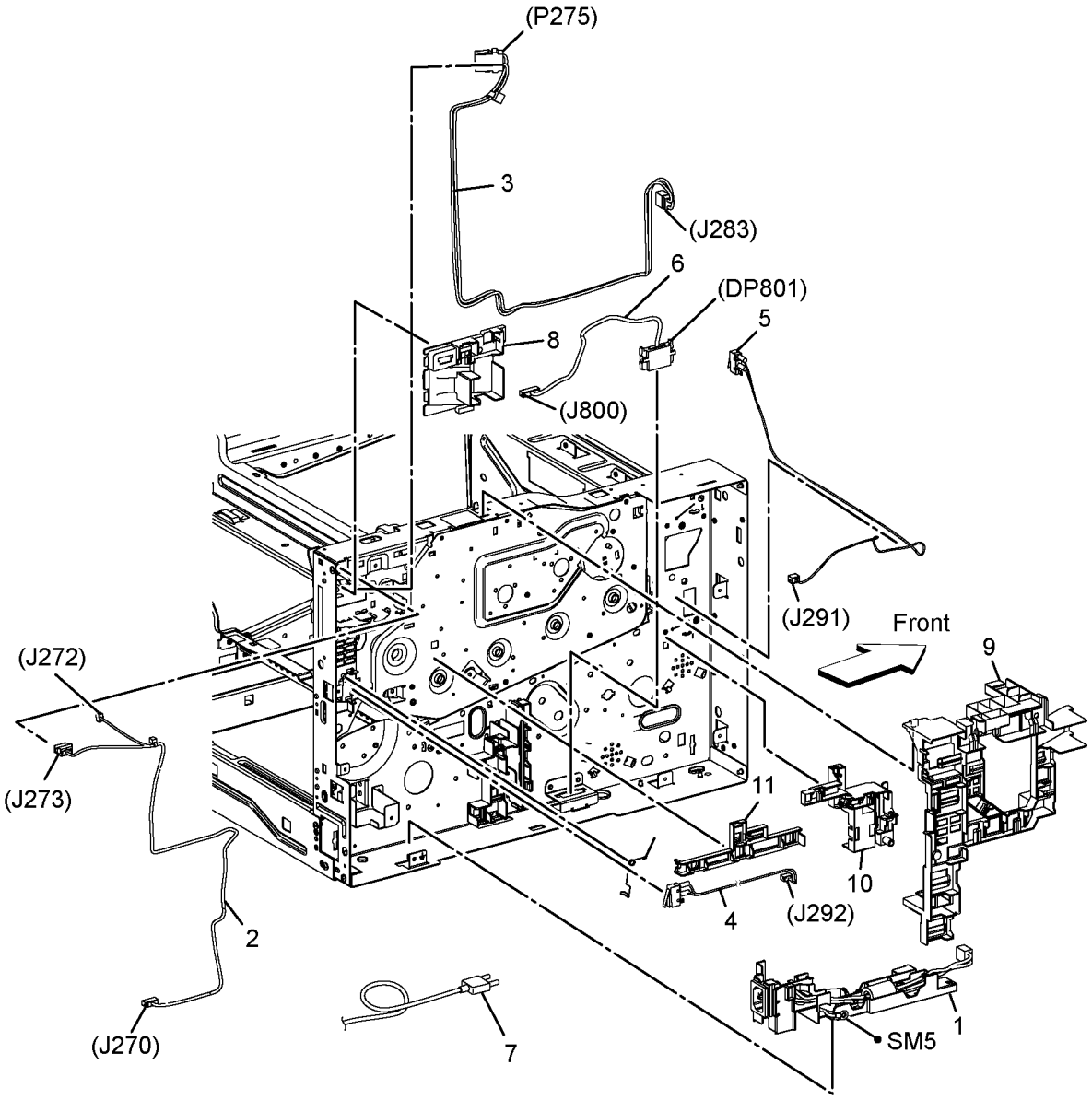

PL 18.8 Electrical SFP (4/4)

Item	Part	Description
1	–	ESS-PWR-C Harness Assy (J287-J301)
2	–	MCU-HVPS-C Harness Assy (J100-J1001)
3	–	Motor Harness Assy (SCC) (J288-J572, J574)
4	–	MCU-MOT-C Harness Assy (J570-J571, J573)
5	–	LV MCU Harness Assy (J280-J284)
6	–	
7	–	SNR DEVE/XERO-C Harness Assy (J467B-J465)
8	–	MSI CL Harness Assy (J480-J482A, J483A, J485)
9	–	
10	–	Regi -C Harness Assy (J540-J541A, J544A, J545A)
11	–	Toner CRUM Harness Assy (J110-J111-J112-J113-J114)
12	–	Deve CL Harness Assy (J460-J468A, J467A, J461, J462, J463A, J464A)
13	–	K-SNR-C Harness Assy (J468B-J466)
14	–	SNR Deve/Xero-C Harness Assy (J467B-J465)

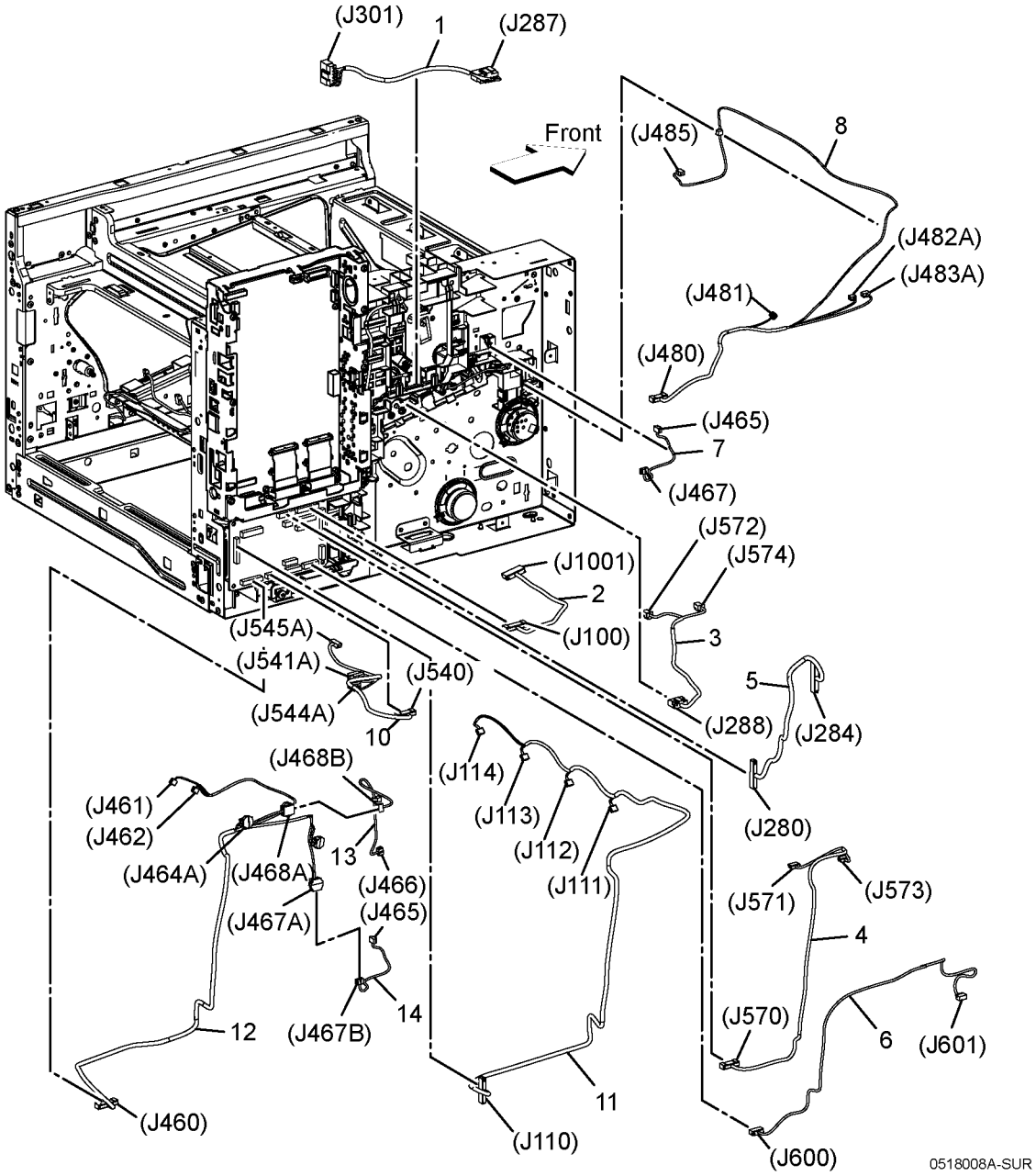

PL 19.1 Cover MFP (1/2)

Item	Part	Description
1	–	Toner Cover
2	–	
3	–	
4	–	Logo
5	948K07510	Front Inner Cover
6	–	Left Inner IIT Cover
7	–	Rear Left Inner IIT Cover
8	–	Right Side Cover
9	–	
10	–	Right Inner IIT Cover
11	–	Waste Cover
12	–	Waste Cover Strap
13	–	Link Waste
14	–	Waste Link Spring
15	–	Top Cover
16	–	Exit Cover
17	–	Extension Tray
18	–	Sub Extension Tray
19	–	Interlock Holder
20	–	Interlock Actuator
21	–	Interlock Spring
22	822E27562	Front Left Cover
23	822E27532	Front Right Cover
96	948K07540	Toner Cover Assy (With 1, 4)
97	948K07581	Right Side Cover Assy (With 8, 13, 14, 98)
98	–	Waste Cover Assy (With 11, 12x2, 19-21)
99	948K00732	Top Cover Assy (With 6, 10, 15-18)

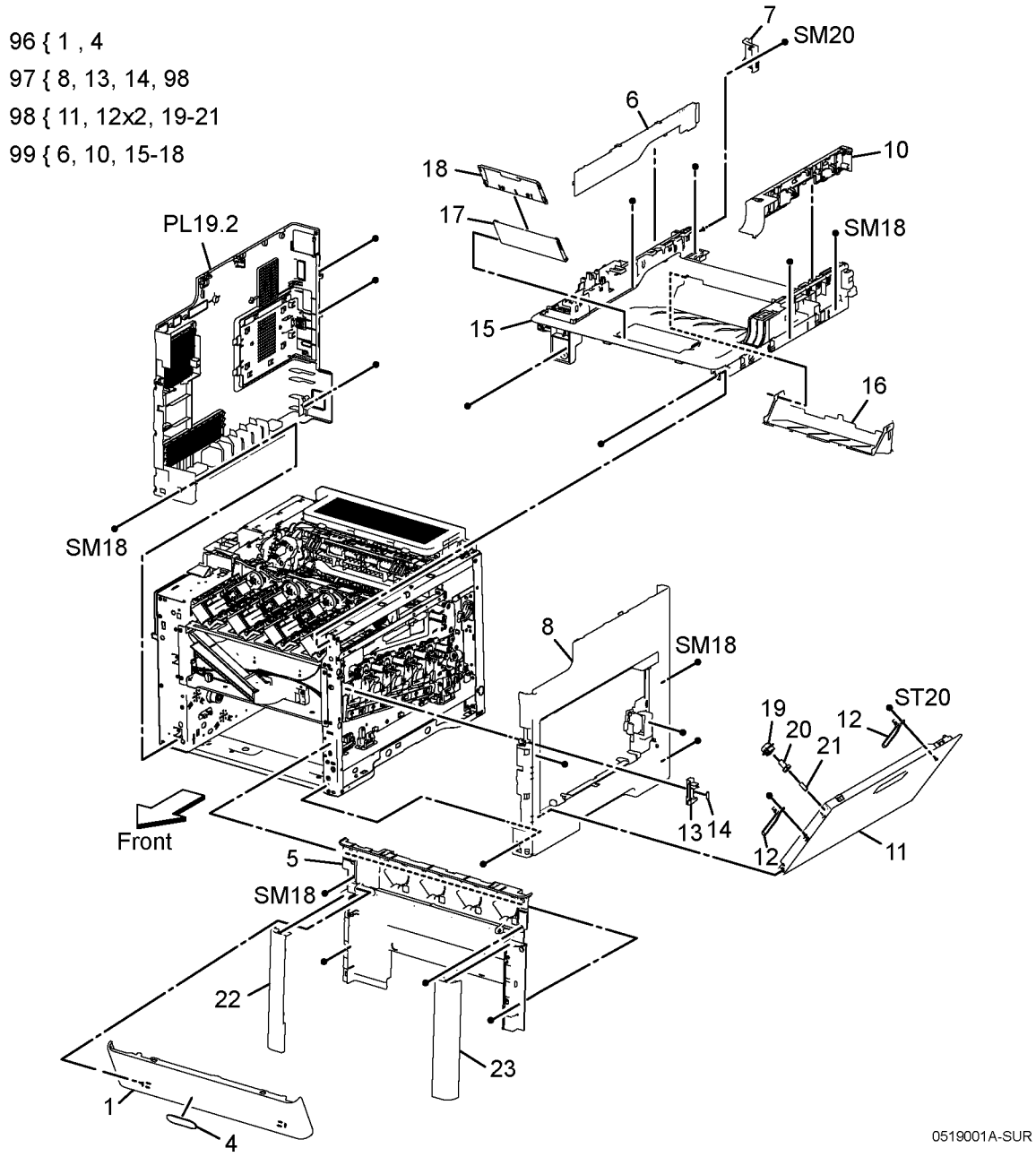

PL 19.2 Cover MFP (2/2)

Item	Part	Description
1	822E27663	Left Side Cover
2	–	
3	–	
4	822E27672	Left Side IIT Cover
5	–	
6	–	
7	–	Rear Cover Strap
8	–	Rear Left Hinge Assy (ACO)
9	–	Rear Right Hinge Assy
10	–	Rear Bottom Cover
11	607K04070	2nd Bias Transfer Roller Assy
12	–	Rear Cover Assy
13	–	ESS Window
14	–	ESS Window Plate
15	–	ESS Window Lever
16	822E27572	Wifi Cap
98	815K16400	Kit ESS Window Assy (With 13-15)
99	607K00480	Kit Rear Cover Assy MFP (with 7x2, 12, PL14.1)

98 { 13 - 15

99 { 7 x 2 pcs, 12, PL 14.1

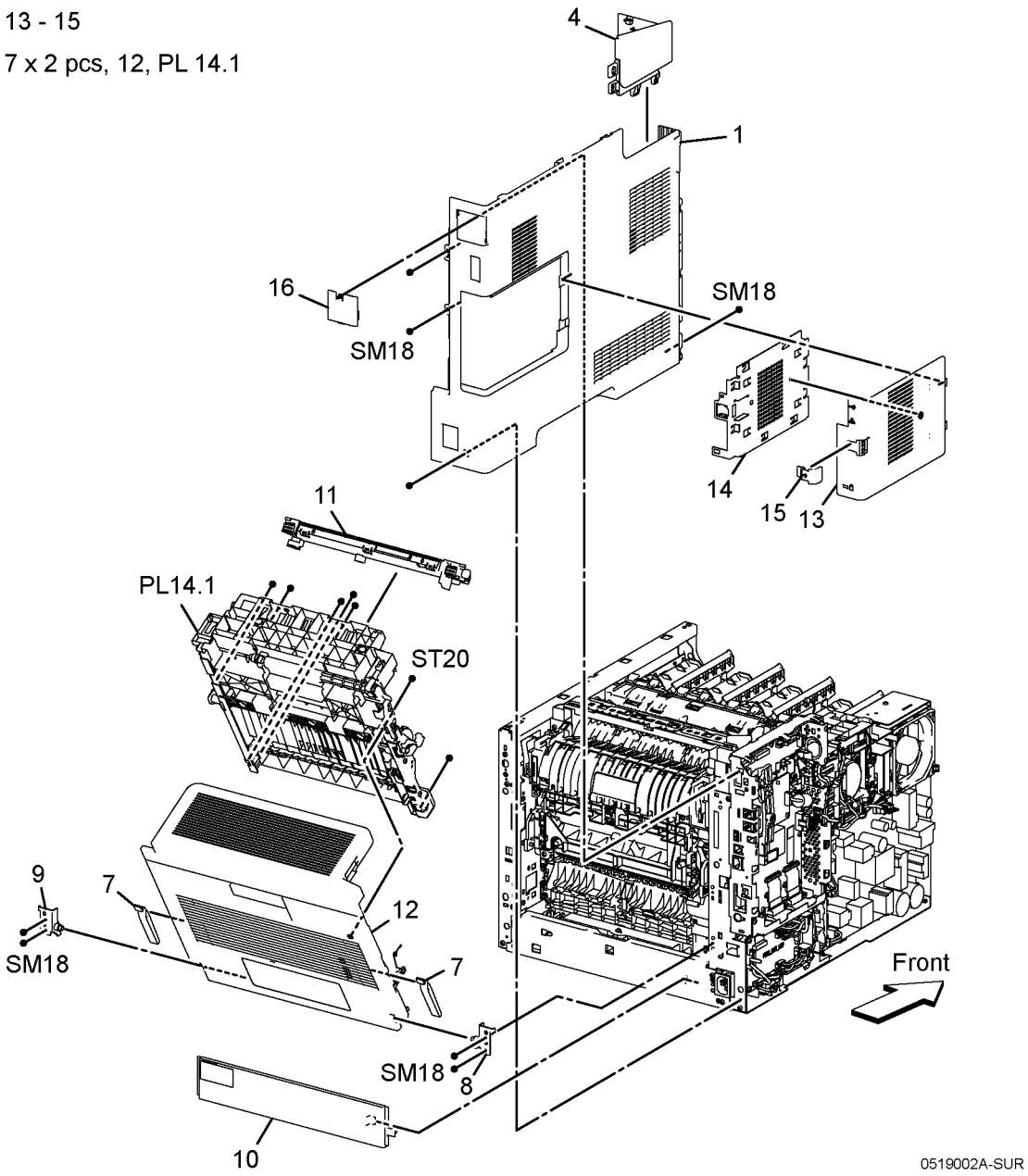

PL 19.3 Cover SFP (1/2)

Item	Part	Description
1	–	Toner Cover
2	–	Top Toner Cover
3	–	
4	–	Logo
5	948K07500	Front Inner Cover
6	–	
7	–	
8	–	Right Side Cover
9	–	
10	–	
11	–	Waste Cover
12	–	Waste Cover Strap
13	–	Link Waste
14	–	Waste Link Spring
15	–	Top Cover
16	–	Exit Cover
17	–	Extension Tray
18	–	Sub Extension Tray
19	–	Interlock Holder
20	–	Interlock Actuator
21	–	Interlock Spring
22	822E27562	Front Left Cover
23	822E27532	Front Right Cover
24	822E40820	Rear Left Top Cover
25	822E22242	Rear Right Top Cover
96	–	Toner Cover Assy (With 1, 2, 4)
97	948K07551	Right Side Cover Assy (With 8, 13, 14)
98	–	Waste Cover Assy (With 11, 12x2-19-21)
99	948K00742	Top Cover Assy (With 15-18)

96 { 1 , 2, 4

97 { 8, 13, 14

98 { 11, 12x2, 19 - 21

99 { 15 - 18

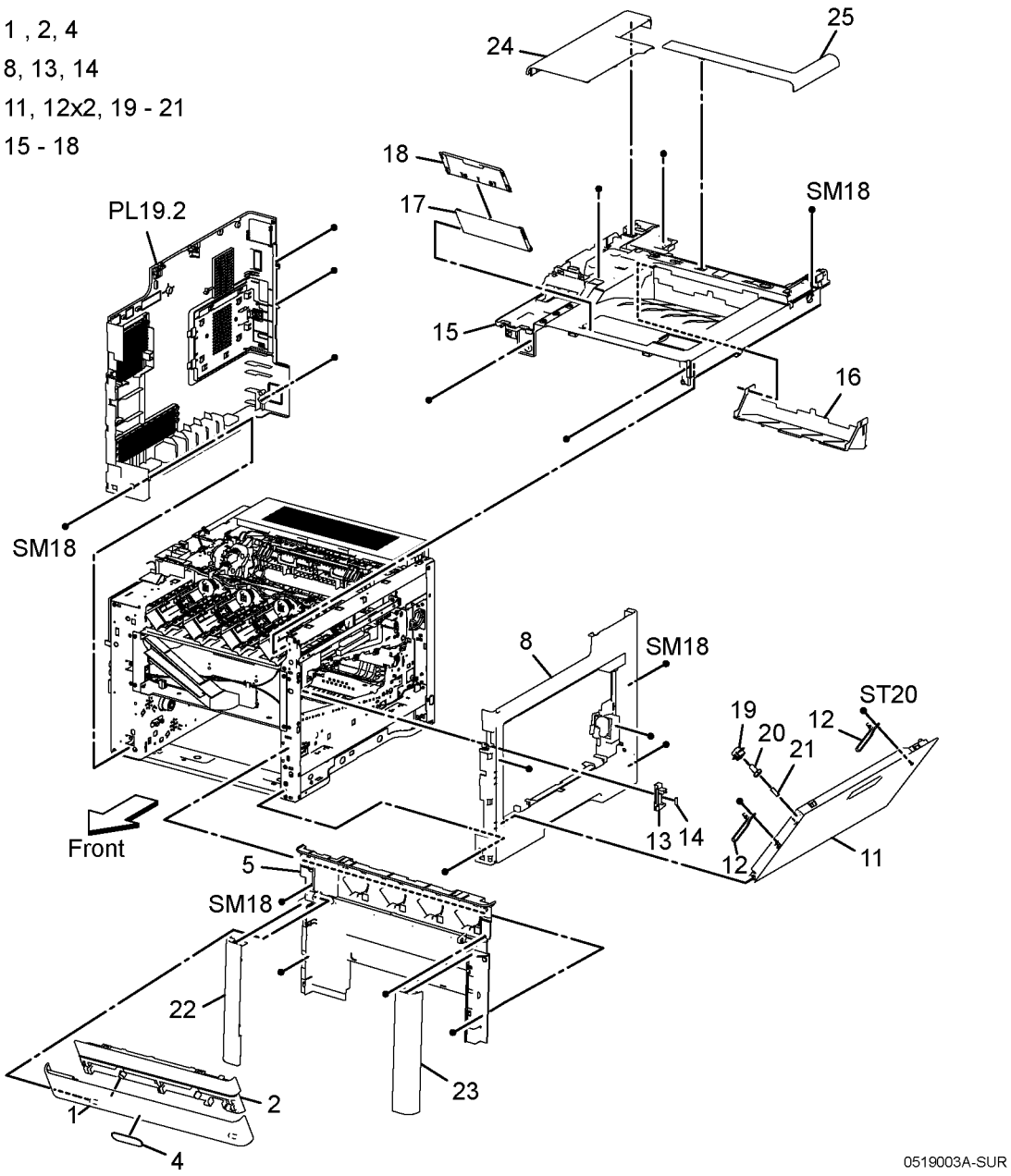

PL 19.4 Cover SFP (2/2)

Item	Part	Description
1	822E27554	Left Side Cover
2	–	
3	–	
4	–	
5	–	
6	–	
7	–	Rear Cover Strap
8	–	Rear Left Hinge Assy
9	–	Rear Right Hinge Assy
10	–	Rear Bottom Cover
11	607K04070	2nd Bias Transfer Roller Assy
12	–	Rear Cover Assy SFP
13	–	ESS Window Assy
14	–	ESS Window Plate
15	–	Lever ESS Window
16	822E27572	Wifi Cap
98	815K16400	Kit ESS Window Assy (With 13-15)
99	607K00500	Kit Rear Cover Assy (with 7x2, 12, PL14.1)

98 { 13 - 15

99 { 7 x 2 pcs, 12, PL 14.1

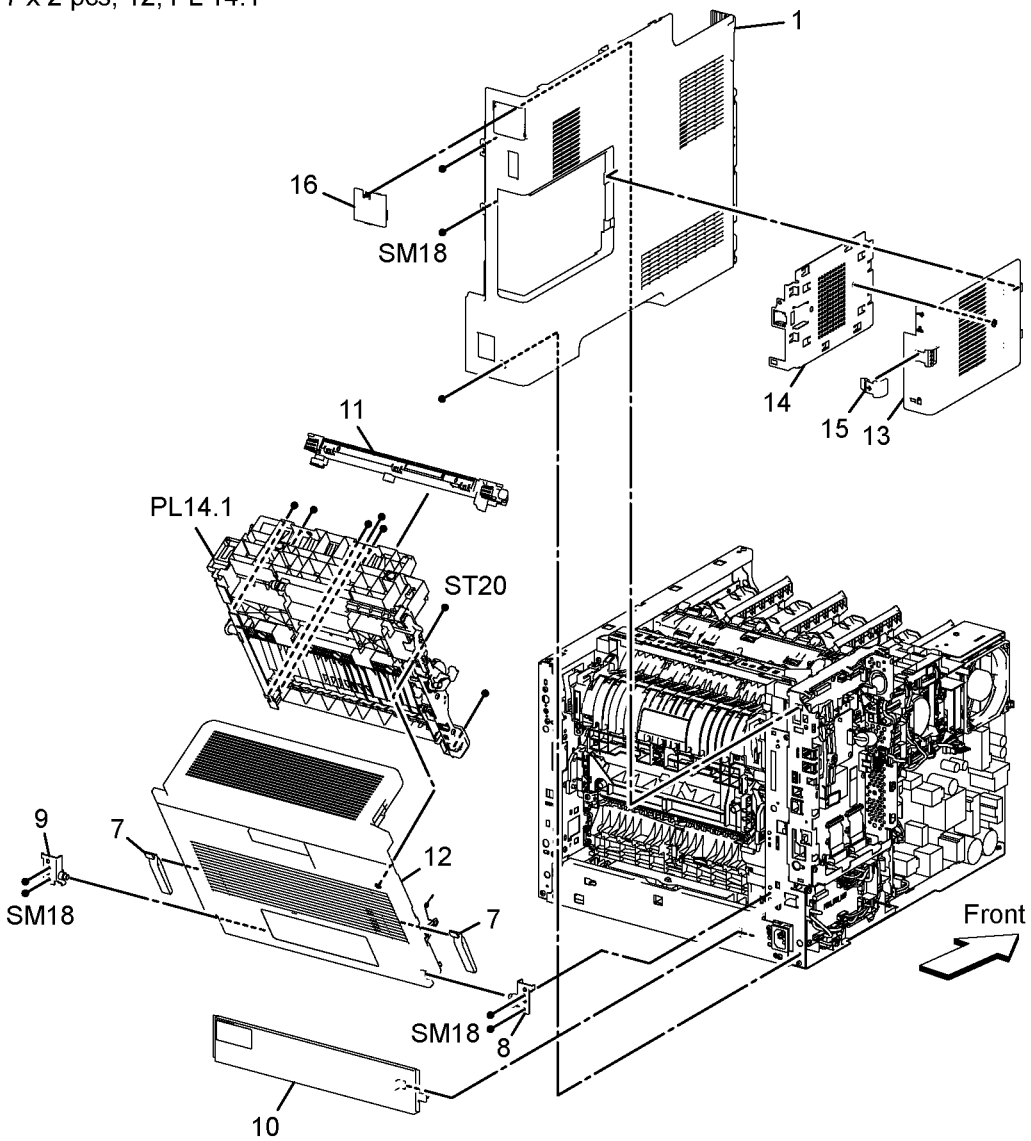

0519004A-SUR

PL 50.1 Scanner

Item	Part	Description
1	607K04410	DADF Assy (with 3-12, 14)
2	607K00951	IIT Assy
3	036K92343	Left Counter Balance Assy
4	036K92323	Right Counter Balance Assy
5	–	DADF Feeder Roll
6	–	Separator Cover Assy
7	–	DADF Separator Spring
8	–	Upper Feeder Assy
9	–	DADF Front Cover
10	–	DADF Rear Cover
11	050K73592	DADF Tray Assy
12	–	Platen Cushion Assy
13	–	Scanner Assy (With 1-12)
14	–	Left IIT Cover
15	–	Left Cap IIT Cover
16	120E35671	DADF Actuator
17	–	IIT
99	607K00132	Kit DADF Feed Roll (with 5-7)

1 { 3 - 12, 14

2 { 14, 15, 17

13 { 1 - 12

99 { 5 - 7

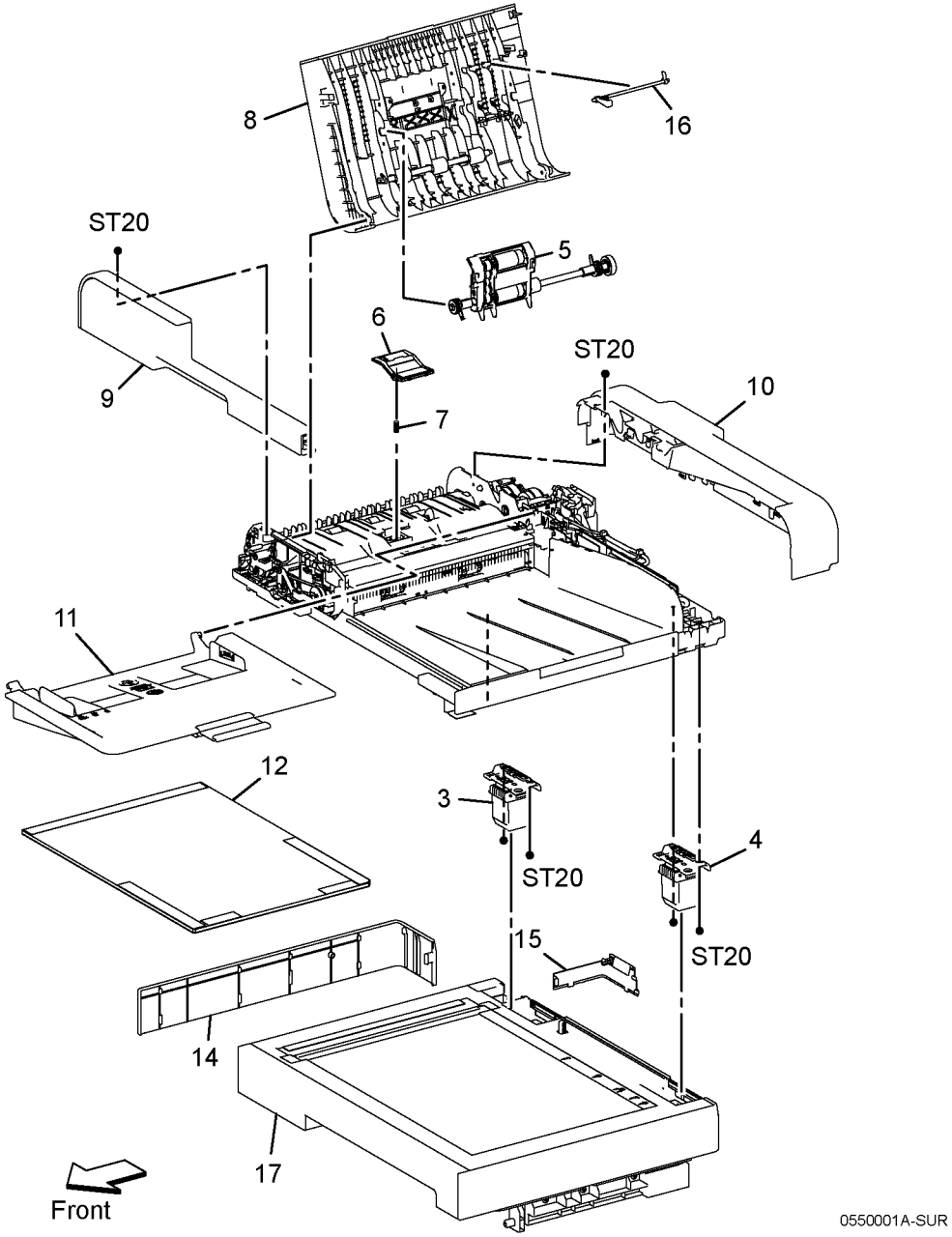

6 General Procedures

GP 1 Using the Service Diagnostics 6-3
GP 2 Fault Codes and History Files 6-6
GP 3 Device Information 6-6
GP 4 How to Switch Off or Switch On the Printer 6-7
GP 6 Electrostatic Discharge Prevention 6-8
GP 7 Machine Specifications 6-8
GP 8 General Disassembly Precautions 6-15
GP 9 Firmware Version Upgrade 6-16
GP 10 How to Check a Motor 6-22
GP 11 How to Check a Sensor 6-23
GP 12 How to Check a Solenoid or Clutch 6-23
GP 13 How to Check a Switch 6-24
GP 14 How to Clone Device Settings 6-24
GP 15 Special Boot Modes 6-25
GP 16 Separate System Modules 6-28
GP 17 External Fax Line Test 6-29
GP 18 Printing Reports 6-29
GP 19 Intermittent or Noise Problem 6-30
GP 20 How to Safely Lift or Move the Printer 6-31
GP 21 Machine Lubrication 6-32
GP 22 Installation Space Requirements 6-32
GP 23 First Print Output Time 6-34
GP 24 Restriction of Hazardous Substances (RoHS) 6-34
GP 26 Media Specifications 6-35
GP 27 Environmental Data 6-36
GP 28 Supplies Plan Conversion 6-37
GP 29 How to Check a Dispenser Motor 6-37
GP 30 IP (ESS) Specifications 6-38
GP 31 IIT Specifications 6-41
GP 32 Fax Specifications 6-42
GP 33 Interior and Exterior Cleaning 6-44
GP 34 Cleaning the Scanner and DADF 6-45
GP35 Setting Up an Ethernet Connection 6-46
GP36 How to Manually Configure an IP Address 6-47
Xerox Supplies and Accessories 6-48

6 Diagnostic Utilities

dC118 Jam Counter 6-49
dC120 Failure Counter 6-49
dC122 Fault History 6-50
dC125 Active Faults 6-51
dC126 System Registration Adjustment 6-51
dC131 NVM Read / Write 6-54
dC132 Device ID / Billing Data 6-55
dC135 HFSI Counter (High Frequency Service Item) 6-57
dC140 Analog Component Monitoring 6-59
dC301 Initialize NVM 6-61
dC305 Panel Diagnostics 6-62
dC330 Component Control 6-64
dC362 Restore NVM Values 6-69
dC363 NVM Backup/Restore 6-69
dC500 Blank Page Threshold Value 6-70
dC612 Print Test Pattern 6-71
dC671 Registration Measuring Cycle 6-77
dC673 Registration Control Sensor Check Cycle 6-78
dC675 Registration Control Setup Cycle 6-79
dC919 Color Balance Adjustment 6-80
dC924 TRC Adjust 6-80
dC939 Procon On / Off Print 6-81
dC945 IIT calibration 6-83
dC991 Toner Density Adjustment 6-83
dC1010 Signals Sending Test 6-84
dC1011 Relay On / Off Test 6-84

6 Change Tags

Change Tags 6-85

GP 1 Using the Service Diagnostics

This section describes which diagnostic functions are available on the MFP and SFP, and explains how to enter and exit the Service Diagnostics modes.

Diagnostics Functions Overview

Table 1lists the diagnostic functions available to test or execute on the MFP and SFP.

Table 1

dC118	Jam Counter	Displays the Count for jams that have occurred up to now.	MFP
dC120	Failure Counter	Displays the Count for failures that have occurred up to now.	MFP
dC122	Fault History	Displays the history in four categories: Document Feeder Jam, Paper Jam, Failure, and Last 40 Faults.	MFP & SFP
dC125	Active Faults	Displays the Current Faults.	MFP
dC126	System Registration Adjustment	Measures and adjusts registration to set correct positions.	MFP & SFP
dC131	NVM Read / Write	To refer to the NVM data and set/modify it.	MFP & SFP
dC132	Device ID / Billing Data	In cases where a serial number mismatch occurs, this function allows these errors to be corrected. MFP: This menu is always displayed. SFP: This menu is displayed only when the related error occurs.	MFP & SFP
dC135	HFSI Counter (For reference only)	Not needed for this product. Displays the Spec Life (threshold value) and the Current Value (usage status) of the periodic replacement parts. You can change the Spec Life and reset the Current Value. The Job History can be used to record/check the previous three replacements.	MFP & SFP
dC140	Analog Component Monitoring	Monitors the Analog value of the A/D converter sensor, by operating the various components.	MFP & SFP
dC301	Initialize NVM	To perform initialization for any NVM area. When initializing IOT area, the Back up/ Restore is necessary in dC363.	MFP & SFP
dC305	Panel Diagnostics	To perform diagnosis of the LED / Audio which is implemented in the UI Panel.	MFP & SFP
dC330	Component Control	Displays the logic state of Input Component input signals and operates the Output Components.	MFP & SFP
dC362	Restore NVM Values	Do not use. This function does not operate.	MFP

Table 1

dC363	NVM Backup / Restore	To backup / restore the NVM Values (IOT areas). Use this command when exchanging the MCU. Do not use when exchanging the ESS. Also, use when initializing the IOT in dC301.	MFP & SFP
dC500	Blank Page Threshold Value	To set the value that is used to determine what is a blank document when performing blank page detection for Fax machines.	MFP
dC612	Print Test Pattern	To print the Test Pattern that is stored in the printer for checking image quality and isolating problems.	MFP & SFP
dC671	Registration Measuring Cycle	Measures the color registration for four colors and displays the status with /.	MFP & SFP
dC673	Registration Control Sensor Check Cycle	To check if the misregistration detection system from the Regi Control (MOB Sensor) is operating normally.	MFP & SFP
dC675	Registration Control Setup Cycle	To set the most appropriate Regi Control correction value for skew etc. at the first execution when replacing the LPH etc.	MFP & SFP
dC919	Color Balance Adjustment	To perform fine adjustment of the center value of the Shadows/Midtones/Highlights output balance for each color Y, M, C and K (Black) for copy images.	MFP
dC924	TRC Adjustment	Manual Density Adjustment manually sets the offset amount of the ADC-LUT created by the ADC patch and finely adjusts the gradation.	MFP & SFP
dC939	Procon On / Off Print	The Procon On/Off Print consists of the following two modes. - “”: This is a Print mode that uses the current Procon Data with the Procon (Process Control) Soft enabled and the TRC Adjustment enabled. - “”: This is a Print mode that uses only the features possessed by the IOT and with the Procon, etc. all turned OFF.	MFP & SFP
dC945	IIT calibration	Do not use. This function does not operate.	MFP
dC991	Toner Density Adjustment	Do not use. This function does not operate.	MFP & SFP
dC1010	Signals Sending Test	Do not use. This function does not operate.	MFP
dC1011	Relay On / Off Test	Do not use. This function does not operate.	MFP

Using the Diagnostics on the MFP

This section explains how to enter and exit the diagnostics on the MFP.

Entering the Diagnostics on the MFP

NOTE: *You must not be logged in as Administrator. Before entering Diagnostics, ensure you are logged out as Administrator.*

1. Press and hold the **Home** button more than five seconds, then release.
2. Enter the Passcode (6789), and touch **OK**.
3. Touch **Diagnostics**.

s6510_6515-398

Figure 1 Diagnostics Home Screen

4. Select the Diagnostics menu.

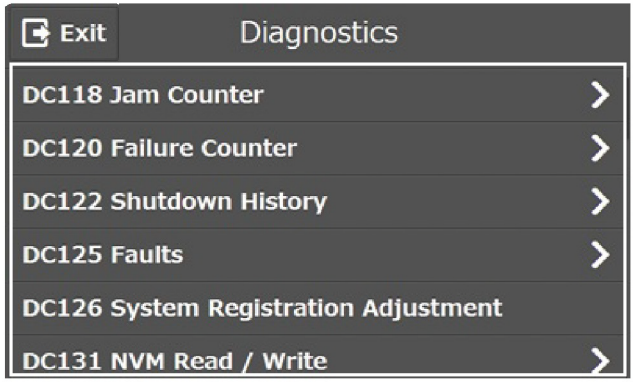

s6510_6515-397

Figure 2 Select from the List of Diagnostics Functions

Exiting the Diagnostics on the MFP

1. Touch **Exit** and select **Clear Error Log History** or **Keep Error Log History**.

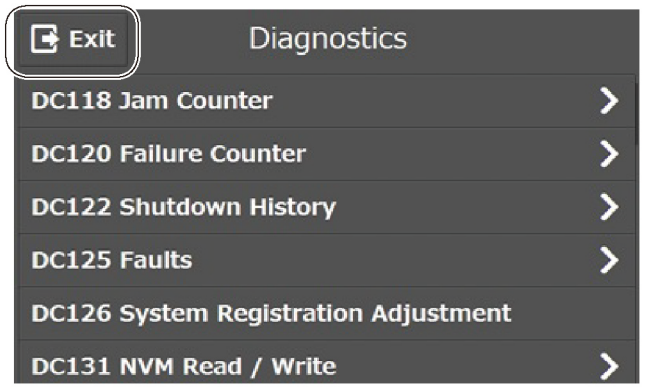

s6510_6515-397

Figure 3 Exit from the Diagnostics

2. Touch **Service**.

s6510_6515-398

Figure 4 Select Service Options

3. Select **Log Out** and exit the Diagnostics.

Using the Diagnostics on the SFP

This section illustrates the SFP diagnostics menu tree, and explains how to enter and exit the diagnostics.

The SFP Diagnostics Menu Tree

The Diagnostics menu tree for the SFP is shown in Figure 5.

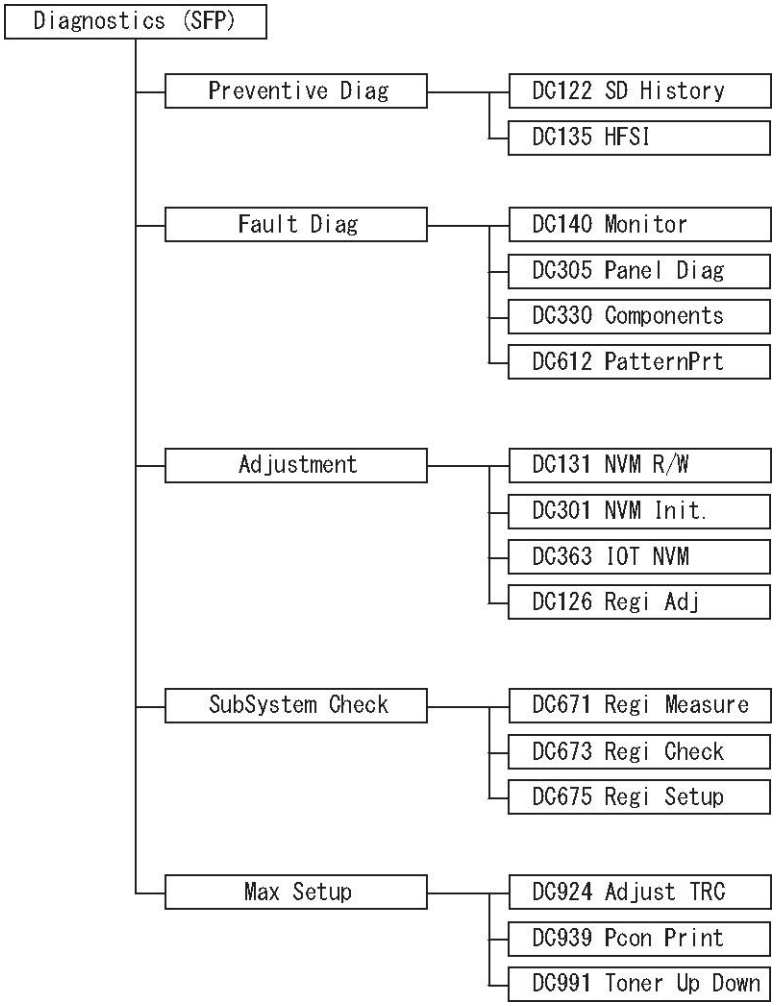

Figure 5 SFP Diagnostics Menu Tree

Entering the Diagnostics on the SFP

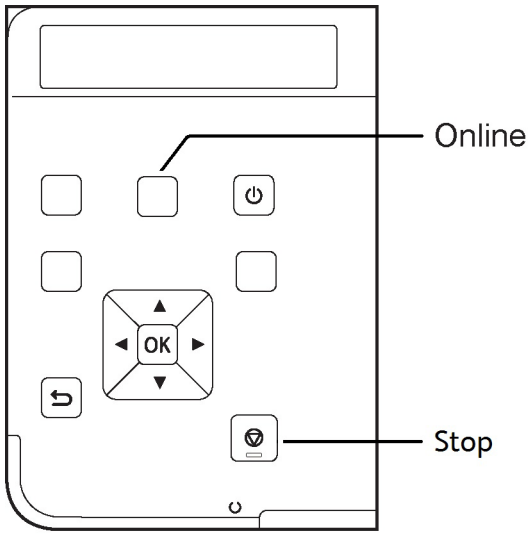

Figure 6 SFP Control Panel

1. Press the Left and Right arrow buttons at the same time.
2. Release the arrow buttons and quickly press **Online** (shown in Figure 6).

Exiting the Diagnostics on the SFP

1. Press the Left and Right arrow buttons at the same time.
2. Release the arrow buttons and quickly press **Online** (shown in Figure 6).
3. Select **Exit (Keep Log)** or **Exit (Clear Log)** using the Up or Down arrows, then press **OK**.
4. Press **OK** to exit the Diagnostics.

GP 2 Fault Codes and History Files

Purpose

To describe access to fault history information and explain the fault code structure.

Fault Data Available from Diagnostics

Diagnostics dC122 gives access to the fault history options that follow:

- For information on paper jam codes, refer to dC118 Jam Counter.
- For information on failures, refer to dC120 Fault Counter.
- For information on current machine faults, refer to dC125 Active Faults.

Function, Fault, Component Codes

Refer to Table 1 for a description of some of the function and fault code prefixes.

Table 1

001	Standby power
002	User interface
003	Machine run control
005	Document transportation
010	Fusing and copy/print transportation
012	Finishers
016	Network controller
04X	Main drives
06X	LED print head, scanner
07X (X = tray No.)	Paper supply (paper trays and bypass)
08X	Paper feed and transport
09X	Xerographics

GP 3 Device Information

Purpose

To provide machine hardware and software information.

Service Information Available

From the Home screen, touch the Device button. This gives the options that follow:

- Language
- About:
  - Device Name
  - Model
  - Serial Number
  - Xerox Asset Tag
  - Customer Asset Tag
  - Software Version
  - Contact information
  - Network information
  - Wi-Fi information
  - Information Pages
- Notifications
- Paper Trays
- Supplies
- Billing Usage
- General:
  - Measurements
  - Reading Order
  - Date & Time
  - System Timeout
  - Display Brightness
  - Sounds
  - Power Save
  - Feature Installation
- Apps:
  - Address Book
  - Email
  - Fax
  - Scan To
- Connectivity
- Support
- Resets:
  - Reset 802.1X and IPSec
  - Reset Fonts, Forms and Macros
  - Reset to Factory Defaults

GP 4 How to Switch Off or Switch On the Printer

Purpose

The printer has a single multifunction button on the control panel. The Power/Wake button restarts, powers up, or powers down the printer. This button also enters and exits low-power mode, and flashes when the printer is in power-saver mode.

To power on the printer, or to exit Low-Power mode or Sleep mode, press the Power/Wake button.

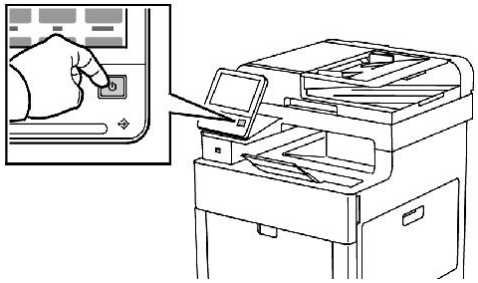

NOTE:

- *The Power/Wake button is the only power switch on the printer.*
- *The printer exits Low-Power mode or Sleep mode automatically when it receives data from a connected device.*
- *When in Low-Power mode, or Sleep mode, the touch screen is turned off and unresponsive. To wake the printer manually, press the Power/Wake button.*

To restart, place the printer in Sleep Mode, or power off the printer:

1. At the printer control panel, press the Power/Wake button.

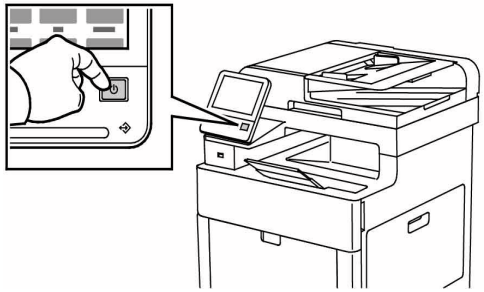

1. Select an option.
   - To restart the printer, touch Restart. At the prompt, touch Restart.
   - To place the printer in Sleep Mode, touch Sleep.

     NOTE: *In Sleep Mode, the touch screen is powered off and the Power/Wake button flashes.*
   - To power off the printer, touch Power Off.
2. If the printer does not respond to a single press of the Power/Wake button, press and hold the button for 5 seconds. A message appears that requests you to wait for the printer to power off.

CAUTION

Do not plug or unplug the power cord when the printer is powered on.

GP 6 Electrostatic Discharge Prevention

Some semiconductor components, and the sub-assemblies that contain them, are vulnerable to damage by Electrostatic Discharge (ESD). These techniques reduce the occurrence of component damage caused by static electricity.

Be sure the power is Off and observe all other safety precautions.

- Immediately before handling any semiconductor components, drain the electrostatic charge from your body. This can be accomplished by touching an earth ground source or by wearing a wrist strap device connected to an earth ground source. Wearing a wrist strap will also prevent accumulation of additional bodily static charges. Be sure to remove the wrist strap before applying power to the unit under test to avoid potential shock.
- After re a static sensitive assembly from its anti-static bag, replace it on a grounded conductive surface. If the anti-static bag is conductive, you may ground the bag and use it as a conductive surface.
- Do not use freon-propelled chemicals. These can generate electrical charges sufficient to damage some devices.
- Do not remove a replacement component or electrical sub-assembly from its protective package until you are ready to install it.
- Immediately before removing the protective material from the leads of a replacement device, touch the protective material to the chassis or circuit assembly into which the device will be installed.
- Minimize body motions when handling unpacked replacement devices. Motion such as your clothes brushing together, or lifting a foot from a carpeted floor can generate enough static electricity to damage an electrostatically sensitive device.
- Handle IC's carefully to avoid bending pins.
- Pay attention to the direction of parts when mounting or inserting them on circuit boards.

GP 7 Machine Specifications

WC6515 MFP Printer Configurations and Options

Available Configurations

The Xerox® WorkCentre® 6515 Color Multifunction Printer is available in three configurations:

Configuration	Feature
N	•Copy •Print •Scan •Fax •USB or Network Connectivity
DN	•Copy •Print •Scan •Fax •Automatic 2-Sided printing •USB or Network Connectivity
DNi	•Copy •Print •Scan •Fax •Automatic 2-Sided printing •USB or Network Connectivity •Wireless Network Adapter

Standard Features

Feature	MFP
Print Speed	Standard and Enhanced modes up to 30 ppm
2-Sided Print speed	Standard mode up to 20 images per minute Enhanced mode up to 20 images per minute
Print Resolution	Standard mode: 600 x 600 dpi Enhanced mode: 600 x 600 x 8 dpi from the print-driver, which prints at 1200 x 2400 dpi
Paper Capacity •Bypass Tray •Tray 1 •Optional 550-Sheet Feeder •Output Tray	 50 sheets 250 sheets 550 sheets 150 sheets
Maximum Print Size	Legal (216 x 356 mm, 8.5 x 14 in.)
2-Sided Printing	N Configuration: Manual DN Configuration: up to 176 g/m² from any tray

Feature	MFP
Copy Speed •1-Sided Copy •2-Sided Copy	 13 copies per minute for color, 21 copies for black and white 8 copies per minute for color, 9 copies for black and white
Copy Resolution	600 x 600 dpi
Maximum Copy Size	Legal (216 x 356 mm, 8.5 x 14 in.)
Document Feeder	Single-Pass Duplex Automatic Document Feeder
Scan Speed Default Scan input speed (DADH) - mono simplex Default Scan input speed (DADH) - color simplex Default Scan input speed (DADH) - mono duplex Default Scan input speed (DADH) - color duplex	 25 ipm 12 ipm 37 ipm 21 ipm
Document Feeder Capacity	50 sheets
Optical Scan Resolution	600 x 600 dpi
Maximum Scan Size •Document Glass •Single-Pass Duplex Automatic Document Feeder	 215.9 x 297 mm (8.5 x 11.7 in.) 215.9 x 355.6 mm (8.5 x 14 in.)
File Formats	JPEG TIFF PDF PDF/A XPS
Supported Scanning	Scan to Desktop (WSD) Scan to SMB Scan to FTP Scan to Email Scan to USB Flash drive
Control Panel	5-inch LCD touch screen and keypad navigation
Connectivity	USB 2.0 USB 3.0 USB Flash drive Ethernet 10/100/1000 Base-TX Wireless network connectivity with an IEEE802.11-n/g/b-compliant Wireless Network Adapter: Standard only on the DNi configuration. NFC AirPrint™
Remote Access	Embedded Web Server

Performance Specifications

Warm-Up Time

Feature	Specifications
Printer warm-up time	Power on: As fast as 53 seconds. Recovery from sleep mode: As fast as 11 seconds. *Note: Warm-up time assumes an ambient temperature of 20ºC (68°F) at 60% relative humidity.*

FPOT (First Print Output Time) and FCOT (First Copy Output Time)

The time required for the first sheet of paper to exit the printer after clicking OK in the driver (FPOT) and time required for paper to exit after pressing Start for copy (FCOT).

Color Mode	FPOT (Ready)	FPOT (Power Saver/ Sleep) ~30mins	FPOT (from cold)	FCOT
B/W	10 sec.	24 sec.	53 sec.	Platen: <10 sec. DADF: <10 sec.
Color	11 sec.	27 sec.	53 sec.	Platen: <12 sec. DADF: <13 sec.

Paper

See the following tables for supported paper types, weights, and sizes:

- Supported Paper Types and Weights - Table 1
- Supported Standard Paper Sizes - Table 2
- Supported Types and Weights for Automatic 2-Sided Printing - Table 3
- Supported Custom Paper Sizes - Table 4

Table 1 Supported Paper Types and Weights

Tray	Paper Types	Weights
All Trays	Recycled Custom	60-105 g/m^2 (16-28 lb)
	Plain Hole Punched Pre-Printed Bond Letterhead	75-105 g/m^2 (20-28 lb)
	Lightweight Cardstock Lightweight Glossy Cardstock	106-163 g/m^2 (28-43 lb)
	Cardstock Glossy Cardstock	164-220 g/m^2 (44-58 lb)

Table 1 Supported Paper Types and Weights

Tray	Paper Types	Weights
Bypass Tray	Labels Envelope	

Table 2 Supported Standard Paper Sizes

Tray	European Standard Sizes	North American Standard Sizes
All Trays	A4 (210 x 297 mm, 8.3 x 11.7") B5 (176 x 250 mm, 6.9 x 9.8") A5 (148 x 210 mm, 5.8 x 8.3") JIS B5 (182 x 257 mm, 7.2 x 10.1") 215 x 315 mm, 8.5 x 12.4")	Legal (216 x 356 mm, 8.5 x 14") Folio (216 x 330 mm, 8.5 x 13") Letter (216 x 279 mm, 8.5 x 11") Executive (184 x 267 mm, 7.25 x 10.5") 203 x 254 mm, 8 x 10"
Bypass Tray	A6 (105 x 148 mm, 4.1 x 5.8") B6 (125 x 176 mm, 4.9 x 6.9") C5 envelope (162 x 229 mm, 6.4 x 9") C6 envelope (114 x 162 mm, 4.5 x 6.38") DL envelope (110 x 220 mm, 4.33 x 8.66") JIS B6 (128 x 182 mm, 5.0 x 7.2") 127 x 178 mm, 5 x 7" Postcard (100 x 148 mm, 3.9 x 5.8") Postcard (148 x 200 mm, 5.8 x 7.9")	Statement (140 x 216 mm, 5.5 x 8.5") Monarch envelope (98 x 190 mm, 3.9 x 7.5") No. 9 envelope (99 x 226 mm, 3.9 x 8.9") No. 10 envelope (241 x 105 mm, 4.1 x 9.5") Envelope 6 x 9 (152 x 228 mm, 6 x 9 in) 76 x 127 mm, 3 x 5" Postcard (89 x 140 mm, 3.5 x 5.5") Postcard (102 x 152 mm, 4 x 6")

Table 3 Supported Paper Types and Weights for Automatic 2-Sided Printing

Paper Types	Weights
Recycled Custom	60-105 g/m^2
Plain Hole Punched Pre-Printed Letterhead Bond	75-10s5 g/m^2
Lightweight Cardstock Lightweight Glossy Cardstock	106-163 g/m^2

Table 4 Supported Custom Paper Sizes

Tray	Size
All Trays Automatic 2-Sided Printing Duplex Automatic Document Feeder	Width: 148.0-215.9 mm (5.8-8.5") Length: 210-355.6 mm (8.3-14")

Table 4 Supported Custom Paper Sizes

Tray	Size
Bypass Tray	Width: 76.2-215.9 mm (3-8.5") Length: 127-355.6 mm (5-14")

Options and Upgrades

- Wireless Network Adapter: Optional for the N and DN configurations but standard for the DNi configuration. The Wireless Network Adapter is IEEE802.11 n/g/b-compliant, and supports 2.4-GHz and 5-GHz frequencies.
- 550-Sheet Feeder

Physical Specifications

Weights and Dimensions

	Configurations without the Optional 550-Sheet Feeder	All Models with the Optional 550-Sheet Feeder
Width	420 mm (16.5 in.)	420 mm (16.5 in.)
Depth	506 mm (19.9 in.)	506 mm (19.9 in.)
Height	500 mm (19.7 in.)	650 mm (25.6 in.)
Weight	31 kg (68 lb.)	38 kg (84 lb.)

Standard Configuration

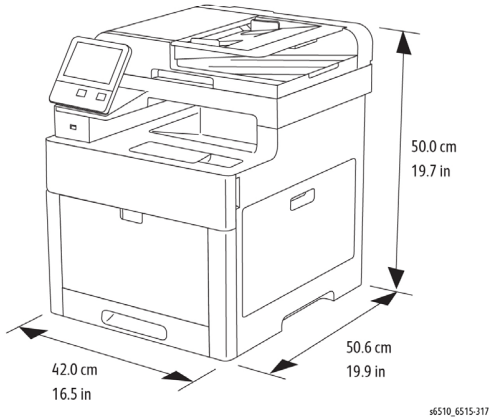

Configuration with Optional 550-Sheet Feeder

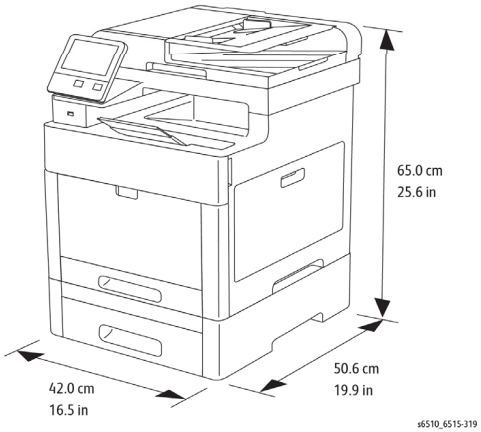

Total Space Requirements

	Configurations without the Optional 550-Sheet Feeder	All Models with the Optional 550-Sheet Feeder
Width	870 mm (34.3 in.)	870 mm (34.3 in.)
Depth	1264 mm (49.8 in.)	1264 mm (49.8 in.)
Height	751 mm (29.6 in.)	901 mm (35.5 in.)

Clearance Requirements

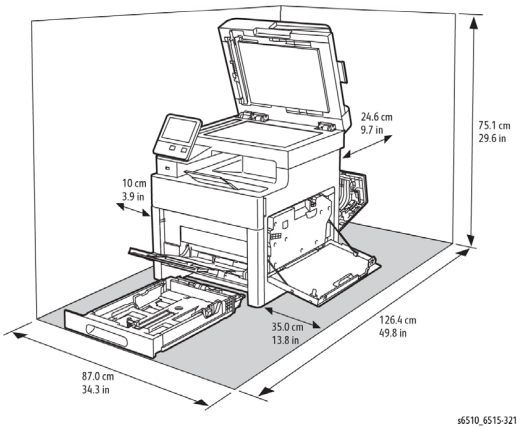

Clearance Requirements with Optional 550-Sheet Feeder

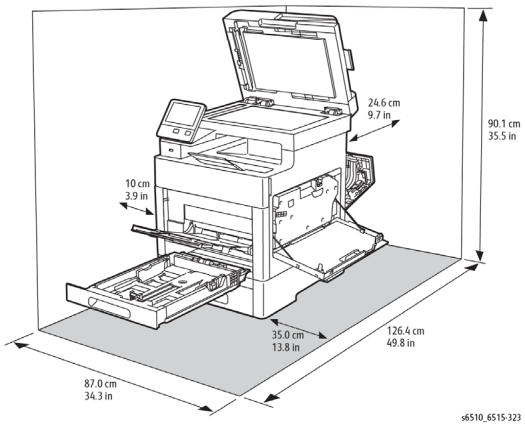

Environmental Specifications

Temperature

Standard Configuration

- Operating temperature: 5–32°C (41–90°F)
- Optimum temperature: 15–28°C (59–82°F)

Relative Humidity

- Minimum–Maximum Humidity Range: 15–85%
- Optimal Humidity Range: 20–70% relative humidity at 15–28ºC (59–82ºF)

  NOTE:

  – *Under extreme environmental conditions, such as 10°C and 85% relative humidity, printing defects can occur due to condensation in the printer.*

  – *Print quality can be affected when operating near the limits for both temperature and humidity.*

Elevation

For optimum performance, use the printer at elevations below 3100 m (10,170 ft.).

Electrical Specifications

Power Supply Voltage and Frequency

Power Supply Voltage	Frequency	Current Required
120 VAC +/-10% (108–132 VAC)	60 Hz +/-3 Hz	12 A
220–240 VAC +/-10% (198–264 VAC)	50 Hz +/-3 Hz	6 A

Power Consumption

- Power Saver Mode (Sleep): 1.2 W
- Ready: 52 W
- Continuous printing: 370W

P6510 SFP Printer Configurations and Options

Available Configurations

The Xerox® Phaser® 6510 Color Printer is available in three configurations:

Configuration	Feature
N	Print USB and Network Connectivity
DN	Print Automatic 2-Sided printing USB or Network Connectivity
DNi	Print Automatic 2-Sided printing USB or Network Connectivity Wireless Network Adapter

Standard Features

Feature	SFP
Print Speed	Standard and Enhanced modes up to 30 ppm
2-Sided Print speed	Standard mode up to 20 images per minute Enhanced mode up to 20 images per minute
Print Resolution	Standard mode: 600 x 600 dpi Enhanced mode: 600 x 600 x 8 dpi from the print-driver, which prints at 1200 x 2400 dpi
Paper Capacity •Bypass Tray •Tray 1 •Optional 550-Sheet Feeder •Output Tray	 50 sheets 250 sheets 550 sheets 150 sheets
Maximum Print Size	Legal (216 x 356 mm, 8.5 x 14 in.)
2-Sided Printing	N Configuration: Manual DN Configuration: up to 176 g/m² from any tray
Control Panel	5-inch LCD touch screen and keypad navigation
Connectivity	USB 2.0 USB 3.0 USB Flash drive Ethernet 10/100/1000 Base-TX Wireless network connectivity with an IEEE802.11-n/g/b-compliant Wireless Network Adapter: Standard only on the DNi configuration. NFC AirPrint™
Remote Access	Embedded Web Server

Performance Specifications

Warm-Up Time

Feature	Specifications
Printer warm-up time	Power on: As fast as 53 seconds. Recovery from sleep mode: As fast as 11 seconds. *Note: Warm-up time assumes an ambient temperature of 20ºC (68°F) at 60% relative humidity.*

FPOT (First Print Output Time), the time required for the first sheet of paper to exit the printer after clicking OK in the driver (FPOT).

Color Mode	FPOT (Ready)	FPOT (Power Saver/ Sleep) ~30mins	FPOT (from cold)
B/W	9 sec.	23 sec.	53 sec.
Color	11 sec.	26 sec.	53 sec.

Paper

See the following tables for supported paper types, weights, and sizes:

- Supported Paper Types and Weights - Table 1
- Supported Standard Paper Sizes - Table 2
- Supported Types and Weights for Automatic 2-Sided Printing - Table 3
- Supported Custom Paper Sizes - Table 4

Table 5 Supported Paper Types and Weights

Tray	Paper Types	Weights
All Trays	Recycled Custom	60-105 g/m^2 (16-28 lb)
	Plain Hole Punched Pre-Printed Bond Letterhead	75-105 g/m^2 (20-28 lb)
	Lightweight Cardstock Lightweight Glossy Cardstock	106-163 g/m^2 (28-43 lb)
	Cardstock Glossy Cardstock	164-220 g/m^2 (44-58 lb)
Bypass Tray	Labels Envelope	

Table 6 Supported Standard Paper Sizes

Tray	European Standard Sizes	North American Standard Sizes
All Trays	A4 (210 x 297 mm, 8.3 x 11.7") B5 (176 x 250 mm, 6.9 x 9.8") A5 (148 x 210 mm, 5.8 x 8.3") JIS B5 (182 x 257 mm, 7.2 x 10.1") 215 x 315 mm, 8.5 x 12.4")	Legal (216 x 356 mm, 8.5 x 14") Folio (216 x 330 mm, 8.5 x 13") Letter (216 x 279 mm, 8.5 x 11") Executive (184 x 267 mm, 7.25 x 10.5") 203 x 254 mm, 8 x 10"
Bypass Tray	A6 (105 x 148 mm, 4.1 x 5.8") B6 (125 x 176 mm, 4.9 x 6.9") C5 envelope (162 x 229 mm, 6.4 x 9") C6 envelope (114 x 162 mm, 4.5 x 6.38") DL envelope (110 x 220 mm, 4.33 x 8.66") JIS B6 (128 x 182 mm, 5.0 x 7.2") 127 x 178 mm, 5 x 7" Postcard (100 x 148 mm, 3.9 x 5.8") Postcard (148 x 200 mm, 5.8 x 7.9")	Statement (140 x 216 mm, 5.5 x 8.5") Monarch envelope (98 x 190 mm, 3.9 x 7.5") No. 9 envelope (99 x 226 mm, 3.9 x 8.9") No. 10 envelope (241 x 105 mm, 4.1 x 9.5") Envelope 6 x 9 (152 x 228 mm, 6 x 9 in) 76 x 127 mm, 3 x 5" Postcard (89 x 140 mm, 3.5 x 5.5") Postcard (102 x 152 mm, 4 x 6")

Table 7 Supported Paper Types and Weights for Automatic 2-Sided Printing

Paper Types	Weights
Recycled Custom	60-105 g/m^2
Plain Hole Punched Pre-Printed Letterhead Bond	75-10s5 g/m^2
Lightweight Cardstock Lightweight Glossy Cardstock	106-163 g/m^2

Table 8 Supported Custom Paper Sizes

Tray	Size
All Trays Automatic 2-Sided Printing Duplex Automatic Document Feeder	Width: 148.0-215.9 mm (5.8-8.5") Length: 210-355.6 mm (8.3-14")
Bypass Tray	Width: 76.2-215.9 mm (3-8.5") Length: 127-355.6 mm (5-14")

Options and Upgrades

- Wireless Network Adapter: Optional for the N and DN configurations but standard for the DNi configuration. The Wireless Network Adapter is IEEE802.11 n/g/b-compliant, and supports 2.4-GHz and 5-GHz frequencies.
- 550-Sheet Feeder

Physical Specifications

Weights and Dimensions

	Configurations without the Optional 550-Sheet Feeder	All Models with the Optional 550-Sheet Feeder
Width	420 mm (16.5 in.)	420 mm (16.5 in.)
Depth	499 mm (19.6 in.)	499 mm (19.6 in.)
Height	347 mm (13.7 in.)	497 mm (19.6 in.)
Weight	24 kg (53 lb.)	31 kg (68 lb.)

Standard Configuration

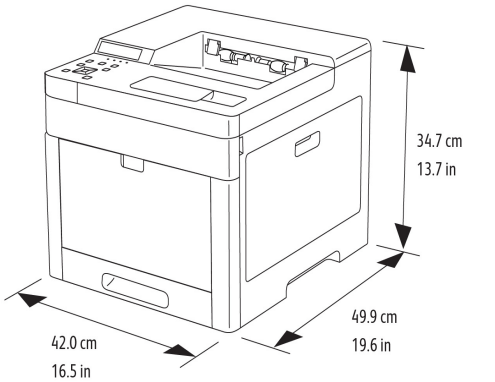

s6510_6515-316

Configuration with Optional 550-Sheet Feeder

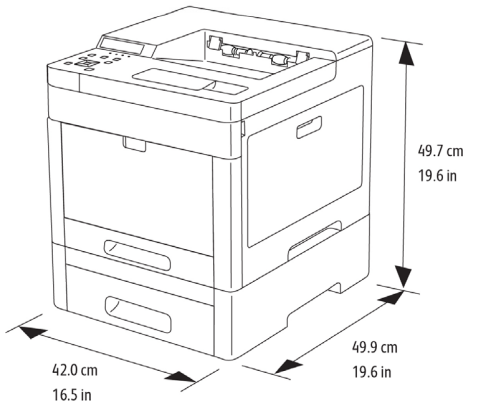

s6510_6515-318

Total Space Requirements

	Configurations without the Optional 550-Sheet Feeder	All Models with the Optional 550-Sheet Feeder
Width	870 mm (34.3 in.)	870 mm (34.3 in.)
Depth	1264 mm (49.8 in.)	1264 mm (49.8 in.)
Height	377 mm (14.8 in.)	527 mm (20.7 in.)

Clearance Requirements

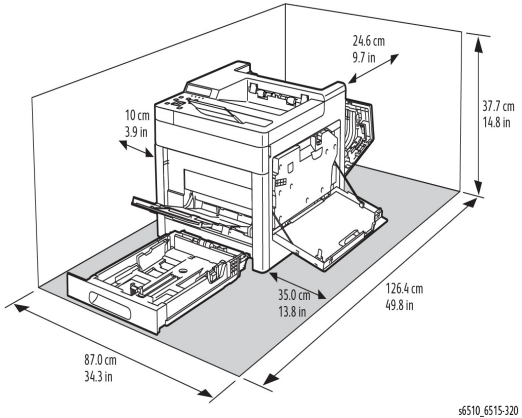

s6510_6515-320

Clearance Requirements with Optional 550-Sheet Feeder

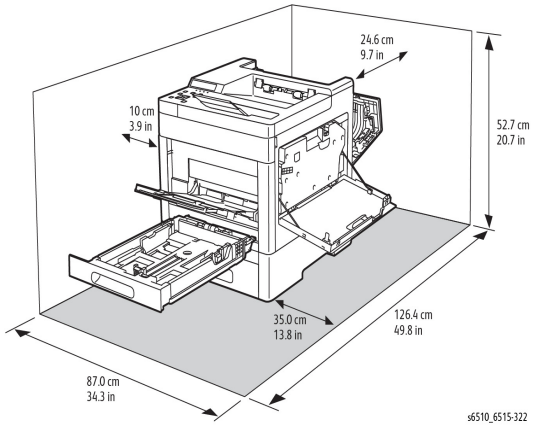

s6510_6515-322

Environmental Specifications

Temperature

Standard Configuration

- Operating temperature: 5–32°C (41–90°F)
- Optimum temperature: 15–28°C (59–82°F)

Relative Humidity

- Minimum–Maximum Humidity Range: 15–85%
- Optimal Humidity Range: 20–70% relative humidity at 15–28ºC (59–82ºF)

  NOTE:
  - *Under extreme environmental conditions, such as 10°C and 85% relative humidity, printing defects can occur due to condensation in the printer.*
  - *Print quality can be affected when operating near the limits for both temperature and humidity.*

Elevation

For optimum performance, use the printer at elevations below 3100 m (10,170 ft.).

Electrical Specifications

Power Supply Voltage and Frequency

Power Supply Voltage	Frequency	Current Required
120 VAC +/-10% (108–132 VAC)	60 Hz +/-3 Hz	11 A
220–240 VAC +/-10% (198–264 VAC)	50 Hz +/-3 Hz	6 A

Power Consumption

- Power Saver Mode (Sleep): 1 W
- Ready: 44 W
- Continuous printing: 380W

GP 8 General Disassembly Precautions

Purpose

Use these precautions when disassembling and reassembling components.

Procedure

NOTE: *The close proximity of cables to moving parts makes proper routing essential. If components are removed, any cables disturbed by the procedure must be restored as close as possible to their original positions. Before removing any component from the machine, note the cable routing that will be affected.*

Whenever servicing the machine, perform the following:

1. Check the replacement part number.
2. Check to verify that jobs are not stored in memory.
3. Power down the printer, GP 4.
4. Use a flat and clean surface.
5. Only install authorized components.
6. Do not forcibly remove plastic components.
7. Ensure all components are in their correct position.
8. When replacing screws into plastic components, turn the screw counterclockwise to engage the original thread, then turn the screw clockwise. Do not overtighten. If a new thread is cut, the plastic component will lose the ability to hold the screw. This also applies to metal components.

GP 9 Firmware Version Upgrade

Purpose

Use this procedure to update the Printer Firmware, or when a printer repair requires the firmware to be reinstalled.

Obtaining the Firmware

Download the Firmware Version Upgrade Tool (FWDLMgr.exe) and the Printer Firmware (.bin) from the Support Website when upgrading the Printer Firmware.

NOTE: *There is a different FWDLMgr.exe tool for the MFP and for the SFP.*

Procedure

NOTE: *Prior to updating firmware, ensure that* ***firmware upgrade*** *is enabled.*

There are a number of methods available to download the Printer Firmware. These methods can be summarized by the following:

Using the FWDLMgr.exe tool

Through the Ethernet connection to the machine via the customer's network.
Through an Ethernet connection to the machine via a cross-over cable
Through a USB cable connection to the machine.

USB stick method via a "Special Boot Mode" (MFP only)

NOTE: *Software download is not supported through the device's Embedded Web Server.*

See Table 1 for details about download availability for the user and the CSE, and whether a download method applies to the MFP or the SFP.

Table 1 Availability and Application of Download Methods

		MFP	SFP
Recommended Upgrade Methods	**Firmware Download Manager Tool using Port 9100***	**User, CSE**	**User, CSE**
	Firmware Download Manager Tool tool using USB cable connection	**User, CSE**	User, CSE
CSE - Only Upgrade Methods**	Special Boot Menu method using USB Memory Stick	**CSE only**	-
	Special Boot Menu method using USB cable connection	**CSE only**	**CSE only**

* Users would use their network to connect to the machine's IP address. CSE's could use the user's network or establish a direct connection via a cross-over cable.

** These methods can be attempted if the device will not power up normally. Refer to GP15 for Special Boot Menu.

Firmware Download Manager Tool using Port 9100

The following procedure describes the Firmware Update download method which is available to the user and the CSE on the MFP and SFP.

Procedure

1. Connect the PC and the printer to the same network. If a cross-over cable is being used, refer to GP35 for setup details.
2. Turn on the power for the PC and the Printer. When the printer reaches the Ready state, print out a configuration report.
3. Check that the IP Address/Subnet Mask are both on the same IP scheme and the printer's IP address can be pinged from the PC.
4. Check that Firmware upgrade is set to Enable in the Embedded Web Server (Home/ System / Software Update / Enable)
5. Click to run the Firmware Version Upgrade Tool (FWDLMgr.exe).
6. Select **Agree** on the Firmware Version Upgrade Tool (License Agreement).

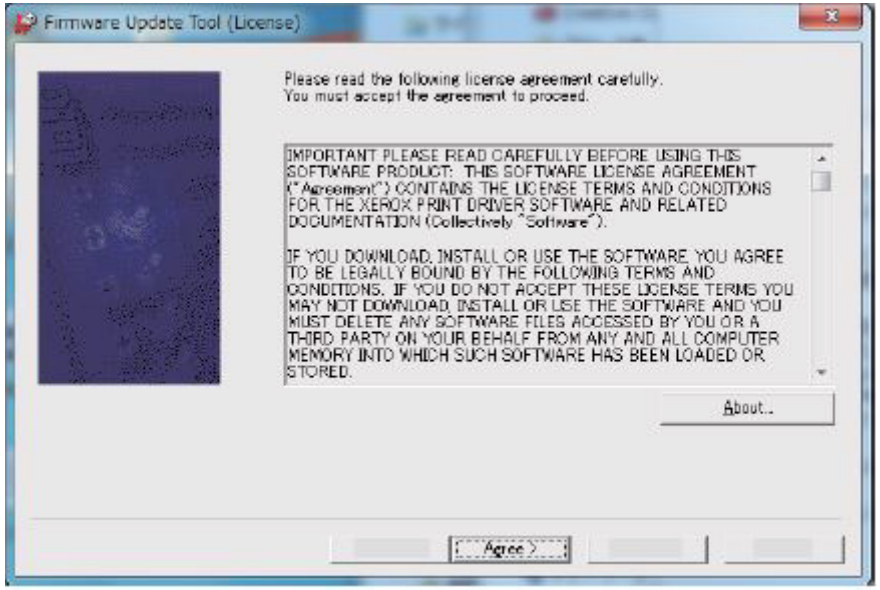

7. Select the Printer model from the pull-down menu and browse to where the Firmware file (.bin) is located and choose it. Click Add and then click Next.

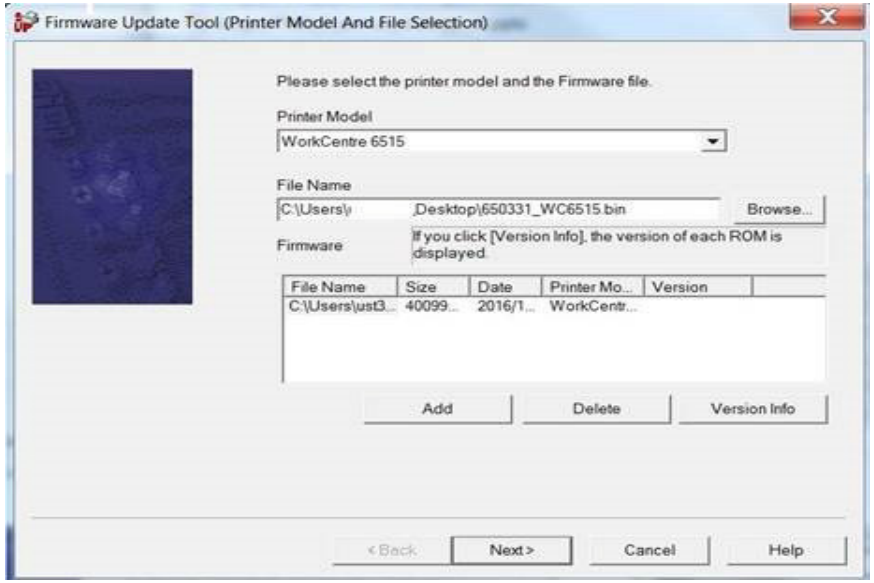

8. Select the Network (Port9100) on the Communication Interface Selection screen, and click **Next**.

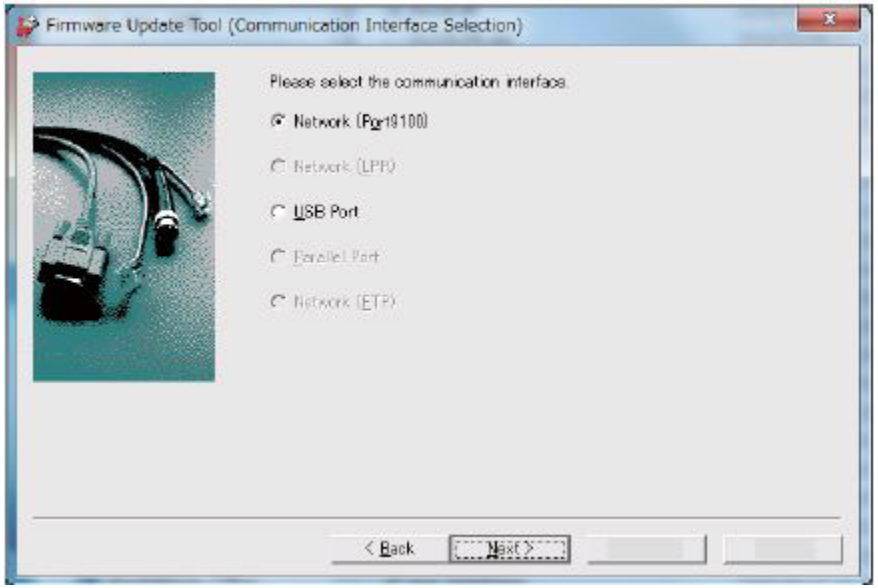

9. Specify the printer you want to update on the Printer Specification screen (entering the IP Address is the easiest method). Press Next to start the FW download.

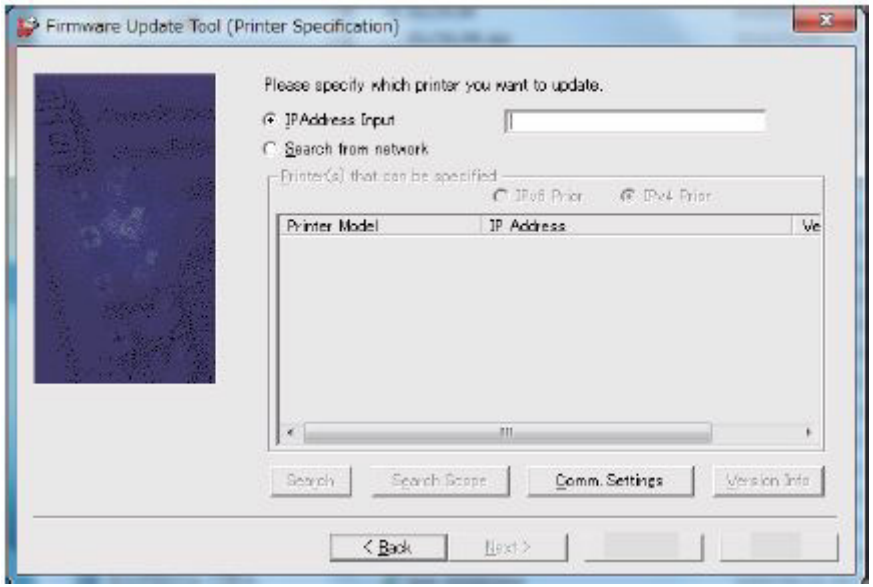

CAUTION

In the following step, do not turn off the printer until the reboot is complete. The printer will reboot after the download is complete.

10. The Firmware update status appears on the Update in Progress screen.

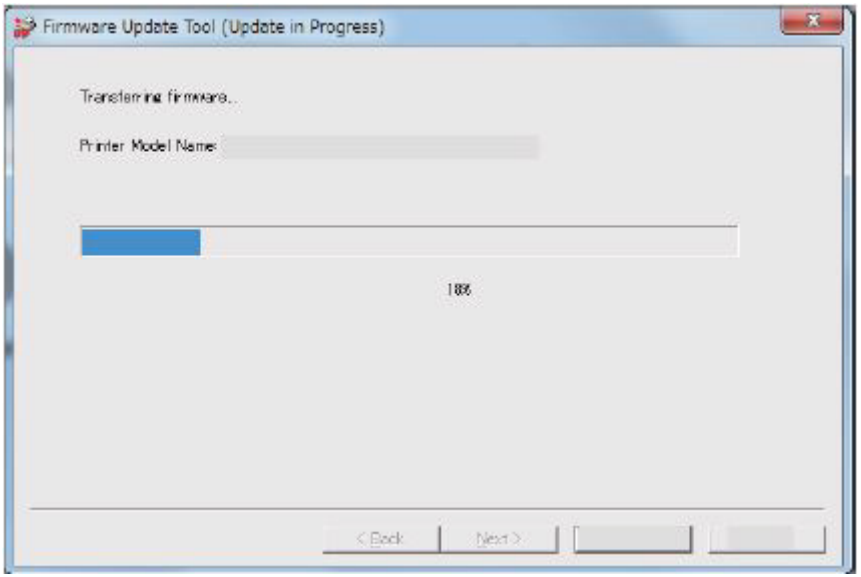

11. Click **complete** on the Result screen. The firmware upgrade is complete, the printer will reboot, and a Software Upgrade Report will be printed. .

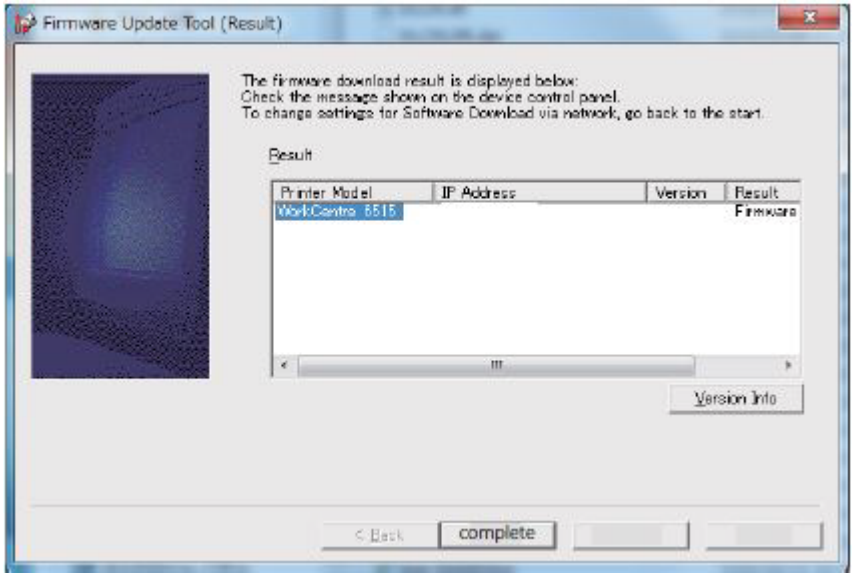

Firmware Download Manager Tool using USB Port

Procedure

1. 1.Connect the PC to the printer with a USB cable (Type A to Type B, male on both ends).

   NOTE: *For both the printer and MFP, the USB Type B port is on the back of the device).*

2. Turn on the power for the PC and the Printer. When the printer reaches the Ready state, print out a configuration report.
3. Check that Firmware upgrade is set to Enable in the Embedded Web Server (Home / System / Software Update / Enable)
4. Click to run the Firmware Version Upgrade Tool (FWDLMgr.exe).
5. Select **Agree** on the Firmware Version Upgrade Tool (License Agreement).

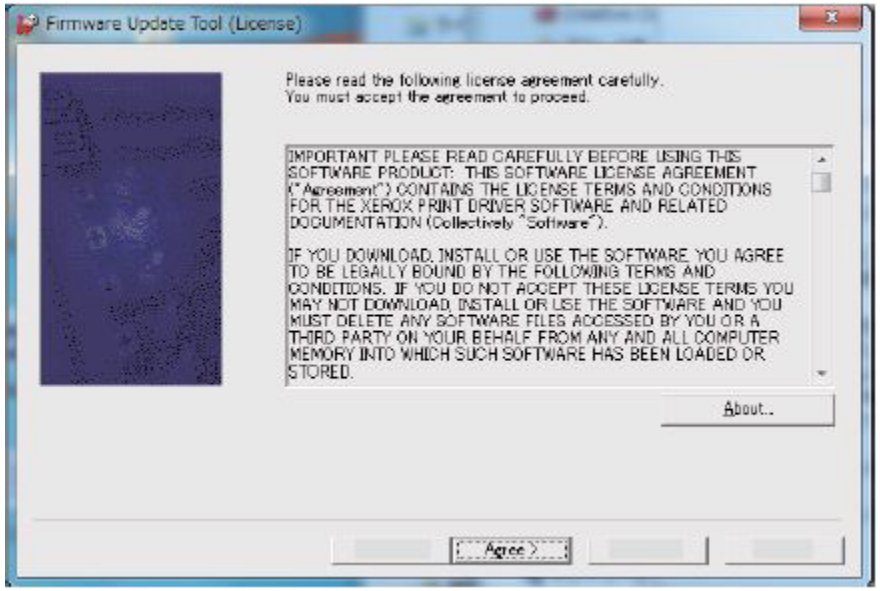

6. Select the Printer model from the pull-down menu and browse to where the Firmware file (.bin) is located and choose it. Click Add and then click Next..

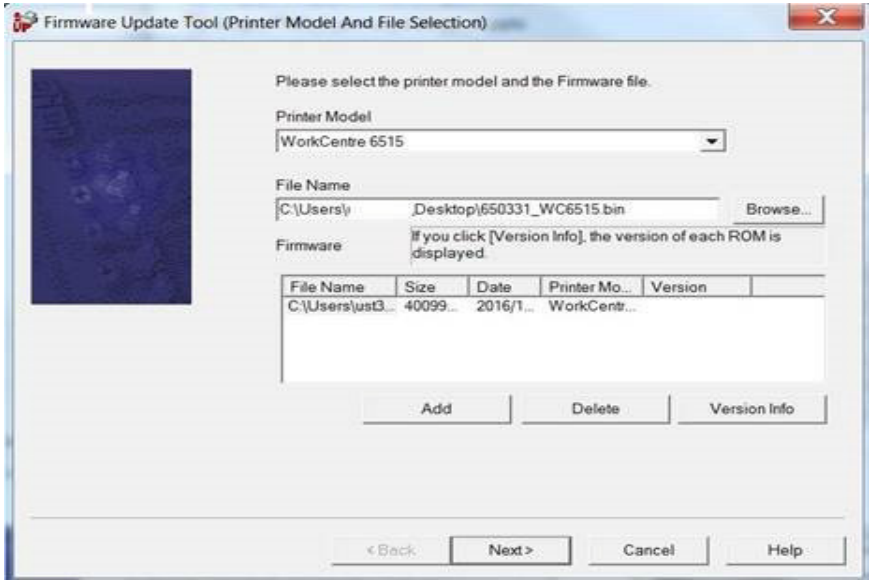

7. Select USB Port on the Communication Interface Selection screen, and click Next to begin the download.

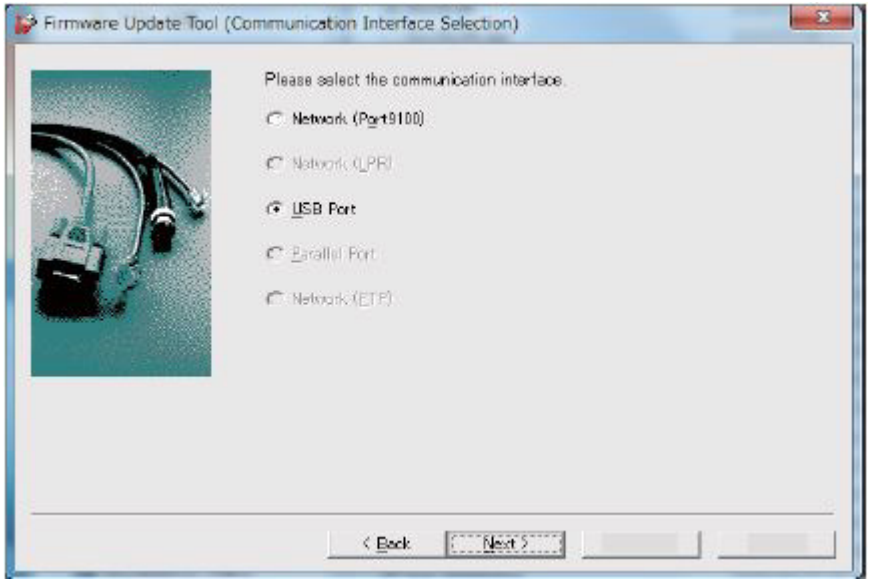

CAUTION

In the following step, do not turn off the printer until the reboot is complete. The printer will reboot after the download is complete.

8. The Firmware update status appears on the Update in Progress screen.

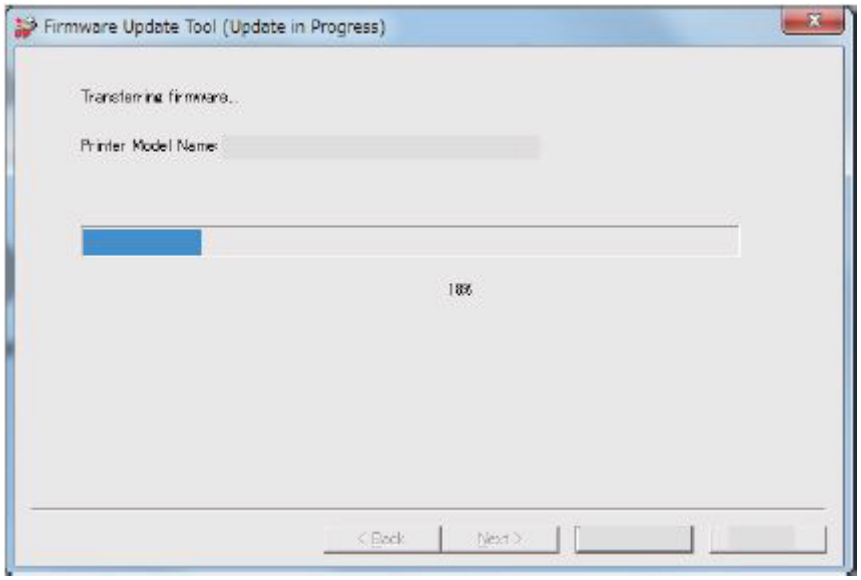

9. Click **complete** on the Result screen. The firmware upgrade is complete, the printer will reboot, and a Software Upgrade Report will be printed. .

Special Boot menu method using USB Memory Stick (MFP only)

The following procedure describes the USB Stick download method which is available only to the CSE on the MFP. Use this when the MFP can't power up normally..

NOTE: *The USB device must be formatted using the FAT32 file system.*

Preparation

1. Create a Folder named "DWLD" on the USB memory device.
2. Store the firmware download file (.bin) in the "DWLD" folder

Procedure

1. With the printer's power off, attach the USB memory device to the printer (Figure 1).

Figure 1 Use the Front USB Connector for Firmware Download

2. Press and hold the home and power buttons until the device powers on and SPECIAL BOOT MENU appears.
3. Press the letters “A” and “B” and the Home button simultaneously to enter the next screen (SPECIAL BOOT MENU 1/3 will appear). Refer to the two figures below and GP 15 for additional details if needed.

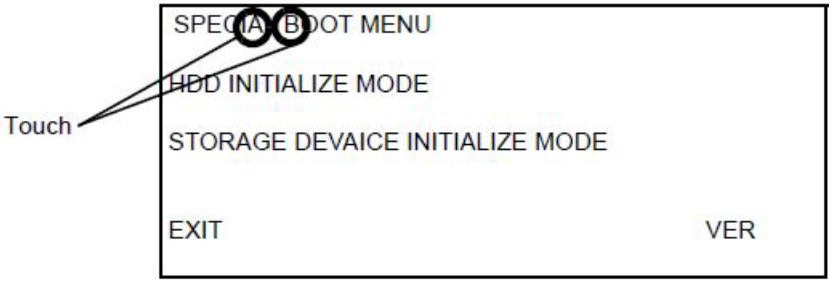

4. When the 10-key screen appears, press 6-7-8-9-# to enter.

CAUTION

In the following step, do not turn off the printer until the reboot is complete. The printer will reboot after the download is complete.

5. At the screen titled SPECIAL BOOT MENU 1/3, select DOWNLOAD MODE and then YES. The front panel UI will display SW update progress and the machine will eventually reboot.
6. After the reboot is complete, a Software Upgrade Report will print out. The process is complete and the USB memory stick can be removed.

Special Boot menu method using USB Cable method (SFP only)

The following procedure describes the USB Cable download method which is available only to the CSE on the SFP. Use this method when the printer can’t power up normally.

NOTE: *This procedure requires a USB cable (Type A to Type B, male on both ends)*

Procedure

1. With the machine powered off, connect the PC to the printer with a USB cable.

   NOTE: *The USB Type B port is on the back of the printer.*

2. Press and hold the OK + Power + Cancel buttons simultaneously until the following is displayed (about 10-15 seconds) and then release the buttons.

   --BOOT MODE --

   DOWNLOAD MODE

3. Continue with the procedure outlined in **Firmware Download Manager Tool using USB Port** starting from step 3.

Special Boot menu method using USB Cable method (MFP only)

The following procedure describes the USB Cable download method which is available only to the CSE on the MFP. Use this method when the MFP can't power up normally or as an alternative to the USB Memory Stick Method.

NOTE: *This procedure requires a USB cable (Type A to Type B, male on both ends)*

Procedure

1. With the machine powered off, connect the PC to the printer with a USB cable.

   NOTE: The USB Type B port is on the back of the printer.

2. Press and hold the home and power buttons until the device powers on and SPECIAL BOOT MENU appears.
3. Press the letters "A" and "B" and the Home button simultaneously to enter the next screen (SPECIAL BOOT MENU 1/3 will appear). Refer to the two figures below and GP 15 for additional details if needed.

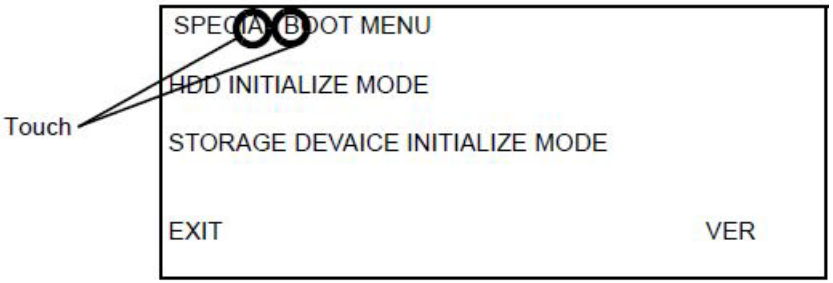

4. When the 10-key screen appears, press 6-7-8-9-# to enter.

CAUTION

In the following step, do not turn off the printer until the reboot is complete. The MFP will reboot after the download is complete.

5. At the screen titled SPECIAL BOOT MENU 1/3, select DOWNLOAD MODE and then YES.
6. While the front panel UI displays 0% completed, quickly proceed with the procedure outlined in **Firmware Download Manager Tool using USB Port** starting from step 3.

GP 10 How to Check a Motor

This procedure describes how to check a motor:

Initial Actions

WARNING

Switch off the electricity to the machine. Disconnect the power cord from the customer supply while performing tasks that do not need electricity. Electricity can cause death or injury. Moving parts can cause injury.

1. Check that the motor is free to rotate.
2. Check that all the motors mechanisms are clean, free to move and lubricated correctly.
3. Enter the component control code for the motor, refer to dC330. Run the motor for 30 seconds, if the motor shows signs of or can be heard to slow down, the motor is defective. Replace the motor.
4. Perform the appropriate procedure:
   - Two Wire DC Motor
   - DC Motor with Integral Encoder
   - Four Wire Stepper Motor

NOTE: *The voltages, PJ numbers, pin numbers and PWB names shown are an example only. Go to the wiring diagram associated with the RAP for the correct information.*

NOTE: *In cases where the motor may be driven forward or backward, the same two feed wires are used, but the voltages on them are reversed, to reverse the motor direction. Such motors may have two component control codes, for forward and reverse. A typical application is a tray lift motor with a tray-up and a tray-down direction*

1. Check the drive voltage when the component control code for the motor is entered. If the drive voltage is present at the motor, but the motor does not turn, install a new motor. If the drive voltage is not present, go to step 2.
2. Check that the drive voltage is correct at the driver output pins of the PWB when the component control code for the motor is entered. If the drive voltage is present, check the wiring and connectors to the motor. If the drive voltage is not present, check the power to the driver PWB. If the power to the PWB is good, install a new driver PWB.

NOTE: *This type of motor has the normal drive voltages for a DC motor, plus the +3.3V and 0V lines for the encoder. The encoder has two outputs, A and B, producing pulses when the motor is on. When the motor is running in one direction, the encoder A pulses lead the encoder B pulses. In the other direction, encoder B pulses lead encoder A pulses. In this way the controller can detect that the motor is running in the correct direction.*

Check the operation of the motor as follows:

1. Check the drive voltage when the component control code for the motor is entered. If the drive voltage is present at the motor, but the motor does not turn, install a new motor. If the drive voltage is not present, go to step 2.
2. Check that the drive voltage is correct at the output pins of the driver PWB when the component control code for the motor is entered. If the drive voltage is present, check the wiring and connectors to the motor. If the drive voltage is not present, check the power to the driver PWB. If the power to the PWB is good, install a new driver PWB.

NOTE: *When checking for pulses, use a standard digital multimeter. Using the DC volts range, or the AC volts range, expect to obtain a reading greater than 1V and less than 4 volts, while the motor is running. The actual value depends on the meter's reaction to square waves and to the particular frequency of the pulses. It is common to obtain a reading of 2 to 3 volts. If the meter has a minimum and maximum recording facility, expect a maximum value of around +4.9 volts DC, and a minimum value of around +0.2 volts DC*

Check the operation of the encoder as follows:

Check for pulses when the motor is running. If pulses are present at the motor, but not present at the PWB, check the wiring to the motor and repair or install new wiring. If pulses are present at the PWB, but there is still an error indicating that the motor is failing, install a new driver PWB.

NOTE: *A stepper motor with an internal open circuit may appear to be fully functional under dC330 component control. However, under normal operation it will run with intermittent failure. Use the multimeter to check stepper motor coil resistance.*

1. Refer to Figure 1 as an example. Disconnect PJ111. Check the +24V supply and the phase pulses to GND when the component control code for the motor is entered. If the supply and pulses are present, install a new motor.
2. Check the connectors and wiring to the motor. Repair or install new wiring, as necessary.
3. Disconnect PJ11. Check the +24V. If +24V is not present, check the power to the PWB. If the power is good, install a new PWB. Check the phase pulses at the PWB. If the phase pulses are not present at the PWB, install a new PWB.

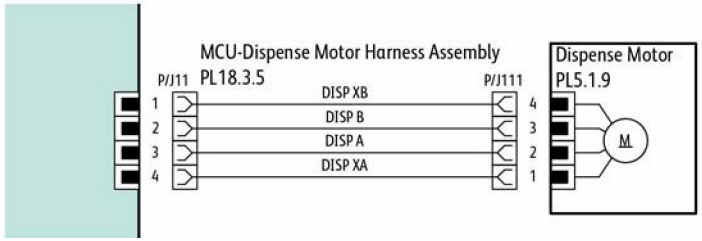

GP 11 How to Check a Sensor

Use this procedure to check the operation of all types of sensor.

NOTE: *Some sensors have a resistor within the sensor and other sensors require a resistor on the PWB. The resistor limits the current through the LED. The voltage to the sensor LED with an external resistor, is typically 1.2V.*

NOTE: *The voltages, PJ numbers, pin numbers and PWB names shown are examples only. Go to the wiring diagram associated with the RAP for the correct information.*

NOTE: *In some cases, two sensors are used to form an interruptible beam of light. In these cases, the LED of one sensor and the sensing element of the other sensor are used. Treat the two sensors as if they were housed in the same body for diagnostic purposes, ignoring the unused part of each sensor. If the combined sensors do not operate correctly and the beam path is clear of obstruction, it may be necessary to install both new sensors.*

Quick Sensor Check

Enter the component control code for the sensor, refer to dC330. Actuate the sensor. If the display changes, the sensor operates correctly. If the display does not change, perform the procedure.

Procedure

For the sensor in the example wiring diagram shown in Figure 1:

1. Actuate the sensor and check for a change in voltage at PJ27, pin 3. If the voltage changes, install a new PWB. If the voltage does not change, continue to the next step.
2. Disconnect PJ271 at the sensor. Check for +3.3V and 0V (GND) on the harness (between pins 2 and 3). If the voltage is correct, replace the sensor. If voltage is not present, go to the next step.
3. Disconnect PJ27 and PJ271. Check the harness and the connectors for continuity. Repair or replace the harness if continuity test indicates an open wire. If harness is good, go to the next step.
4. Check for +3.3V and 0V (GND) between pins 2 and 3. If voltage is not correct, replace the PWB.

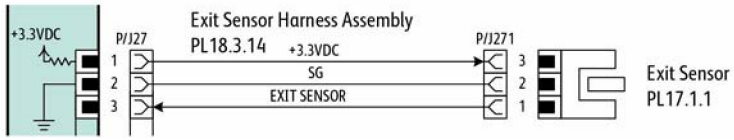

GP 12 How to Check a Solenoid or Clutch

Use this procedure to check a clutch or solenoid.

Initial Actions

WARNING

Switch off the electricity to the machine. Disconnect the power cord from the customer supply while performing tasks that do not need electricity. Electricity can cause death or injury. Moving parts can cause injury.

1. For a clutch, check that the shafts, gears, rolls etc., associated with the clutch are free to rotate, clean and lubricated where applicable.
2. For a solenoid, check that the solenoid is free to actuate and that the mechanisms associated with the solenoid are free to move.

Procedure

NOTE: *The voltages, PJ numbers, pin numbers and PWB names shown are an example only. Go to the wiring diagram associated with the RAP for the correct information.*

NOTE: *When a solenoid is energized in diagnostics, movement is seen. When a clutch is energized in diagnostics, the sound of the clutch action is heard. If possible, run the motor connected to the clutch to confirm when the clutch is energized*

1. Enter the dC330 output code for the clutch or solenoid. If the clutch or solenoid does not energize, continue with step 2.
2. Refer to Figure 1 (as an example). Disconnect PJ17, check for +24V at pin 1 on the wiring side of the connector, If the voltage is correct, replace the solenoid or clutch.
3. Reconnect PJ17, enter the dC330 output code for the clutch or solenoid, while measuring the voltage between pin 1 and ground. If the voltage does not change when the code is entered, install a new PWB.
4. If the fault is intermittent, perform the actions that follow:
   a. Check the wiring. Repair or replace as necessary.
   b. Operate the clutch or solenoid under normal running conditions. If the clutch or solenoid operates intermittently or with hesitation, install new parts.
   c. Check that the clutch or solenoid has enough drive to operate the mechanism to which it is attached; if necessary, install a new clutch or solenoid.

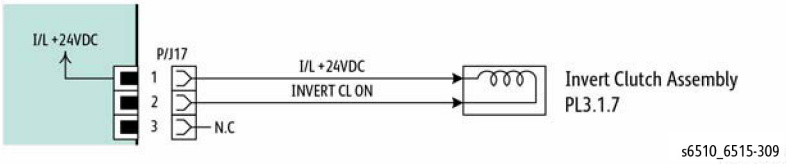

GP 13 How to Check a Switch

Use this procedure to check the operation of a switch.

NOTE: *Figure 1 shows an interlock switch actuated by the closing of a door.*

Initial Actions

WARNING

Switch off the electricity to the machine. Disconnect the power cord from the customer supply while performing tasks that do not need electricity. Electricity can cause death or injury. Moving parts can cause injury.

Manually check that the switch operates. Ensure that the magnet or other actuator has enough mechanical movement to operate the switch.

NOTE: *The voltages, PJ numbers, pin numbers and PWB names shown are an example only. Go to the wiring diagram associated with the RAP for the correct information.*

Procedure

1. Enter dc330 diagnostics and enable the component control code for the switch to test. Actuate the switch. If the display changes, the switch operates correctly. If the display does not change, perform the following steps.
2. Inspect the mechanism intended to actuate the switch. Adjust, repair or replace the part as needed if it is not actuating the switch.
3. Disconnect the switch and measure the resistance between the two connector pins. If it does not change from infinite to 0 ohms as the switch is actuated, replace the switch. If the resistance changes correctly, go to the next step.
4. Check the continuity of the wire harness between the switch and its control PWB. If open, repair or replace the harness.
5. If the switch and wire harness have tested good, replace the PWB that the switch is connected to.

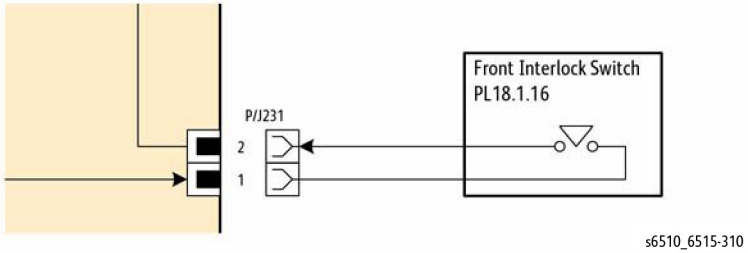

GP 14 How to Clone Device Settings

Purpose

Use this procedure to create a copy of one device's configuration settings and distribute these settings to multiple devices on the network. This cloning process can also be used to backup and restore network settings lost during a software reload, and to copy configuration settings from one printer to another printer on the same network

NOTE: *To establish a direct Ethernet connection between the PWS and printer requires the a crossover cable and the PWS.*

NOTE: *Before using the clone feature, ensure that the source printer clone file is compatible with the destination printer.*

To clone the printer settings:

1. At your computer, open a Web browser. In the address field, type the IP address of the printer, then press or.
2. In the Embedded Web Server, log in as a system administrator. For details, refer to ***Logging In as the Administrator*** in the appropriate User Guide (SFP) or (MFP).
3. At the bottom of the Home page, click.
4. To install a clone file:
   a. For Install Clone File, click.
   b. Locate, then select a clone file from the source printer, then click.
      - To select a different clone file, click the change file icon.
      - To remove the selected clone file, click the icon.

      NOTE: *Removing the clone file does not delete it from the computer.*

   c. To install the selected clone file, click.
5. To create a clone file:
   a. Select the parameters to clone from this printer.
      - To select individual parameters to clone from this printer, select the desired parameter.
      - To choose all settings, select.
      - To clear all settings, clear.
   b. Click.
   c. If prompted, save the clone file to a location that you can remember easily when you need the file for installation.

   NOTE: *If you are not prompted to save the file, look for it in the Downloads folder on your computer.*
6. When you are finished creating or installing a clone file, click.

GP 15 Special Boot Modes

Purpose

The MFP and SFP Boot Mode procedures explain how to start up the printer in various modes, different from its default mode, to enable special operations. These special boot modes are available by turning ON the power while pressing and holding down specified buttons on the Control Panel.

NOTE: *Several Boot Mode function names appear in the MFP or SFP displays using the term "HDD" referring to a hard disk drive. However, these printers use EMMC Boards in place of HDDs and will behave as described in this section.*

MFP Procedure

1. Enter the Special Boot Mode.
   a. With the printer power off, press and at the same time and hold for more than five seconds.
   b. Release the buttons when the following window appears:

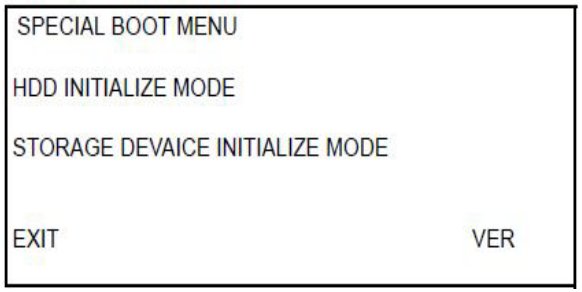

2. Enter the next level of the menu.
   a. Touch the anD characters in, and press at the same time.

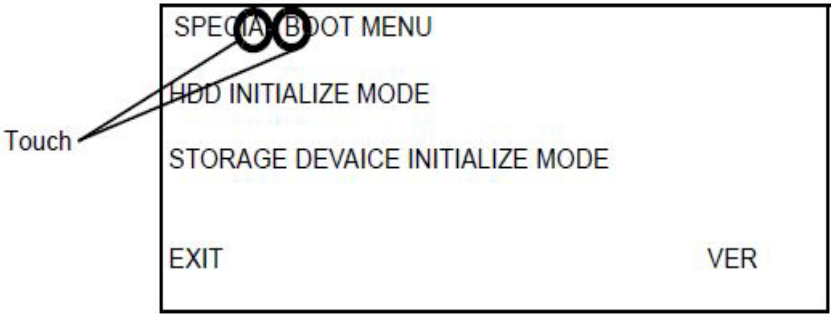

   b. Enter the Pass code 6789#.
   c. The following window appears listing the available Boot Modes. See Table 1 and Table 2 for information about MFP Boot Modes at the initial or next level of the menu.

SPECIAL BOOT MENU 1/3
DOWNLOAD MODE
LONGDAIAG MODE
01. JOB LOG CLEAR MODE
02. FACTOR CLEAR MODE
↓
EXIT

SPECIAL BOOT MENU 2/3
↑
03. NVRAM INIT MODE
04. HDD FORMAT MODE
06. HDD INITIAIZE MODE
↓
EXIT

SPECIAL BOOT MENU 3/3
↑
SKIP INSTALL WIZARD
EXIT

Table 1

HDD INITIALIZE MODE	--BOOT MODE-- HDD INITIALIZE MODE ARE YOU SURE? YES NO	Initializes the Spool Area (EMMC Board). Initialization is performed for the predetermined area of EMMC Board partition, and the area other than this area is not influenced.

Table 1

STORAGE DEVICE INITIALIZE MODE	--BOOT MODE-- STORAGE DEVICE INITIALIZE MODE ARE YOU SURE? YES NO	Formats the EMMC Board by force. This operation forcibly sets the EMMC Board partition condition to the setting used at shipment.

Table 2

DOWNLOAD MODE	--BOOT MODE-- DOWNLOAD MODE ARE YOU SURE? YES NO	Starts up in Firmware Download Mode. See GP 9, Firmware Version Upgrade.
LONGDIAG MODE	--BOOT MODE-- LONGDIAG MODE ARE YOU SURE? YES NO	Performs a more detailed check than the usual Device diagnostic items at the start up of the machine.
01. JOB LOG CLEAR MODE	--BOOT MODE-- 01. JOB LOG CLEAR MODE ARE YOU SURE? YES NO	Used when the log data has an error and a Fail such as 116-331 has occurred, or when the log data must be cleared for version upgrade that involves a large change in versions.
02. FACTORY INIT MODE	--BOOT MODE-- 02. FACTORY INIT MODE ARE YOU SURE? YES NO	Used when recovery is not achieved with Startup by “03. NVRAM INIT MODE”. This method can also be used to resolve the problem where the internal clock becomes unstable, therefore causing all the functions that use the clock to become unstable when the ESS Board is initialized with the backup battery detached. When an initialization is performed with this method, the same billing mismatch, etc. occurs as after replacing the ESS Board. Note: When performing this Boot Mode on a printer after replacing the IIT, perform a parameter setup for the IIT again according to the instruction sheet included with the replacement IIT.
03. NVRAM INIT MODE	-BOOT MODE-- 03. NVRAM INIT MODE ARE YOU SURE? YES NO	Initializes the NVM of the configuration range (Printer Settings etc) inside the Controller by force and starts up.

Table 2

04. HDD FORMAT MODE	-BOOT MODE-- 04. HDD FORMAT MODE ARE YOU SURE? YES NO	Formats the EMMC Board by force. This operation forcibly sets the EMMC Board partition condition to the setting used at shipment.
06. HDD INITIALIZE MODE	--BOOT MODE-- 06. HDD INITIALIZE MODE ARE YOU SURE? YES NO	Initializes the Spool Area (EMMC Board). Initialization is performed for the predetermined area of EMMC Board partition, and the area other than this area is not influenced.
SKIP INSTALL WIZARD	--BOOT MODE-- SKIP INSTALL WIZARD ARE YOU SURE? YES NO	The function started without displaying INSTALL WIZARD.

SFP Procedure

To enter Boot Mode:

1. See Table 3 for information about SFP Boot Modes and for the Special Keys used to enter each Boot Mode.
2. With the printer power off, press the (in the 2nd column) and at the same time, then release all keys when appears in the display.
3. Within several seconds, the specific boot mode operation will begin to occur. Allow the printer to reboot or follow directions on the display as indicated.

Table 3

DOWNLOAD MODE	OK + Cancel Job	--BOOT MODE-- DOWNLOAD MODE	Starts up in Firmware Download Mode. See GP 9, Firmware Version Upgrade.
HDD INITIALIZE MODE	Information + Print Setting	--BOOT MODE-- HDD INITIALIZE MODE	Initializes the Spool Area (EMMC Board). Initialization is performed for the predetermined area of EMMC Board partition, and the area other than this area is not influenced.
NVRAM INIT MODE	Information + Up Arrow	--BOOT MODE-- NVRAM INIT MODE	Initializes the NVM of the configuration range (Printer Settings etc) inside the Controller by force and starts up.
LONGDIAG MODE	Information + OK	--BOOT MODE-- LONGDIAG MODE	Performs a more detailed check than the usual Device diagnostic items at the start up of the machine.

Table 3

HDD INITIALIZE MODE	Information + Down Arrow	--BOOT MODE-- HDD INITIALIZE MODE	Initializes the Spool Area (EMMC Board). Initialization is performed for the predetermined area of EMMC Board partition, and the area other than this area is not influenced.
JOB LOG CLEAR MODE	Information + Left Arrow	--BOOT MODE-- JOB LOG CLEAR MODE	Used when the log data has an error and a Fail such as 116-331 has occurred, or when the log data must be cleared for version upgrade that involves a large change in versions.
HDD FORMAT MODE	Information + Up Arrow + Down Arrow	-BOOT MODE-- HDD FORMAT MODE	Formats the EMMC Board by force. This operation forcibly sets the EMMC Board partition condition to the setting used at shipment.
FACTORY INIT MODE	OK + Up Arrow + Down Arrow	--BOOT MODE-- FACTORY INIT MODE	Used when recovery is not achieved with Startup by “NVRAM INIT MODE”. This method can also be used to resolve the problem where the internal clock becomes unstable, therefore causing all the functions that use the clock to become unstable when the ESS Board is initialized with the backup battery detached. When an initialization is performed with this method, the same billing mismatch, etc. occurs as after replacing the ESS Board.

GP 16 Separate System Modules

Use this procedure to remove option feeder from the printer.

Description

Many service procedures require separation of the option feeder from the printer.

WARNING

Switch off the electricity to the machine GP 4. Disconnect the power cord from the customer supply while performing tasks that do not need electricity. Electricity can cause death or injury. Moving parts can cause injury.

CAUTION

Always move the printer separately from the optional tray.

1. Refer to Figure 1 to clear the media path and output trays.

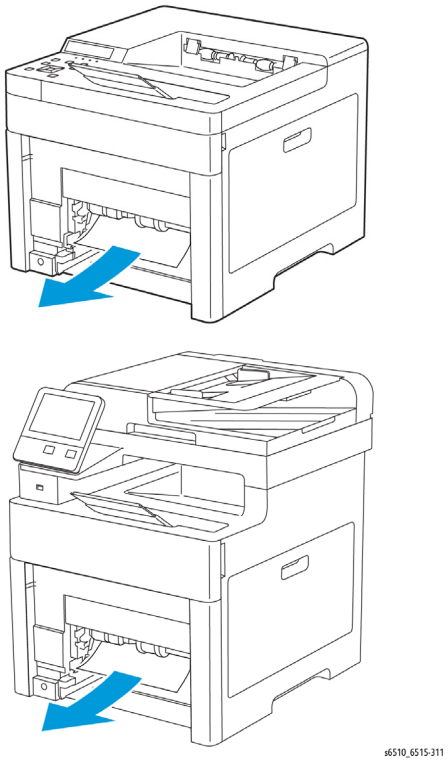

Figure 1 Clear the Media Path and Output Trays

2. Refer to Figure 2 to locate and toggle the slider switch to the unlocked position before separating the printer and optional trays.

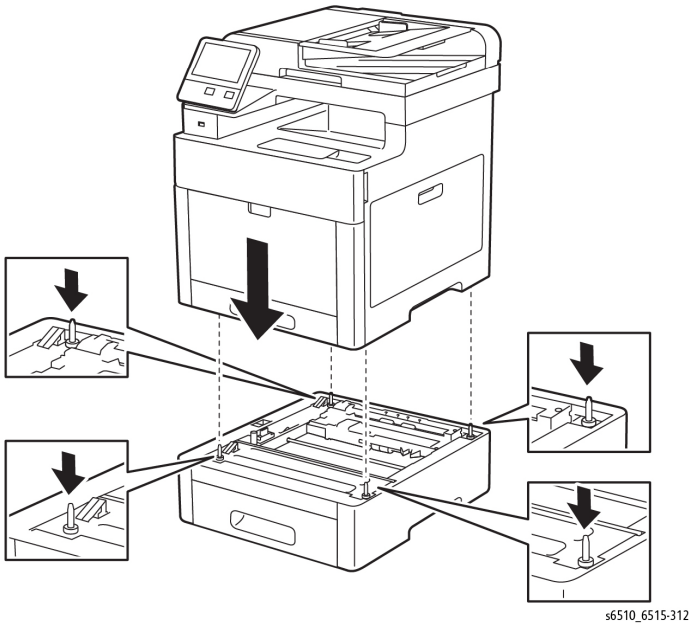

Figure 2 Separate Optional Feeder Assembly from the Printer

3. Lift the module to clear the support brackets.
4. Place the module on a suitable work surface to avoid damage.
5. Check the position of the option connector before reassembly.

GP 17 External Fax Line Test

When the customer reports a fax issue sometimes it is very difficult to determine if the problem is with the customers phone line or the Xerox machine.

The preferred method of verifying the phone line functionality is to use the Modem saver device part number 600T2133 to ensure the fax line is wired correctly and to use the Analog hand set part number 600T1937 or customer's analog phone to place calls on the line. Be sure that both local and long distance calls can be placed and the line quality is clear, no static.

Use Handset:

- Can it dial externally on the line?
- Can it receive a call on the line?
- Evaluate Line quality. Check Line for unwanted beeps, or noise.

Use Breakout Box to measure voltages (Use the machine chassis as ground). Refer to Fax 101 training for Breakout Box usage instruction:

- Check ground continuity.
- Line Voltage -20 to -50 VDC?
- Loop Current 15 to 95 mA DC?
- Ring Signal 50 to 90 VAC?
- Check Ring-Ground and Tip-Ground <1VAC

If a line quality issue or incorrect voltage is found then the customer will need to resolve these problems.

GP 18 Printing Reports

Purpose

To list reports available from the printer Control Panel, refer to GP 3. More information can be found in the User Guide.

- Configuration Report
- Billing Summary
- Supplies Usage Report
- Postscript Font List
- PCL Font List
- Demonstration Print
- Startup Page
- Job History Report

GP 19 Intermittent or Noise Problem

Purpose

The purpose of this RAP is to provide guidance for resolving an intermittent or noise problem. This is not an exact procedure, but a set of recommended actions that use the resources of the service manual to help locate the cause of an intermittent or noise problem.

Procedure

1. Check the service log. Recent service actions may provide information about the problem. For example, a component that was recently replaced to correct another problem may be the cause of the new intermittent problem.
2. Noise problems may be due to improper installation. Check for packing materials that have not been removed. Check for loose or missing hardware.
3. Run the printer in a mode that vigorously exercises the function that is suspected. The printer may fail more frequently or may fail completely under these conditions. Look for signs of failure or abnormal operation.

   An intermittent problem can usually be associated with a RAP, since when it does fail, it results in a fault code, a jam code, or some other observable symptom.
4. Using the RAP that is associated with the symptom of the intermittent problem, examine all of the components that are referenced in the RAP. Look for:
   - contamination, such as a feed roller that has a build up of dirt or toner
   - wear, such as gear teeth that are rounded or have excessive backlash
   - wires chafing against components of the machine, especially against moving components
   - misaligned, mis-adjusted, or incorrectly installed components
   - slow or slipping clutches; slow or binding solenoids
   - damaged components
   - excessive heat, or symptoms of excessive heat, such as the discoloration of a component
   - loose cables or wires
5. Using the RAP that is associated with the symptom of the intermittent problem, perform all of the adjustments for the components or functions that are referenced in the RAP. Check to ensure that the adjustment can be made and that there is an adequate range of adjustment, and that it can be set to or near the nominal value. Any abnormality that is observed may be an indication of the cause of the problem. For example, a component can be adjusted to the nominal value, but it is at the limit of the adjustment range. This is not normal and may be an indication of the cause of the problem.
6. Operate all of the components in the appropriate RAP that is associated with the symptom of the intermittent problem with Component Control. Observe the components for any symptoms of abnormal operation, such as a hesitation, or an unusual sound.
7. Check that the AC and DC power are within specification.
8. Get technical advice or assistance when it is appropriate. This will depend upon the situation and the established local procedures.
9. Examine the components that are not in the RAP, but are associated with the function that is failing. Refer to the BSDs. Look for:
   - contamination, such as a feed roller that has a build up of dirt or toner
   - wear, such as gear teeth that are rounded or have excessive backlash
   - wires chafing against components of the machine, especially against moving components
   - misaligned, mis-adjusted, or incorrectly installed components
   - slow or slipping clutches; slow or binding solenoids
   - damaged components
   - excessive heat, or symptoms of excessive heat, such as the discoloration of a component
   - loose cables or wires
10. Perform the adjustments for the components that are not in the RAP, but are associated with the function that is failing. Refer to the BSDs. Check to ensure that the adjustment CAN BE MADE and that there is an adequate range of adjustment, and that it can be set to or near the nominal value. Any abnormality that is observed may be an indication of the cause of the problem. For example, a component can be adjusted to the nominal value, but it is at the limit of the adjustment range. This is not normal and may be an indication of the cause of the problem
11. Operate all of the components that are not in the RAP, but are associated with the function that is failing with Component Control. Refer to the BSDs. Observe the components for any symptoms of abnormal operation, such as a hesitation, or an unusual sound.
12. Replace any components or consumables that are known to be a frequent cause of the problem. When doing this, consider the cost and time required. If the suspected item is inexpensive, can be installed quickly, and has a high probability of resolving the problem, then it is reasonable to replace it.
13. Leave an accurate and detailed record of your actions in the service log. Describe what you have observed, what actions you took, and the recommended next steps.

GP 20 How to Safely Lift or Move the Printer

Use this procedure when lifting or moving heavy modules.

Description

Most service procedures for the optional feeder module requires separation of the printer and feeder. Feeder removal requires two people.

WARNING

Do not attempt to remove or lift the following component with less than 2 people. The component is very heavy and requires at least 2 people to lift or remove it. Any attempt to remove or lift the component with less than 2 people could result in serious personal injury.

CAUTION

Always move the printer separately from the optional tray unless the optional stand is installed.

Lift the printer firmly by gripping the recessed areas on both sides of the printer. Never lift the printer by gripping any other areas.

CAUTION

Failure to properly repackage the printer for shipment can result in damage to the printer. Printer damage caused by improper packaging is not covered by the Xerox warranty, service agreement, or Total Satisfaction Guarantee.

When moving the printer or removing heavy modules, observe the following:

1. Locate a suitable stable surface to support the module after removal.
2. The support surface height is between 750 mm and 1000 mm (30" and 39").
3. Check there are no hazards or obstacles between the printer and support surface.

CAUTION

If the optional Productivity Kit (HD) is not installed, ensure that the Ready LED is off before you turn off the printer. The data in the memory is cleared when the printer is turned off.

4. Turn off the printer and disconnect the power cord and other cables from the back of the printer.
5. Remove any paper or other media from the output tray. If the output tray extension is extended, close it, Figure 1.

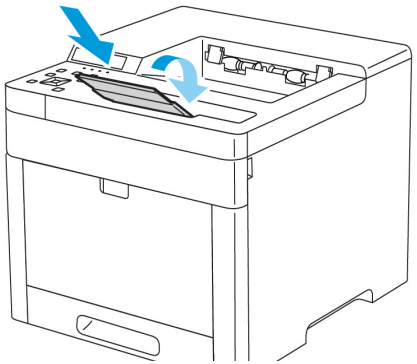

Figure 1 Close the Output Tray Extension

6. Remove the paper from the paper tray, Figure 2. Keep the paper wrapped and away from humidity and dirt.

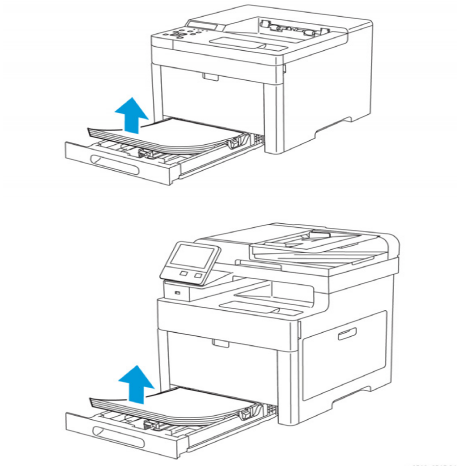

Figure 2 Remove Paper from the Paper Tray

7. Lift and carry the printer as shown in Figure 3.

Figure 3 Printer Lifting Technique

NOTE:

- *When moving the printer, do not tilt it more than 10 degrees to the front, back, left, or right. Tilting the printer more than 10 degrees can cause toner spillage.*

8. After moving the printer:
   a. Reinstall any parts you removed.
   b. Reconnect the printer to the cables and power cord.
   c. Plug in and turn on the printer.

GP 21 Machine Lubrication

Purpose

To give information on the use of lubricants.

Procedure

CAUTION

Only use lubricants as directed. Incorrect use of lubricants could seriously affect the performance of the machine.

Take the following precautions when performing machine lubrication:

- Wear disposable gloves.
- Only use lubricants that are specified in the procedure.
- Only lubricate parts as directed.
- Apply only the smallest amount of lubricant, sufficient to lubricate the parts. To prevent contamination, remove any surplus lubricant.
- Take great care not to contaminate other parts with the lubricant.

GP 22 Installation Space Requirements

WARNING

Do not work in a confined space. 1 m (39 inches) space is needed for safe working.

WARNING

USA and Canada. Do not install this machine in a hallway or exit route that does not have 1.12 m (44 inches) of space additional to the normal space requirements in front of the machine. To conform with fire regulations this additional 1.12 m (44 inches) of space is needed in front of the machine in hallway and exit route

Dimensions/Mass of Printer

Refer to Table 1 for the printer mass. The dimensions shown in Figure 1 and Figure 2 are with Bypass Tray cover, ejection stacker, and scanner cover closed.

Table 1

WorkCentre 6515	31 kg (68 lb.)
WorkCentre 6515 w/ 550-sheet feeder	38 kg (84 lb.)

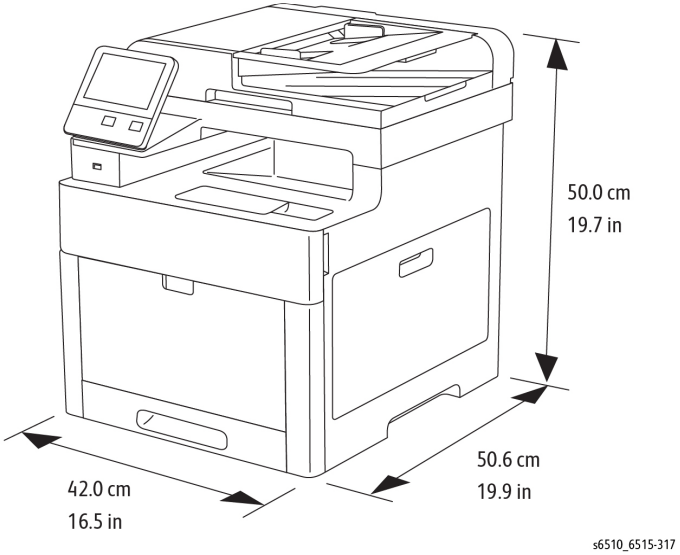

Figure 1

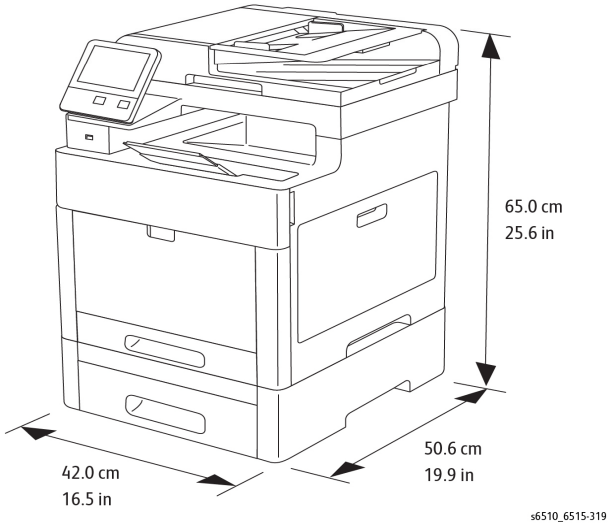

Figure 2

Installation Clearance Requirements

This section shows the required installation space needed to properly operate and service the machine.

1. In order to function properly, the printer must be placed on a flat surface with the following minimum clearances shown in Figure 2 (WorkCentre 6515) and Figure 4 (WorkCentre 6515 with option 550-sheet feeder).

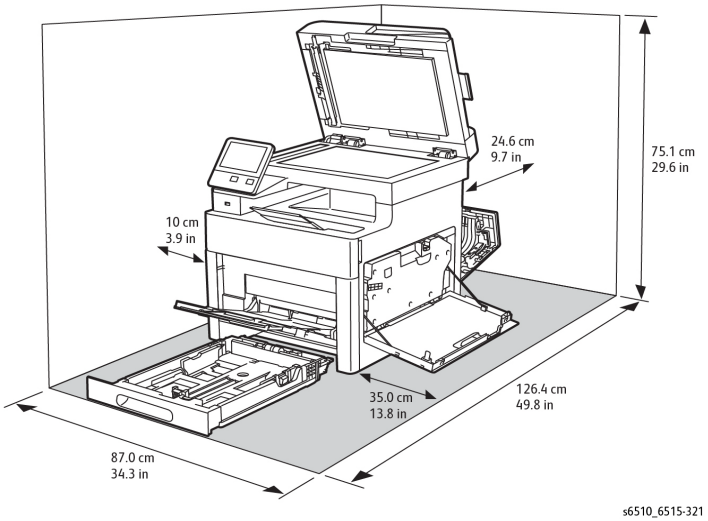

Figure 3

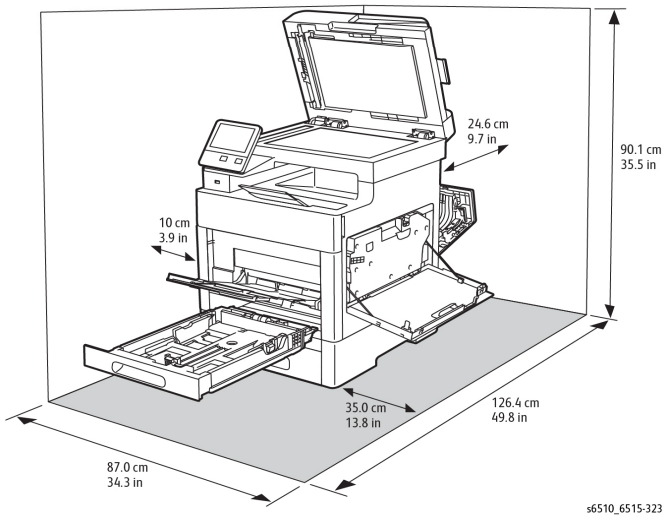

Figure 4

2. Mounting surface flatness must be within the specified range.
3. The printer must not be tipped or tilted more than 10 degrees in any direction Figure 5.

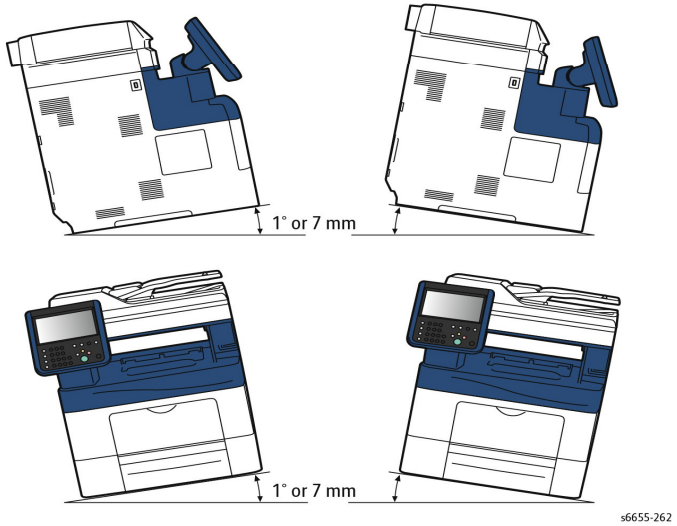

Figure 5

GP 23 First Print Output Time

Purpose

From Ready State

First Print Output Time (FPOT) is defined as the time from when the engine receives a Start signal in Ready state, until a single page is printed and delivered to the output tray (Table 1).

From Sleep State

First Print Out Time includes the time required to print any maintenance pages (such as the configuration page) and a single customer page on A size media from Tray 2 (Table 1).

Table 1 First Print Output Time FPOT

Color Mode	FPOT (Ready)	FPOT (Power Saver/ Sleep) ~30mins	FPOT (from cold)
B/W	10 sec.	24 sec.	53 sec.
Color	11 sec.	27 sec.	53 sec.

GP 24 Restriction of Hazardous Substances (RoHS)

Purpose

To give information on the RoHS Directive.

The RoHS Directive restricts the use of certain hazardous substances in electrical and electronic equipment. It applies to equipment placed in the European Union (EU) market. The directive takes effect from 1st July 2006.

NOTE: *Currently these restrictions are only for the European Union (EU) market and some associated countries. For more information go to www.Xerox.com.*

The hazardous substances are:

- Lead (Pb)
- Mercury (Hg)
- Cadmium (Cd)
- Hexavalent Chromium (Cr 6+, Cr [VI])
- Polybrominated Diphenyl Ethers (PBDE's)
- Polybrominated Biphenyls (PBB's)

Identification of a RoHS Compliant Machine

Xerox maintains a central list of RoHS compliant printers. This general procedure is for information only. All current-model WorkCentre printers are RoHS compliant.

GP 26 Media Specifications

The media trays accommodate most sizes and types of paper or other specialty media. Print the Paper Tips page for a list of supported media.

Media that May Damage to the Printer

The printer can use a variety of media for print jobs. However, some media can cause poor output quality, increased jams, or damage. Unacceptable media includes:

- Rough, plastic, or porous media
- Transparency
- Paper that has been stapled, folded, photocopied, or wrinkled
- Envelopes with windows, metal clasps, padding, or adhesives with release strips
- CD labels
- Media that is less than 60 g/m2 or more than 220 g/m2

Media Storage Guidelines

If media handling problems are common, review these storage guidelines with the customer.

- Store media in dark, cool, relatively dry locations. Most media is susceptible to damage from ultraviolet (UV) and visible light. UV radiation, emitted by the sun and fluorescent bulbs, is particularly damaging to media. The intensity and length of exposure to visible light should be reduced as much as possible.
- Maintain constant temperatures and relative humidity
- Avoid attics, kitchens, garages, and basements. Inside walls are drier than outside walls where moisture can collect.
- Store flat. Media should be stored on pallets, cartons, shelves, or in cabinets.
- Do not open sealed packages until needed. Leave media in the original packaging. For most commercial grades, the wrapper's inner lining protects the media.

Supported Media

For more detailed information about supported paper and other media, print the Paper Tips page:

1. On the Control Panel, press the button.
2. Select, and then press the button.
3. Select, and then press the button.
4. Select, and then press the button to print.

See also: Recommended Media List at www.xerox.com/paper

Tray Capacity

Table 1 lists tray capacities.

Table 1 Tray Capacity

Media/Weight	Bypass Tray	Tray 1	Optional Tray	DADF Input
Standard Paper	150 Sheets	250 Sheets	550 Sheets	50 sheets
Envelope	10 (approx.)	0	0	0

Table 1 Tray Capacity

Media/Weight	Bypass Tray	Tray 1	Optional Tray	DADF Input
Weight	60-216 g/m2	60-216 g/m2	60-105 g/m2	75-105 g/m2 60-105 g/m2 duplex

Print Image Quality

Image Quality Guarantee Conditions

The image quality is specified and guaranteed under the conditions shown in Table 2.

Table 2 Print Image Quality Specifications

Item	Specification
Environmental conditions	Environment condition for evaluating image quality Temperature: 15-28degC Humidity: 20-70%RH
Guaranteed paper	The print quality defined in this chapter is guaranteed when standard paper is used in the tray.
Paper condition	The paper used is fresh paper immediately after unpacked, which has been left in the operating environment for 12 hours before unpacking.
Printer condition	The print image quality specified in this section is guaranteed with the printer in normal condition.
Image quality guaranteed area	The print image quality specified in this section is guaranteed in the guaranteed image quality area specified in this manual.
Criterion	The print image quality is guaranteed with the Spec. In rate = 90% (g = 90%).

GP 27 Environmental Data

Operating Environment Specifications

The printer should be stored and operated under the environmental conditions shown in Table 1:

Table 1 Operating Environment

Characteristic	Specification
Installation Temperature / Humidity	Installation temperature and humidity on the condition without condensation is as follows. Operating: 5-32degC, 15-85%RH (No condensation) Storage: minus 20-40degC, 5-85%RH (No condensation)
Installation Altitude	0 to 3,100m (0 - 10,170 ft)
Installation Horizontally	Longitudinal levelness of table surface on which the printer is installed Longitudinal: 1 degree or under Lateral: 1 degree or under
Storage Temperature of a Toner Cartridge	The guaranteed period of the Toner Cartridge before unpacked is as follows: Normal conditions: 24 months under 5 to 32degC, 15 to 85%RH. Harsh conditions: 1 month under -20 to 0degC and 35 to 40degC, 5 to 15%RH and 80 to 90%RH. The storage altitude shall be 0 to 3,100m. Can be extended to 0 to 15,000m when shipped by air. (Provided that the cargo bay is pressurized to 70.9275Kpa or higher.
Acoustic Noise Sound Pressure (Decibels)	Operation: 56.0 dB Standby or Ready: 30.0 dB

Safety / Environment Conditions

The printer meets the safety and environmental standards shown in Table 2:

Table 2 Safety / Environment Conditions

	100-127V M/C	220-240V M/C
Safety Standard	UL60950-1, CSA 22.2 60950	IEC60950-1 / EN60950-1
Laser Safety Standard	FDA21CFR Chapter 1, Subchapter J, Section 1010, 1040	IEC60825-1 Amendment 1 + Amendment 2 / EN60825-1 Amendment 1 + Amendment 2 Class 1 Laser Product
EMI	FCC Part15 Subpart B, Class A	EN55022:2006, Class A

Noise Levels

The printer's noise levels during operation and standby are shown in Table 3:

Table 3 Noise Levels

Operating Mode	Sound Power (B)	Sound Pressure (dB)
Running	7.15B	53dB
Standby	4.14B	25.1dB

GP 28 Supplies Plan Conversion

Purpose

This procedure explains how to set the supplies plan and region if necessary.

Procedure

1. Connect to the device's Embedded Web Server.

   NOTE: *In order to complete the next few steps, it may be necessary to log in as Admin.*

2. From the Home page, click on DETAILS to the right of the SUPPLIES heading.
   On the left side of the screen are several buttons for the categories of features.
   Within each category are of features. Each contains one or more.
3. Scroll to the bottom and select SUPPLIES PLAN.

NOTE: *Enter the passcode within 500 page counts of when it was issued, or it will not be valid.*

4. Call Field Engineering or your NTS and provide the Device Serial Number and Total Impressions that are displayed on the Supplies Plan Screen. You will receive a 6 character plan conversion code.
5. Enter the passcode string provided in step 4 and click on APPLY.

GP 29 How to Check a Dispenser Motor

Purpose

This procedure explains how to check the operation of the Dispenser Motors and related gears. This is typically done when an error is caused from an amount of toner in the Imaging Unit's developer assembly that is insufficient to maintain density. The two likely causes are, the Print Cartridge is not fully seated, or the replenisher assembly is not functioning correctly.

Procedure

WARNING

Switch off the electricity to the machine. Disconnect the power cord from the customer supply while performing tasks that do not need electricity. Electricity can cause death or injury. Moving parts can cause injury.

1. Enter the Diagnostics,GP 1.
2. Select dC330 Component Control.
3. Remove the affected toner cartridge (e.g., Cyan)
4. Select code 041-001 for the 24V low voltage power supply.
5. Select the code for an unaffected toner dispenser motor (e.g., Yellow: 93-004) and listen to the gear movement. It should be smooth and relatively quiet. You can also look at the toner gear movement on the left side of the machine where the toner is dispensed.
6. Turn off the unaffected toner dispenser motor (e.g., Cyan: 93-008).
7. Turn on the affected toner dispenser motor and listen to, or watch, the gear movement. If there is clicking or chattering, the problem is related to the toner dispenser assembly.
8. Turn off the affected toner dispenser motor and the low voltage power supply.
9. Select Close to exit the routine.
10. Exit the Diagnostics GP 1.

GP 30 IP (ESS) Specifications

Support OS

The machine supports the following operation systems with the latest service pack.

- Microsoft Windows XP (32bit / 64bit)
- Microsoft Windows Server 2003 (32bit / 64bit)
- Microsoft Windows Vista (32bit / 64bit)
- Microsoft Windows Server 2008 (32bit / 64bit)
- Microsoft Windows Server 2008 R2 (64bit)
- Microsoft Windows 7 (32bit / 64bit)
- Mac OS X 10.3.9/10.4/10.5 (PPC/x86)
- Mac OS X 10.6/10.7 (x86/x64)
- Red Hat Enterprise Linux 5/6 Desktop (x86)
- SUSE Linux Enterprise Desktop 10/11 (x86)

Interface Port

See the following tables for interface port specifications:

- Table 1 USB Type-B Interface Port Specifications
- Table 2 USB Type-A Interface Port Specifications
- Table 3 Ethernet Interface Port Specifications
- Table 4 Wireless Interface Port Specifications

USB

Table 1 USB Type-B Interface Port (Front)

Item	Specification
Connector	One Type-B connector
Protocol	Hi-speed USB 2.0 compatible

Table 2 USB Interface Port (Back)

Item	Specification
Connector	One Type-B Connector/One Type-A Connector
Protocol	Hi-speed USB 3.0 (target) / USB 2.0 (host)

Ethernet

Table 3 Ethernet Interface Port Specifications

Item	Specification
Connector	One RJ-45 connector
Protocol	10/100 Base-TX and Gigabit Ethernet

Wireless

Wireless adapter is required.

Table 4 Wireless Interface Port[a] Specifications

Item	Specification
Connectivity Technology	Wireless (Standard on DNi, option for D and DN models)
Compliant Standards	IEEE802.11 n/g/b
Band width	2.4-GHz and 5-Ghz
Data Transfer Rate	IEEE802.11n mode: 65 Mbps IEEE802.11g mode: 54, 48, 36, 24, 18, 12, 9, 6 Mbps IEEE802.11b mode: 11, 5.5, 2, 1 M bps
Protocol	See “Network Protocol” for details
Device Type	Wireless Adapter
Security Protocol	64(40-bit key)/128(104-bit key) WEP,WPA-PSK(TKIP,AES), WPA2-PSK(AES), WPA-Enterprise(TKIP,AES), WPA2-Enterprise(AES) (EAP method supports PEAPv0 only)
Wifi Protected Setup (WPS)	Push Button Configuration (PBC), Personal Identification Number (PIN)

a. Connection to the Linux machine is not guaranteed. Only for infrastructure connection and when Linux terminal is connected with Wired LAN connection.

Network Protocol

Printing Protocol

Printing protocol is shown in Table 5:

Table 5 Printing Network Protocol

Protocol	Transport	Maximum Sessions	Remarks
Port9100	TCP/IP	1	Windows XP/Server2003/Vista/ Server2008/ 7/ Server2008 R2 Mac OS X
LPD	TCP/IP	10	Windows XP/Server2003/Vista/ Server2008/ 7/ Server2008 R2 Mac OS X Linux
IPP/IPPS	TCP/IP	5	Windows XP/Server2003/Vista/ Server2008/ 7/ Server2008 R2 Mac OS X
SMB	TCP/IP	5	Windows XP/Server2003/Vista/ Server2008/ 7/ Server2008 R2
Web Services on Devices	TCP/IP	2	[Print]:Windows Vista / Server2008/ 7 / Server2008 R2 [Scan] : Windows Vista / 7

Control and Management Protocol

Control and management protocol is shown in Table 6:

Table 6 Control and Management Network Protocol

Protocol	Transport	Application / Usage	Remarks
HTTP/HTTPS	TCP/IP	EWS	
SMTP	TCP/IP	E-Mail Alert	
SNMP v1/v2c/v3	UDP/IP	Driver, Installer, Management	SNMP v3 Default OFF
DHCP	UDP/IP	IP setup	
BOOTP	UDP/IP	IP setup	
RARP	TCP/IP	IP management	
AutoIP	TCP/IP	Installer (Device discovery)	
WINS	TCP/IP	IP setup	
Telnet	TCP/IP	IP management	
Bonjour (mDNS)	UDP/IP	IP setup for Mac	
LDAP	TCP/IP	Address Book,ColorTrack Pro1.1	
LDAPS	TCP/IP	Address Book,ColorTrack Pro1.1	
DNS	TCP/IP	IP management	
DDNS	TCP/IP	IP management	Default OFF
SNTP	TCP/IP	IP management	Default OFF
FTP	TCP/IP	IP management	

MIB

The following MIBs are supported.

- RFC1213 MIB-II
- RFC1514 HostResources
- RFC1759 Printer MIB
- Printer port monitor MIB
- XCMI MIB

Decomposer

PDL

The PDL decomposer specifications are shown in Table 7:

Table 7 PDL Decomposer Specifications

PDL	Interface		Remark
	USB I/F Net	USB Storage	
PCL 5c	Yes[a]	No	
PCL 6	Yes	No	SupportOS: Windows XP/Server 2003/Vista/Server 2008/ 7 / Server2008 R2
PostScript	Yes	No	SupportOS: Mac OS X(10.3.9/10.4/10.5/10.6/10.7), Linux, Windows XP/Server2003/ Vista / Server2008 / 7 / Server2008 R2

Table 7 PDL Decomposer Specifications

PDL	Interface		Remark
	USB I/F Net	USB Storage	
FX-PDF	Yes	Yes	Ver1.6
TIFF	No	Yes	
JPEG	No	Yes	
HBPL	Yes	No	
a. Yes: Supported No: Not supported			

Font

81 fonts and 36 Symbol Sets for PCL, 16 fonts for PDF and 136 fonts for PS3 are available as built-in font.

Image Area

The image area specifications are shown in Table 8:

Table 8 Image Area Specifications

Area Definition	Specification
Usable Area (maximum paper size)	215.9[a] x 355.6 mm
Un-printable Area	Default: 4.0 mm each from four edges of paper
Printable Area	207.7 x 347.4 mm[b]
Print quality guaranteed Area	Same as Printable Area
a. Maximum width 220 mm for Envelope (DL LEF) b. Maximum printable width of paper which paper width is more than 215.9 mm is 210.9 mm. Therefore, Maximum printable area is 210.9 x 361.6 mm.	

Job Control

Print Cancel

A print job in progress can be cancelled from the operator panel.

Job Recovery

When a print job fails due to a recoverable error such as paper jam, the machine recovers the job automatically after the jammed paper is removed.

Job Timeout

When a print job is stopped for a certain period of time (time can be changed at the operator panel, and unlimited also can be selected), the print data of the job is deleted as an error

ColorTrack Pro1.1

Color Track is a function to designate the use of color printing and control print volume per user.

Only the administrator can set restrictions from the EWS.

The user name and password are embedded in the print job to confirm from whom the job is sent. In addition, the user name and password are entered by user from the printer driver.

The printer can support maximum 50 accounts.

When “ColorTrack Mode” is set to “Off”, “Automatic Color to Monochrome Print” setting applies to all users. When “ColorTrack Mode” is set to “Internal Mode” or “External Mode”, “Automatic Color to Monochrome Print” setting applies to Registered Users with “Monochrome Print Only” rights and Non Registered Users.

Secure Print

When the expansion memory (512MB) or HDD is attached, the printer holds print data in memory, including a user password (1~12 digits), a user name and a document name specified in the printer driver The data is not printed until the same password, user name and document name are specified at the printer UI. The data is cleared after being printed. The data remains in the printer as long as it is not cleared. The data on the memory is cleared when the printer is turned off. The data on the HDD is not cleared even the printer is turned off.

Proof Print

When the expansion memory (512MB) or HDD is attached, only the proof print can be selected. When multiple sets of prints are specified in the printer driver, the printer prints only the first set of the print data. Then the user can select whether the remaining sets are printed or not (the remaining data is cleared) when the same user name and document name are entered at the Panel UI. The data remains in the printer as long as it is not cleared. The data on the memory is cleared when the printer is turned off. The data on the HDD is not cleared even the printer is turned off.

IP Filter

The user can select to accept or reject jobs for the specified IP address. Up to 5 IP addresses can be specified. IP filter is available only to LPD and Port 9100.

Virtual Mail Box

When the expansion memory (512MB) or HDD is attached, the Virtual Mail Box can be selected only. There are two type of Virtual Mail Box.

Public Virtual Mail Box

When print job is selected Public (password not needed) in the Stored Print menu on the driver, everyone can print job from operator panel if know user name or file name. And this print job remains till deleted intentionally.

Private Virtual Mail Box

When print job is selected Private (password needed) in the Stored Print menu on the driver, everyone cannot print job from operator panel if unknown password. And this print job remains till deleted intentionally.

Public Mail Box

When the expansion memory (512MB) or HDD is attached, the Public Mail Box can be selected only. When print job is selected “Public Mail Box” in the Job Type menu on the driver, everyone cannot print job from operator panel if unknown password. And this print job remains till deleted intentionally. The data on the memory is cleared when the printer is turned off. The data on the HDD is not cleared even the printer is turned off.

Logging

Job Logging

The machine can retain up to 20 job logs.

Job log is printed instantly by user's request or automatically when the number of the retained job logs has reached 20.

Job log includes the following information.

- Job finish date and time
- Job type (Print/File/FaxSend/FaxReceived/Copy/Scan)
- Input interface (USB, LPD, Port9100)
- Document name (File name)
- Output color
- User name/Host name
- Number of printed sheets (Color, B&W)
- Number of printed impressions (Color, B&W)
- Paper size
- Result (Successful, Error, etc.)

Error Logging

The machine can retain the following errors.

Fatal error: 42 errors at the maximum (10 errors at the minimum)

Jam error: 42 errors

The user can print the error log by the panel operation.

Jam error log includes the following information:

- Date and time when jam has occurred

Jam name Fatal error log includes the following information:

- Date and time when error has occurred
- Error code

Billing Counter

The PV counter counts the number of sheets printed properly (Similar to Odometer) (Table 9).

Table 9 Billing Counter Specifications

Counter	Description
Color PV (7 digits)(KCMY)	Count the number of paper printed in color.
B&W PV (7 digits)(K only)	Count the number of paper printed in B&W.

Table 9 Billing Counter Specifications

Counter	Description
Total PV (7 digits)	Count the total number of paper printed in color and B&W.

ID Print

User name can be printed. The printing position can be selected from upper right, upper left, lower right and lower left (Only for PCL6). The user selects using the operator panel whether user name is printed or not and where it is printed.

Non-Genuine Mode

When a Toner Cartridge has reached end-of-life, the printer stops accepting print requests (Toner Cartridge life is counted by the counter in CRUM). Taking into consideration that some users use refilled Toner Cartridges they get from remanufacturers, the printer can accept a print request by the user' s panel operation even if the life of the Toner Cartridge has ended. Settings of Toner Cartridge can be made separately (settings of Toner Cartridge can not be made by color). When the mode has changed so that the printer does not stop even after life of Toner Cartridge ends, the printer displays a message on the operator panel to inform the user of the mode change. When the printer operates in this mode, print image quality is not guaranteed. Also, remaining toner level is not displayed (as CRUM data can not be guaranteed).

GP 31 IIT Specifications

Scanner

Scanner specifications are shown in Table 1:

Table 1 Scanner Specifications

Item	Specification
Scanning Method	Platen: Document-fixed flatbed scanning method
	DADF: Carriage-fixed, document-feeding scanning method (2- side scanning)
Optical Resolution	600 x 600 dpi (max)
Light Source	LED
Maximum Scanning Guarantee Area	Platen: A4/Letter
	DADH: 215.9mm x 355.6mm (8.5" x 14") 215.9mm x 297mm (8.5 x 11.69 inches)
Scanning Halftone Level	Output from the CCD has the following halftone level.
	Gray: 16bit x 2ch (CDD/EVEN)
	Color: 16bit x 3ch (R/G/B)

Platen

Platen specifications are shown in Table 2:

Table 2 Platen Specifications

Item	Description
Platen Glass	Size: 220 mm x 360 mm (8.66" x 14.17") (Flat glass area)
Document Image Area (Platen mode)	Max: 215.9 mm x 355.6 mm (8.5" x 14")

DADF

DADF specifications are shown in Table 3:

Table 3 DADF Specifications

Item	Description
Document Condition	Sheets without tears, wrinkles, or folds
Document Thickness	Simplex: 50g/m^2 - 125g/m^2 Duplex: 60g/m^2 - 125g/m^2
Auto Document Size Detection	None
Retention Angle / Open Angle of Platen Cover with DADF	Maximum open angle: ≤ 70 deg Platen cover can be retained at any angle: 15 ± 5 through 65 ± 5 deg Platen cover self-weight drop angle: 15 ± 5 deg or less
Document Setting	Center Registration

Table 3 DADF Specifications

Item	Description
Document Tray Capacity	50 sheets of standard documents (document stack height is ≤ 8 mm) Document shall not be creased/folded/swollen, etc.

GP 32 Fax Specifications

Fax Send/Receive Buffer

FlashROM: 4MB

Connectable Network

The Fax can be connected to the following communication networks:

- PSTN
- PBX
- Leased line (3.4 kHz/2-wire)

The Fax be connected to the following communication networks:

- ISDN communication network
- VoIP network

Mutual Communication Ability

Fax mutual communication ability specifications are show in Table 1:

Table 1 Fax Mutual Communication Ability

Characteristic	Specification
Communication Mode	Priority 1: ITU-T Super G3 Priority 2: ITU-T G3 ECM Priority 3: ITU-T G3 Notes: ITU: International Telecommunication Union ITU-T: ITU Telecommunication Standardization Sector ECM: Error Correction Mode
Modem Signal Processing	The following communication standards are supported: • V.34 (33.6 /31.2 /28.8 /26.4 /24 /21.6 /19.2 /16.8 /14.4 /12 /9.6 /7.2 /4.8 /2.4 kbps) • V.17 (14.4 /12 /9.6 /7.2 kbps) • V.29 (9.6 /7.2 kbps) • V.27ter (4.8 /2.4 kbps)
Pixel Transmission Density (on the supported transmission path)	B/W: • R16 x 15.4 line/mm • R8 x 15.4 line/mm • R8 x 7.7 line/mm • R8 x 3.85 line/mm • 400 x 400 pixel/25.4 mm • 300 x 300 pixel/25.4 mm • 200 x 200 pixel/25.4 mm • 200 x 100 pixel/25.4 mm
	Color: Not supported
Communication Image Size	Fast scan direction size on communication: 215 mm ± 1%
Halftone/Compression Method	B/W: 1bit, JBIG, MMR, MR, MH encoding
	Color: Not supported

Table 1 Fax Mutual Communication Ability

Characteristic	Specification
Communication Control Procedure	Comply with ITU-T recommendation T.30
Nonstandard Function	Not supported

Transmission Time

Transmission time (Tp) of image data in G3 mode is as follows (Table 2).

Resolution conversion is not performed during transmission, and density is normal.

Specified value condition: ECM (No data error)

Table 2 Fax Transmission Time

Chart		14.4 Kbps (MMR)	28.8 Kbps (MMR)	33.6 Kbps (JBIG)[a]
IIEEJ No.4	Super Fine	56 sec. or less	29 sec. or less	22 sec. or less
	Fine	26 sec. or less	13 sec. or less	1 sec. or less
	Standard	19 sec. or less	10 sec. or less	7 sec. or less
ITU-T No.1	Super Fine	30 sec. or less	15 sec. or less	12 sec. or less
	Fine	15 sec. or less	8 sec. or less	6 sec. or less
	Standard	11 sec. or less	6 sec. or less	4 sec. or less
FX English Sales Text	Standard	7 sec. or less	4 sec. or less	2 sec. or less
FX Japanese Sales Text	Standard	9 sec. or less	5 sec. or less	4 sec. or less
IIEEJ No.1	Standard	75 sec. or less	38 sec. or less	20 sec. or less
a. Reference value				

Protocol Control Time

When no data error occurs, protocol control time (Tm, Tn, Tu) is as shown in Table 3:

Table 3 Fax Protocol Control Time

Mode	Before: messages: Tm	Between messages: Tn	After messages: Tu	Total
V.17, V.29, V.27ter Standard Protocol	16.4 sec. or less	3.2 sec. or less	4.4 sec. or less	24.0 sec. or less
-V.34 Standard Protocol	9.9 sec. or less	1.0 sec. or less	0.9 sec. or less	11.8 sec. or less

In G3 mode, when a data error that exceeds the threshold occurs, Tn increases by about 6 seconds.

In ECM (Error Correction Mode), according to the number of resending operations performed for the occurred data error, Tn increases by about Tn+1 seconds for each resending operation.

Throughput

The sending time is calculated in the following formula:

Sending time = Call setup time + Tm + (N x Tp) + {(N-1) x Tn} + Tu (sec)

(N: Send quantity; Tp: Image transmission time)

Cable Characteristics

With pseudo cable from 0 to 15 km, the highest speed shall be guaranteed for communication with V.17, V.29, and V.27ter. For V.34, 33600 bps communication speed shall be guaranteed from 0 to 2 km, 31200 bps or higher communication speed from 2 to 9 km, and 19200 bps or higher communication speed from 9 to 15 km.

Communication Load Characteristics

Data error characteristics for noise and cable loss during communication are as follows:

Error rate (Error frequency/Total communication quantity) ≤ 1/500

Incoming Call Level

Under ideal conditions (flat line, no noise, and no other line stress), normal communication shall be guaranteed in the range from -3 through -43 dBm.

For V.17, V.29, and V.27ter, the highest speed shall be guaranteed in the range from -6 through -43 dBm. For V.34, 33600 bps communication speed shall be guaranteed in the range from -9 through -19 dBm, and 16800 bps or higher communication speed in the range from -19 through -43 dBm.

For V.34, normal communication shall be guaranteed in the range from -9 through -43 dBm.

GP 33 Interior and Exterior Cleaning

Purpose

Whenever cleaning any portion of the printer, follow the precautions.

General Precautions

CAUTION

– *Do not remove the covers or guards that are fastened with screws. You cannot maintain or service any parts that are behind these covers and guards. Do not attempt any maintenance procedure that is not described in the documentation supplied with your printer*

– *When cleaning your printer do not use organic or strong chemical solvents or aerosol cleaners. Do not pour fluids directly into any area. Use supplies and cleaning materials only as directed in this documentation.*

- Do not place anything on top of the printer.
- Do not leave the covers and doors open for any length of time, especially in well-lit places. Light exposure can damage the imaging units.
- Do not open covers and doors during printing.
- Do not tilt the printer while it is in use.
- Do not touch the electrical contacts or gears. Doing so could damage the printer and cause the print quality to deteriorate.
- Ensure any parts removed during cleaning are replaced before you plug in the printer.

Recommended Tools

- Toner vacuum cleaner
- Clean water
- Clean, dry, lint-free cloth

Cleaning Process

WARNING

Ensure that the electricity to the machine is switched off while performing tasks that do not need electricity. Disconnect the power cord. Electricity can cause death or injury. Moving parts can cause injury.

Clean the exterior of the printer once a month.

- Wipe the paper tray, output tray, control panel, and other parts with a damp, soft cloth.
- After cleaning, wipe with a dry, soft cloth.
- For stubborn stains, apply a small amount of mild detergent to the cloth and gently wipe the stain off.

CAUTION

Do not spray detergent directly on the printer. Liquid detergent could enter the printer through a gap and cause problems. Never use cleaning agents other than water or mild detergent.

WARNING

Do not handle the fuser components until they have cooled. Some fuser components operate at hot temperatures and can produce serious personal injury if touched.

Clean the interior of the printer regularly to prevent stains inside the printer that can deteriorate printing quality. Clean the printer interior whenever you replace an imaging unit.

After clearing paper jams or replacing a toner cartridge, inspect the inside of the printer before closing the printer covers.

- Remove any remaining pieces of paper or debris. For details, see Clearing Paper Jams.
- Remove any dust or stains with a dry, clean cloth.

GP 34 Cleaning the Scanner and DADF

Purpose

Clean the scanner and DADF as a standard part of service when anything is spilled on them, or when debris or dust collect on any of the surfaces. Keep the feed rollers clean to ensure the best possible copies and scans.

Cleaning the Scanner

WARNING

Ensure that the electricity to the machine is switched off while performing tasks that do not need electricity. Disconnect the power cord. Electricity can cause death or injury. Moving parts can cause injury.

1. Remove any paper from the Document Feeder Tray, and the Document Output Tray.
2. Open the Document Cover.
3. Slightly dampen a soft, lint-free cloth with water.

NOTE: *For best results in the following step, use Xerox® Glass Cleaner to remove marks and streaks.*

4. Clean the document glass (A) and the CVT glass (B) to its left (Figure 1).

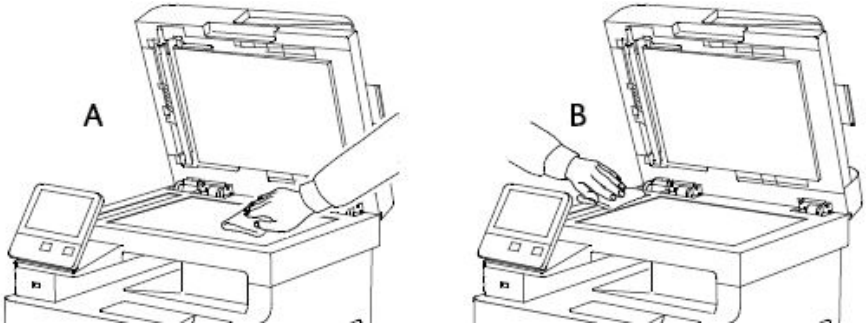

Figure 1 Clean Document Glass and CVT Glass

5. Wipe the white underside of the document cover until it is clean and dry.
6. To access the second-side scanning lens assembly, lower the Second-Side Scanning Access Cover (Figure 2).

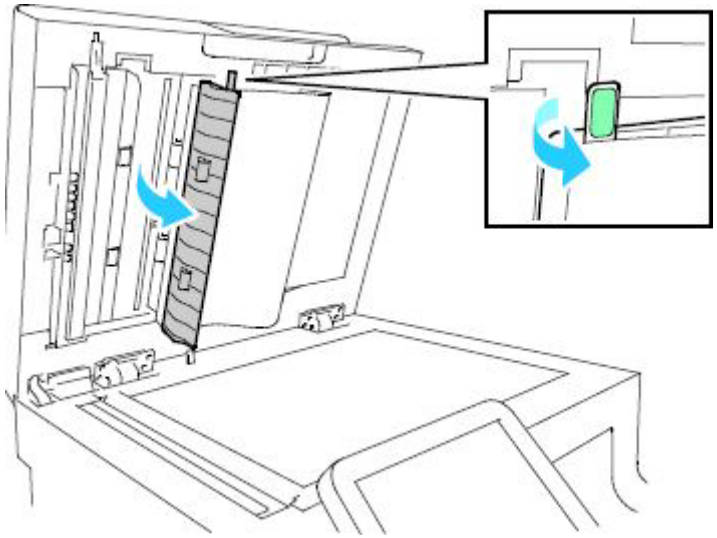

Figure 2 Opening the Second-Side Scanning Access Cover

CAUTION

In the following step, to prevent damage to the film around the glass, do not press heavily on the mirrored glass.

7. Using a soft cloth moistened with water, wipe the mirrored glass (Figure 3), the white-plastic strip, and the rollers. If dirt is difficult to remove, moisten a soft cloth with a small amount of neutral detergent. Then wipe the printer parts dry with a soft cloth.

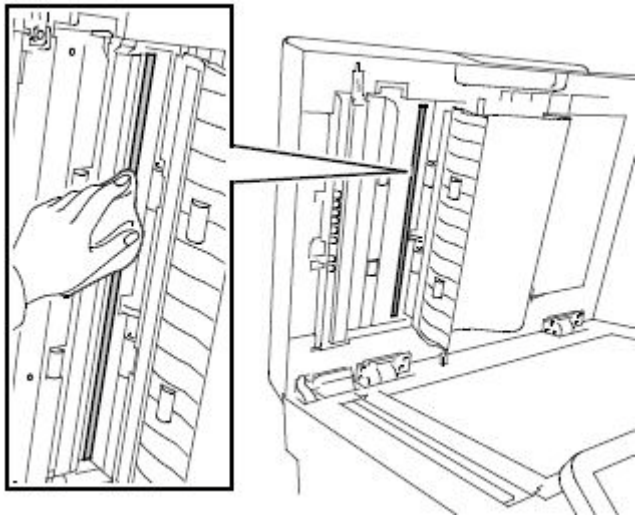

Figure 3 Clean the Second-Side Scanning Lens Assembly

8. Close the Second-Side Scanning Access Cover.
9. Close the Document Cover.

Cleaning the Feed Rollers on the DADF

1. Open the DADF Top Cover.

NOTE: *If the feed rollers get stained with toner or debris, they can cause stains on the documents. To remove the stains, use a soft lint-free cloth dampened with a neutral detergent or water.*

2. Wipe the feed rollers with a dry, soft, lint-free cloth or paper towel until the rollers are clean (Figure 4).

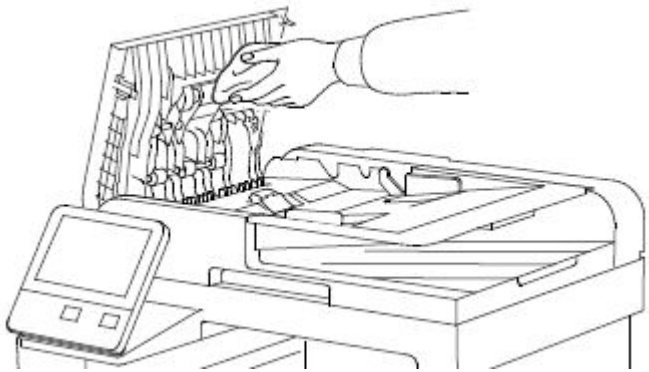

Figure 4 Clean the DADF Feed Rollers

3. Close the Top Cover.

GP35 Setting Up an Ethernet Connection

Establishing an Ethernet connection

Use these steps to establish a Ethernet Local Area Network (LAN) connection between the PWS and printer using a crossover cable.

NOTE: *Record the original data for every change you make. You may or may not need to reset the IP address, depending on PWS usage and local network practice.*

1. Print a Configuration Report, GP 18. Note the printer's IP address to restore after the procedure is complete.
2. Connect the crossover cable between the PWS and printer.
3. Open a Command window (CMD) on the PWS.
   - If running W7, select and in the Search box above the Start button, type
   - If running W10, in the Task bar Search Box, type and press Enter.

   NOTE: *If the Windows key is enabled (the key located in the lower left corner with the Microsoft logo), hold the Windows key down, press R and release both keys to open the Run dialog box.*

4. Type at the prompt, then write down the current network settings displayed.

   NOTE: *Use the IPv4 address for the Local Area Connection, not the address listed under Wireless Ethernet Connection (if enabled in your laptop).*

5. Perform GP36, for the type of printer you are working on (SFP or MFP) to manually setup the IP address.
6. After verifying the IP addresses are correctly configured, PING the printer.
   a. In the Command window (where the blinking cursor is) type the word PING. Press the space bar once and enter the printer's IP address and press Enter. As an example: ping 192.168.0.2.
   b. If the printer responds to the PING command, it replies four times. This should not take more than two or three seconds.
   c. If the PING command times out, or responds with "host unreachable", check the IP addresses that were entered. If the IP address is correct, see Troubleshooting the Connection.
7. If the PING command replies, exit the Command window (type "exit" at the prompt and press). This test verifies the Ethernet connection is good.
8. Install the printer driver and setup the printer as a local printer. Select connect to the printer using "other" port type. From the dialog drop down select Standard TCP/IP port.
9. For the Printer Name or IP address, enter the printers IP address (192.168.0.2 in this example).
10. When the driver installation finishes, Select Yes at the Print Test Print dialog box.

    NOTE: *If the test page does not print, the customer could have Accounting enabled (if the device supports it) requiring that a special code is submitted with the print job before the printer prints. Test the printer using CentreWare Internet Services*

11. After the test print is completed, open a web browser on the PWS.

12. In the Address Bar (in place of a web site address or URL), enter the printer's IP address (192.168.0.2 in this example).
13. If the connection is working correctly, the Embedded Web Server web page of the printer will be displayed.

    NOTE: *If you are unable to open the printer's web page, verify that Embedded Web Server is enabled on the configuration page. If your web browser is set to use a Proxy address for the internet connection, you will not be able to bring up the printer's web page as you will have no connection to that proxy server while directly connected to the printer via crossover Ethernet cable. Refer to PWS Browser Proxy Server Setting for instructions on Internet Explorer proxy configuration*

GP36 How to Manually Configure an IP Address

Purpose

Manual Configuration of the IP address of the printer.

SFP Manual IP Setup

To access the Ethernet menu:

1. At the printer control panel, press Menu.

   NOTE: *To navigate through the menu, use the arrow buttons. To select a menu item, press OK.*

2. Navigate to Admin Menu, then press OK.
3. Navigate to Network Port, then press OK.
4. Navigate to TCP/IP Settings, then press OK.
5. Navigate to Ethernet, then press OK.

To assign a static IP address to the printer:

1. From the Ethernet menu, navigate to Get IP Address, then press OK.
2. Navigate to STATIC, then press OK.
3. In the IP Address field, set the address. When you are finished, press OK.
4. To return to the Ethernet menu, press the Left arrow button.
5. Navigate to Subnet Mask, then press OK.
6. Set the network mask. When you are finished, press OK.
7. To return to Ethernet, press the Left arrow button.
8. Navigate to Gateway Address, then press OK.
9. Set the address. When you are finished, press OK.
10. For the new settings to take effect, press the Menu button to restart the printer.

MFP Manual IP Setup

To assign a static IP address to the printer:

1. At the printer control panel, press the Home button.
2. Touch Device > Connectivity > Ethernet > IPv4.
3. Touch STATIC.
4. At the restart system prompt, touch Continue.
5. Touch the IPv4 Address field.
6. Using the keypad, enter the address as X.X.X.X, where X is a number from 0–255, then touch Enter.
7. Touch the Subnet Mask field.
8. Using the keypad, enter the address as X.X.X.X, where X is a number from 0–255, then touch Enter.
9. Touch the Gateway Address field.
10. Using the keypad, enter the address as X.X.X.X, where X is a number from 0–255, then touch Enter.
11. Touch Restart.

Xerox Supplies and Accessories

Consumables and Maintenance Items

Table 1

NA/XE, Cyan Std Cap	1K	106R03473
NA/XE, Magenta Std Cap	1K	106R03474
NA/XE, Yellow Std Cap	1K	106R03475
NA/XE, Black Std Cap	2.5K	106R03476
NA/XE, Cyan Hi Cap	2.4K	106R03477
NA/XE, Cyan Hi Cap	2.4K	106R03478
NA/XE, Yellow Hi Cap	2.4K	106R03479
NA/XE, Black Hi Cap	5.5K	106R03480
NA/XE, Cyan EX Hi Cap	4.3K	106R03690
NA/XE, Magenta EX Hi Cap	4.3K	106R03691
NA/XE, Yellow EX Hi Cap	4.3K	106R03692
DMO, Cyan Std Cap	1K	106R03481
DMO, Magenta Std Cap	1K	106R03482
DMO, Yellow Std Cap	1K	106R03483
DMO, Black Std Cap	2.5K	106R03484
DMO, Cyan Hi Cap	2.4K	106R03485
DMO, Magenta Hi Cap	2.4K	106R03486
DMO, Yellow Hi Cap	2.4K	106R03487
DMO, Black Hi Cap	5.5K	106R03488
DMO, Cyan EX Hi Cap	4.3K	106R03693
DMO, Magenta EX Hi Cap	4.3K	106R03694
DMO, Yellow EX Hi Cap	4.3K	106R03695
Cyan Metered	2.4K	106R03489
Magenta Metered	2.4K	106R03490
Yellow Metered	2.4K	106R03491
Black Metered	5.5K	106R03492
Waste Cartridge	30K	108R01416
Cyan Drum Cartridge	48K	108R01417
Magenta Drum Cartridge	48K	108R01418
Yellow Drum Cartridge	48K	108R01419
Black Drum Cartridge	48K	108R01420

(Toner yield based on ISO/IEC 19752 Test Standard. Toner consumption will vary depending on image, area coverage and media that is used. Drum cartridge yield based on avg 3 page job length)

dC118 Jam Counter

Description

Displays the Count for jams that have occurred up to now.

Procedure

1. Enter the Diagnostics, GP 1 .
2. Touch **DC118 Jam Counter**.

   The following Items are displayed on the **Jam Counter** screen.
   - Chain-Link
   - Count

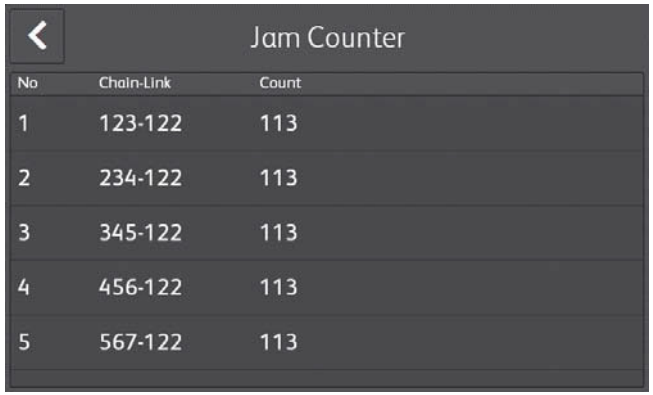

   NOTE: *Jams that have occurred since the previous exit from the Diagnostics with* ***Exit (Clear Log)*** *until now will be displayed.*

   The Count is reset when exiting from the Diagnostics by using ***Exit (Clear Log)****.*

3. Touch **X** to return to the **Diagnostics** screen.
4. Exit the Diagnostics, GP 1.

dC120 Failure Counter

Description

Displays the Count for failures that have occurred up to now.

Procedure

1. Enter the Diagnostics, GP 1.
2. Touch **DC120 Failure Counter**.

   The following Items are displayed on the **Failure Counter** screen.
   - Chain-Link
   - Count

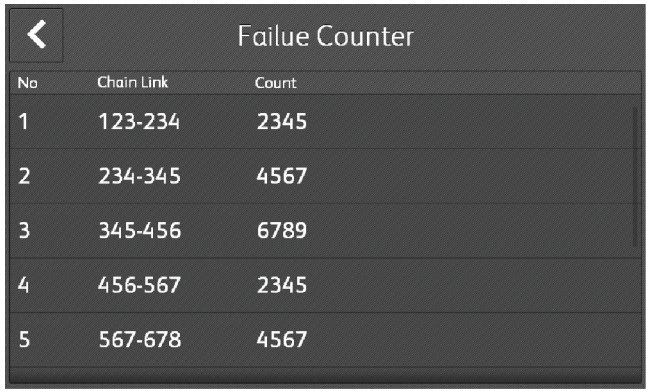

   NOTE: *Failures that have occurred since the previous exit from the Diagnostics with* ***Exit (Clear Log)*** *until now will be displayed.*

   The Count is reset when exiting from the Diagnostics by using ***Exit (Clear Log)****.*

3. Touch **X** to return to the **Diagnostics** screen.
4. Exit the Diagnostics, GP 1.

dC122 Fault History

Description

Displays the history in four categories:

- Document Feeder Jams
- Paper Jams
- Failures
- Last 40 Faults

MFP Procedure

1. Enter the Diagnostics, GP 1.
2. Touch **DC122 Fault History**.

   The following categories are displayed on the **Fault History** screen. The Chain-Link, Date & Time, and Total Volume (billing print count when fault occurred) of the selected category type are displayed on the screen. Category types are:

   - **Paper Jam**s
   - **Document Feeder Jam**s
   - **Failure**s
   - **Last 40 Faults**

   NOTE: *Various conditions*

   - *Failures that have occurred since the previous exit from the Diagnostics with **Exit (Clear Log)** until now will be displayed.*
   - *The Count is reset when exiting from the Diagnostics by using **Exit (Clear Log)**.*
   - *The Total Volume is the value of the Billing counter of the Fault occurrence time.*
   - *When Fault occurs in a printer which doesn't have output it is displayed with 0.*

3. Select any of the Fault History category types to display the Chain-Link, Date & Time, and Total Volume.

   See chapter 2 "Status Indicator RAPs" for a description and remedy of the chain-link fault code.
4. Touch **X** to return to the **Diagnostics** screen.
5. Exit the Diagnostics, GP 1.

SFP Procedure

1. Enter the Diagnostics, GP 1.
2. Navigate to dC122 (SD Histery) (press the Right Arrow).
3. Navigate to the history categories (press the Right Arrow).
4. Select a history category: **Paper Jam** or **Other Faults** (press the Up Arrow or Down Arrow, then press the Right Arrow).
   - If there are no errors in the selected category, **Relevant log not available** appears in the display.
   - When errors are available, a history screen appears. Scroll through the list of errors using the Up Arrow or Down Arrow in the history screen. The error details appear as shown in the Figure 1:

     See chapter 2 "Status Indicator RAPs" for a description and remedy of the chain-link fault code.

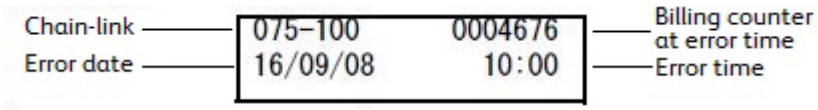

Figure 1 DC122 SFP Fault History Details Screen

5. Navigate back to the **Diagnostics** screen using the Left Arrow.
6. Exit the Diagnostics, GP 1.

dC125 Active Faults

Description

Displays the Active Faults.

Procedure

1. Enter the Diagnostics, GP 1.
2. Touch **DC125 Active Faults**.
   The Chain-Links are displayed on the **Active Faults** screen.
3. Touch **X** to return to the **Diagnostics** screen.
4. Exit the Diagnostics, GP 1.

dC126 System Registration Adjustment

Description

To print the built-in adjustment test pattern, perform measurements at the specified positions, and then perform any of the following adjustments to obtain the correct positions.

- Slow Scan % (Measuring position: Lss-Side1/2)
- Side1/Side2 Registration (Measuring position: A, B, C, D-Side1/2)
- Lead Registration (Measuring position: B-Side1/2)
- Side Registration (Measuring position: A-Side1/2)

MFP Procedure

Printing the Test Pattern

1. Enter the Diagnostics, GP 1.
2. Touch **DC126 System Registration Adjustment**.
   The **System Registration Adjustment** screen is displayed.
3. Select **Paper Supply**, then choose the adjusting tray.
4. Select **Printout Settngs**, then touch **Print**. to print the test pattern (Figure 1).

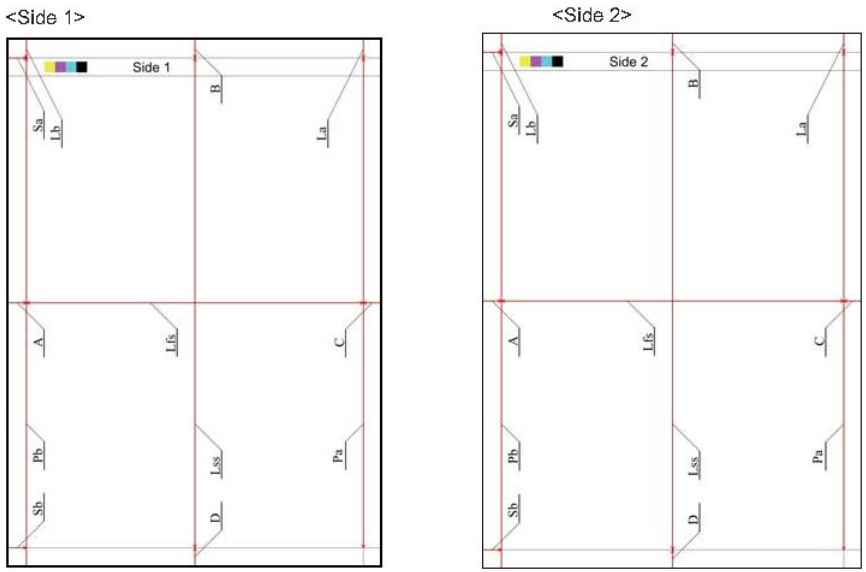

Figure 1 DC126 System Registration Adjustment Test Pattern

Adjust the Registration

This procedure uses **Side Regi** as an example. When doing other adjustments, use the relevant location on the test pattern.

NOTE: *The A, B, C and D locations marked on the test pattern indicate the distance from the test pattern image to the paper's edge.*

1. Using the test pattern chart which was output from the tray requiring adjustment, measure the length (in milimeters) of "A" on the printed test pattern Side 1.

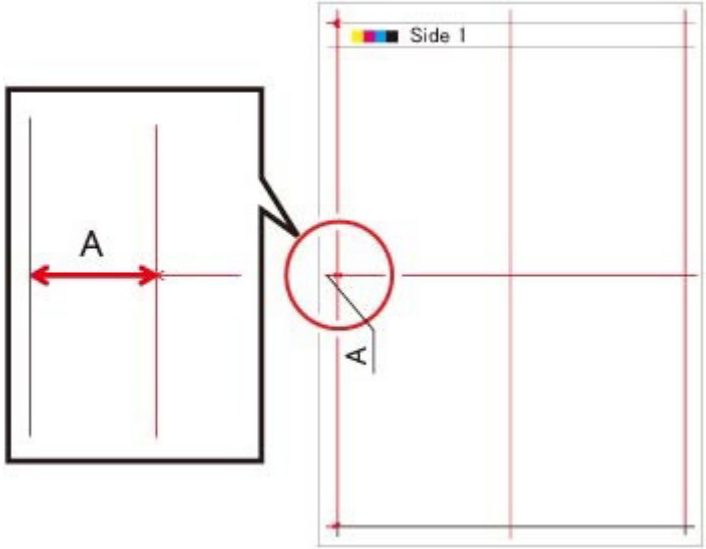

2. Measure the length (in milimeters) of "A" on the printed test pattern Side 2.

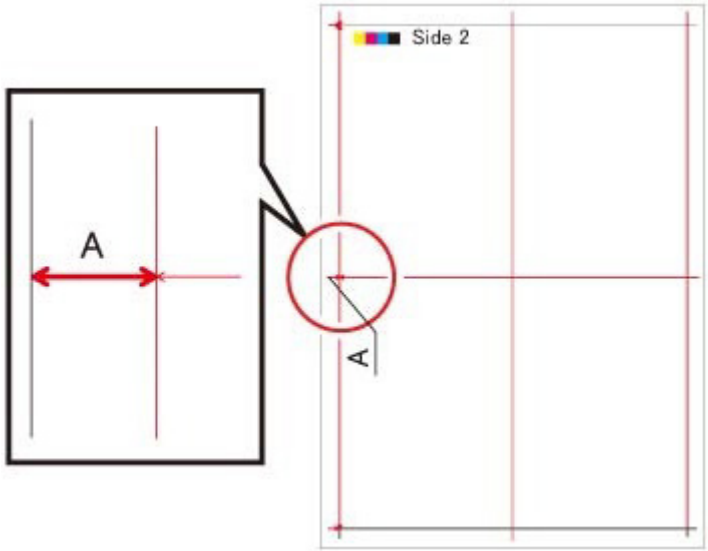

3. Touch **Side Registration**.

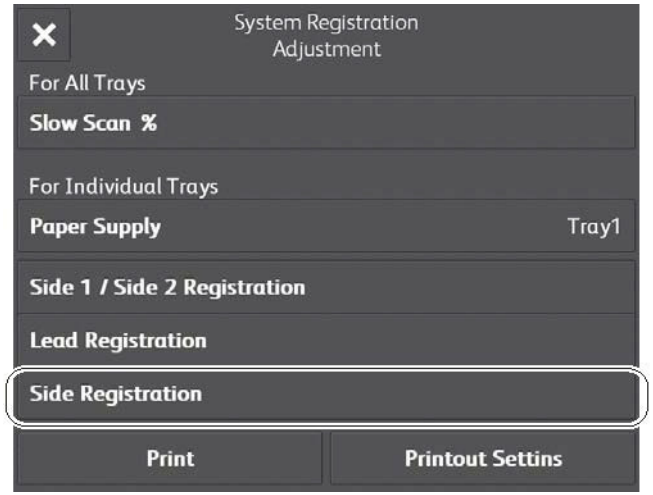

4. Select **Adjusted Side** (ex. Side 1).

5. Touch +/- to enter the value of A for Side 1 which was measured earlier, or touch A to open a keypad on which to enter a value.
6. Select **Adjusted Side** (ex. Side 2).
7. Touch +/- to enter the value of A for Side 2 which was measured earlier, or touch A to open a keypad on which to enter a value.
8. After setting values for Side 1 and Side 2, touch **Adjust**.
9. Exit the Diagnostics, GP 1.

SFP Procedure

Printing the Test Pattern

1. Enter the Diagnostics, GP 1 .

2. Navigate to Adjustment (press the Down Arrow).
3. Navigate to the list of Adjustment diagnostic functions (press the Right Arrow).
4. Scroll down to select **DC126 Regi. Adj** (press the Down Arrow).
5. Navigate to **Slow Scan %** (press the Right Arrow).
6. Navigate to **Tray Settings** (press the Down Arrow).
7. Navigate to **Tray Selection** (press the Right Arrow).
8. Navigate to **Tray Selection** list (press the Right Arrow.
9. Scroll to **Tray1**, **Tray2**, or **SMH** (MSI) (press the Down Arrow), then press **OK** to select the tray.
10. Return to **Tray Settings** (press the Left Arrow twice).
11. Navigate to **Color Mode** (press the Down Arrow).
12. Navigate to **Color Mode** selection list (press the Right Arrow).
13. Scroll to **4C** or **B/W** (press the Up or Down Arrows), then press **OK**.
14. Return to **Color Mode** (press the Left Arrow).
15. Navigate to **Print** (press the Down Arrow).
16. Navigate to **Quantity** (press the Right Arrow).
17. Change the value (press the Up and Down Arrows), then press **OK**.
18. Respond to the prompt **Press OK to run**.
19. To adjust the registration, return to **Adjustment** (press Left Arrow three times).

Adjust the Registration

This procedure uses **Side Regi** as an example. When doing other adjustments, use the relevant location on the test pattern.

NOTE: *The A, B, C and D locations marked on the test pattern indicate the distance from the test pattern image to the paper's edge.*

1. Using the test pattern chart which was output from the tray requiring adjustment, measure the length (in milimeters) of "A" on the printed test pattern Side 1.

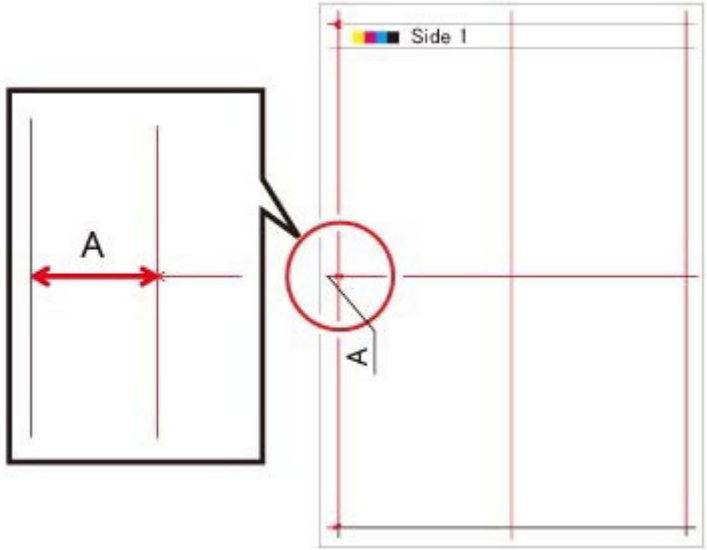

2. Measure the length (in millimeters) of "A" on the printed test pattern Side 2.

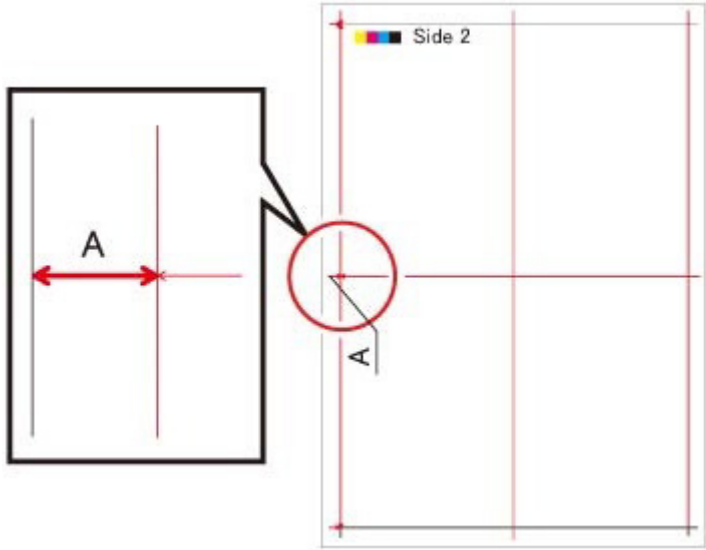

3. Navigate to the list of Adjustment diagnostic functions (press the Right arrow).
4. Scroll down to select **DC126 Regi. Adj** (press the Down Arrow).
5. Navigate to **Slow Scan %** (press Right Arrow), then to **Side Regist**. (press Down Arrow).
6. Navigate to the **Side 1-A** value-entry screen (press Right Arrow twice).

7. Enter the value of Side 1-A measured on the test pattern chart Side 1 (press the Up / Down Arrows to change the value).
8. Navigate to the **Side 2-A** value-entry screen (press the Left Arrow, then the Down Arrow, then the Right Arrow).
9. Enter the value of Side 2-A measured on the test pattern chart Side 2 (press the Up and Down Arrows to change the value).
10. Exit the Diagnostics, GP 1.

dC131 NVM Read / Write

Description

To refer to the NVM data and set/modify it.

MFP Procedure

NOTE: *The fault will be displayed after the machine reboots.*

1. Enter the Diagnostics, GP 1.
2. Touch **DC131 NVM Read / Write**. to display the **NVM Read / Write** screen.
3. Enter the Chain-Link number and touch **Change**.

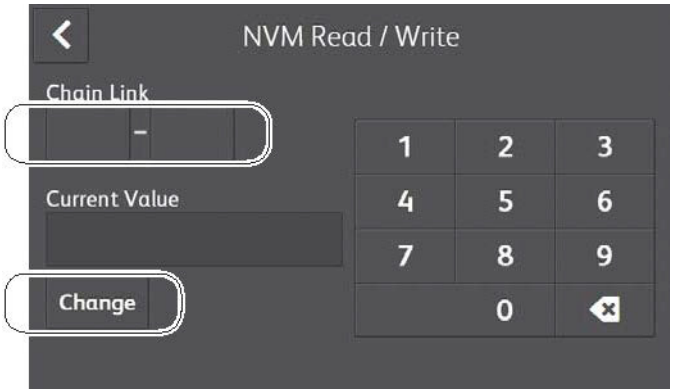

4. The **Current Value** and the **New Value** columns are displayed.

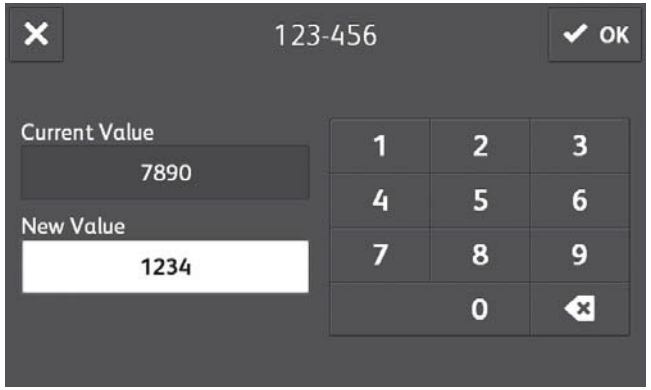

5. Enter the value that you wish to change to into the **New Value** column and touch **OK**.
6. The entered number is displayed in the **Current Value** column.
7. Touch **Close**.
8. Touch **X** to return to the **Diagnostics** screen.
9. Exit the Diagnostics, GP 1.

SFP Procedure

1. Enter the Diagnostics, GP 1.
2. Navigate to **Adjustment** (press the Down Arrow).
3. Navigate to the **DC131 NVM R/W** function's Chain-Link number-entry screen (press the Right Arrow twice).
4. Enter the component's Chain-Link number (press the Up/Down and Right/Left Arrows), then press **OK**.

   The current NVM Value appears on the screen.
5. Change the NVM Value (press the Up/Down and Right/Left Arrows), then press **OK**.

   An asterisk appears after setting the value.
6. Exit the Diagnostics, GP 1.

dC132 Device ID / Billing Data

Description

To repair the mismatch of Serial No., Product No. and Billing Counter Value between the MSU and ESS Boards when one of them has been replaced by setting the values in the replaced board to those values in the unreplaced board.

The Serial No., Product No., and Billing Counter are held at the following three locations respectively:

- MCU Board (IOT)
- EMMC Board (SEEP Data. SYS1)
- EMMC Board (NVM Data. SYS2)

NOTE: *Be aware of the following:*

- *This function can only be used when a failure has occurred.*
- *When the three values (IOT, SYS1, SYS2) are the same, there is no need to continue with this diagnostic function.*
- *When exiting the Diagnostics after matching up the Serial No., the fault will be cleared after the machine reboots.*

MFP Procedure

1. Enter the Diagnostics, GP 1.
2. Touch **DC132 Device ID / Billing Data**. to display the **Device ID and Billing Data** screen.
3. Select the Correct data area (IOT, SYS1 and SYS2) (for example, if the MCU (IOT) Board was replaced, select SYS1 or SYS2 for entering the serial numbering in the next step.)

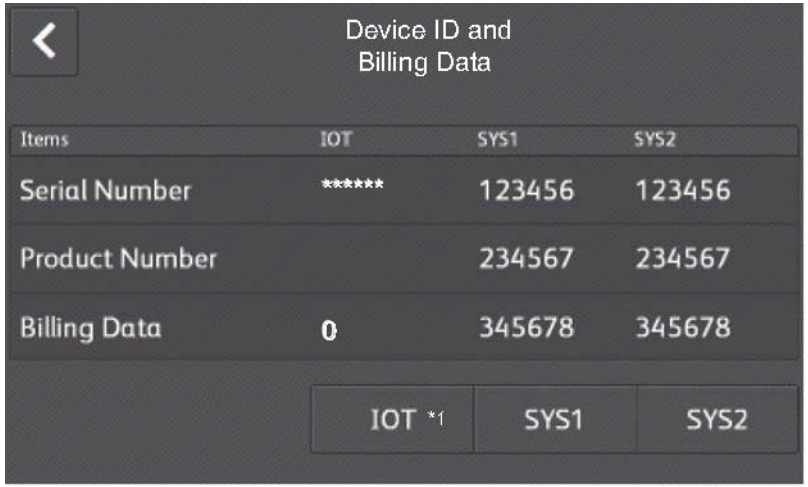

4. Enter the Serial Number.

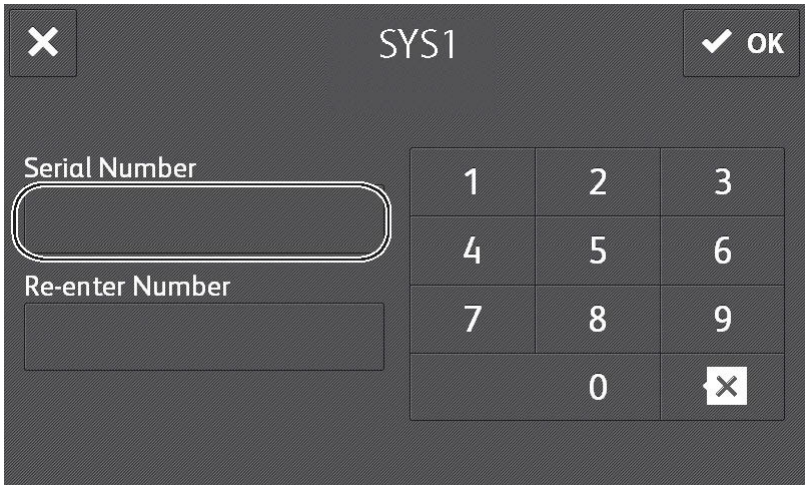

5. Re-enter the Serial Number, then touch **OK**.

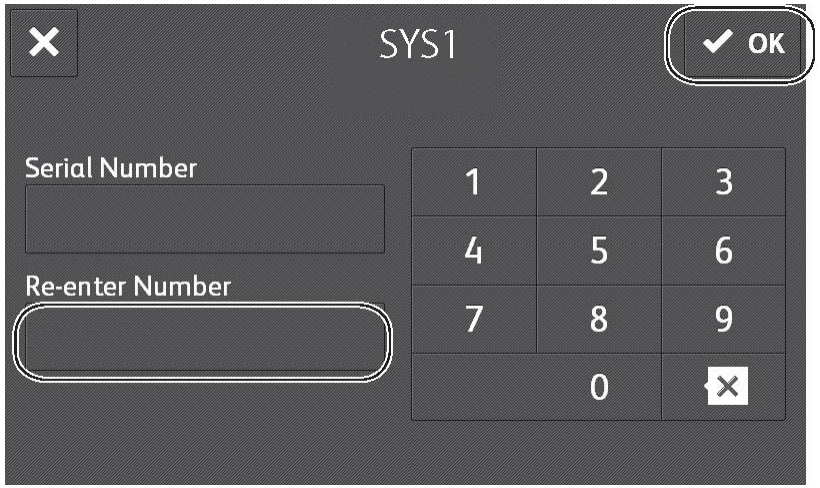

6. Verify that the column data for IOT, SYS1, SYS2 are now all matching.
7. Touch **X** twice to exit out to the **Diagnostics** screen.
8. Exit the Diagnostics, GP 1.
9. The machine will reboot.

SFP Procedure

NOTE: *The DC132 menu item appears in the SFP display only when the related error occurs.*

1. Enter the Diagnostics, GP 1.
2. Navigate to **Adjustment** (press the Down Arrow).
3. Navigate through the list of Adjustment fuctions to **DC132 Set Serial**. (press the Right Arrow, then the Down Arrow).
4. Navigate to the list of adjustable items (press the Right Arrow).
5. Scroll through the list of items to the preferred item (press the Down Arrow).
6. Scroll to **TargetPWBA** (press the Down Arrow).
7. Select **TargetPWBA** (press the Right Arrow).
8. Scroll to the correct data area which is the PWBA (Board) that was not replaced, etc. (press the Down Arrow). The correct data area choices are:
   - IOT (MCU Board)
   - SYS1 (EMMC Board - SEEP Data)
   - SYS2 (EMMC Board - NVM Data)
9. Press **OK** to select the displayed data area. An asterisk appears in the display.
10. Press **OK** to dislay the value-entry screen.
11. Enter the Serial Number (press the Up/Down Arrows and the Left/Right Arrows), then press **OK**.
12. Re-enter the Serial Number, then press **OK**.
    The screen displays **Complete**.
13. Exit the Diagnostics, GP 1.
14. The machine will reboot.

dC135 HFSI Counter (High Frequency Service Item)

(This function is for reference only and is not needed for this product because there are no HFSI items.)

Description

Displays the Spec Life (threshold value) and the Current Value (usage status) of the periodic replacement parts. You can change the Spec Life and reset the Current Value.

The Job History can be used to record/check the previous three replacements.

See Table 1 for a list of HFSI Counter Items.

Table 1 HFSI Counter Items

Chain Link	MFP/SFP	Item
950-814	MFP/SFP	Belt PV
955-806	MFP	DADF Feed Count
955-807	MFP	DADF Simplex Feed Count
955-810	MFP	DADF I/L Open Count
955-812	MFP	DADF TA Clutch On-Count
955-828	MFP	DADF Feed Clutch On-Count
956-802	MFP	IIT Scan Count
956-803	MFP	IIT Light Lamp Time
956-804	MFP	IIT Lamp Turn On Count

Procedure

1. Enter the Diagnostics, GP 1.
2. Touch **DC135 HFSI Counter** to display the **HFSI Counter** screen.
3. Enter the Chain-Link No. or select the parts to be replaced and touch **Details**.

4. The **Details** screen displays the **Chain-Link** and the **Part Name** of the parts to be replaced, as well as the **Spec Life**, **Current Value**, **Last Replacement**, **Second Last Replacement**, and **Third Last Replacement** counters.

5. To reset the Current Value, Touch **Reset**. The **Reset Current Value** screen is displayed.

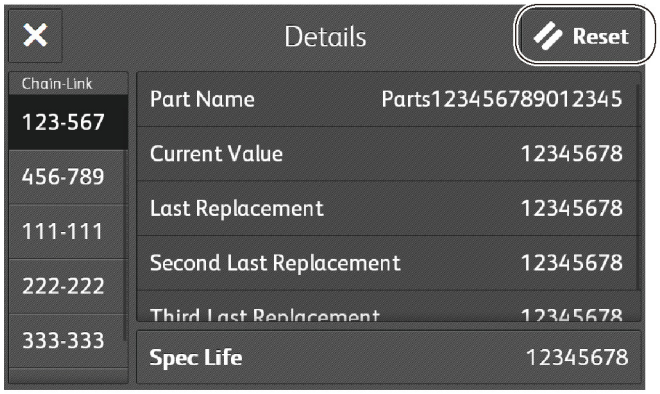

6. Following the message and tapping **Yes** updates the last three replacement records in the HFSI Counter as follows.
   a. The **Second Last Replacement** value is moved to **Third Last Replacement**.
   b. The **Last Replacement** value is moved to **Second Last Replacement**.
   c. The **Current Value** value is moved to **Last Replacement**.
   d. The **Current Value** value is set to **0**.

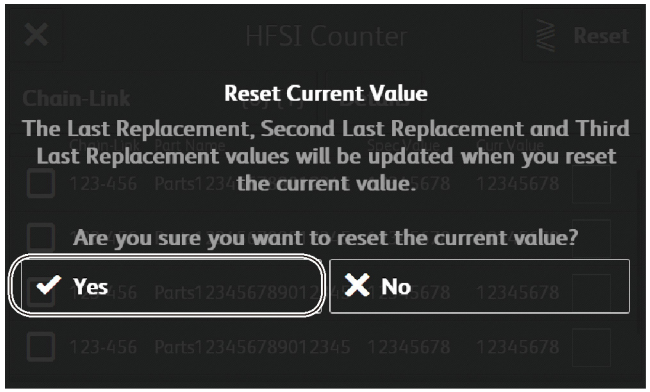

7. To change the Spec Life, touch **Spec Life**.. This displays the **Spec Life** screen.

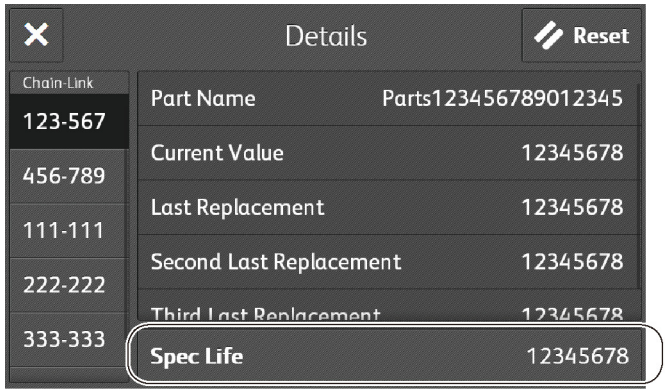

8. Enter the new Spec Life (Max. 8 digits) and touch **OK**.
   The **Spec Life** value is overwritten with the new **Spec Life** value.

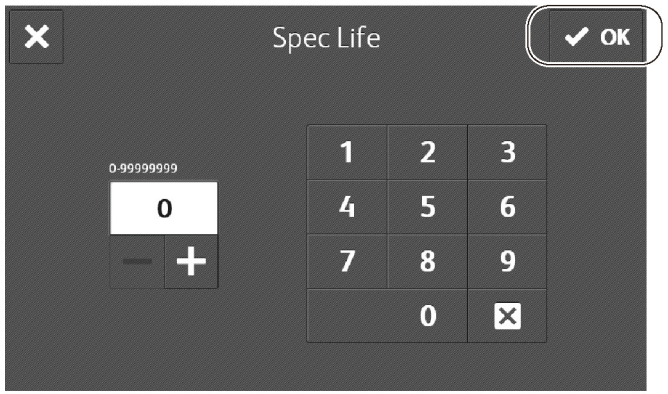

9. Touch **X** to return to the **HFSI Counter** screen.
10. Touch **X** to return to the **Diagnostics** screen.
11. Exit the Diagnostics, GP 1.

dC140 Analog Component Monitoring

Description

Monitors the Analog value of the A/D converter sensor, by operating the various components. See Table 1 for the components and their chain-links.

Table 1 Input List

Chain-Link No.	Component	Command	Operation
010-200	Fuser STS Sensor (Center)	04 :Monitor	01 :Start 02 :Stop
010-203	Fuser STS Sensor (Side)	04 :Monitor	01 :Start 02 :Stop
046-200	Transfer Roller (2nd Bias Transfer Roll) Current Monitor	04 :Monitor	01 :Start 02 :Stop
046-201	BK 1ST Bias Transfer Roll Current Monitor	04 :Monitor	01 :Start 02 :Stop
091-201	Environment Sensor Humidity	04 :Monitor	01 :Start 02 :Stop
091-202	Environment Sensor Temperature	04 :Monitor	01 :Start 02 :Stop
092-200	RAD VDIF	04 :Monitor	01 :Start 02 :Stop
092-201	RAD VSP	04 :Monitor	01 :Start 02 :Stop
092-202	RAD Low VSP	04 :Monitor	01 :Start 02 :Stop

MFP Procedure

1. Enter the Diagnostics, GP 1.
2. Touch **DC140 Analog Monitor**.
   The **Analog Monitor** screen is displayed.
3. Touch **Chain-Link**.

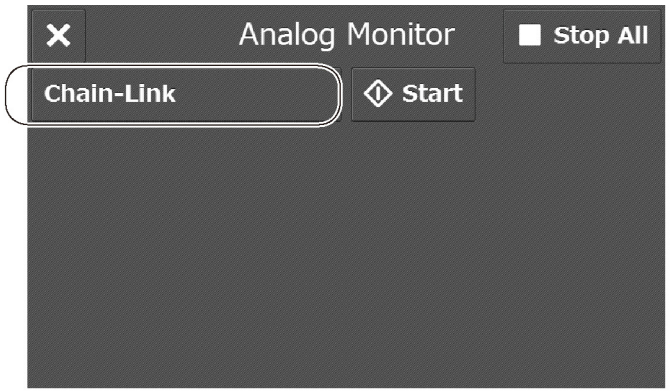

4. Enter the Chain-Link No. and touch **OK**.

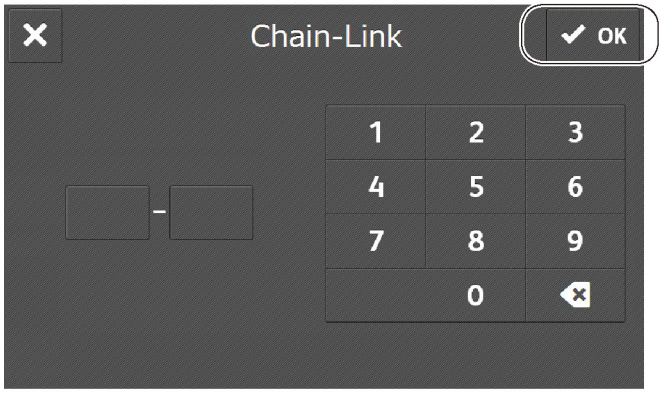

5. Touch **Start**.

6. The resulting screen display the following items:
   - **Input / Output** column: Component type (Input / Output component)
   - **Enabled / Disabled** column: Operation states - Enabled (Checking in progress) Disabled (Checking stopped)
   - **Level** column: Displays the received output level value.

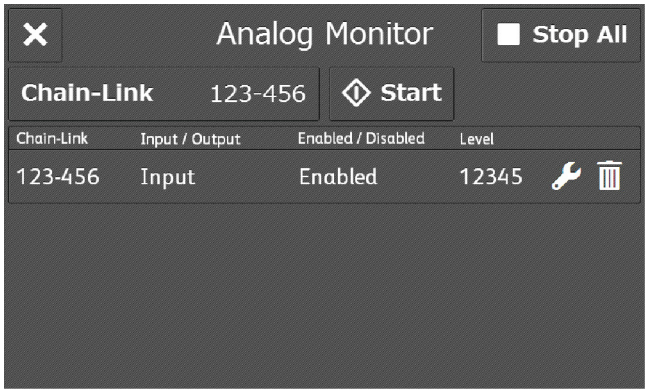

7. Touch **Stop All** to stop the component operation.

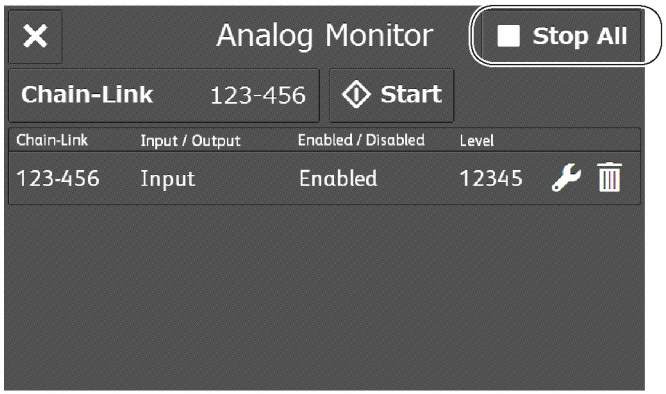

8. Touch **X** to return to the **Diagnostics** screen.
9. Exit the Diagnostics, GP 1.

SFP Procedure

This procedure shows an example executing the following chain-links at the same time:

- 046-200: Bias Transfer Roller Current Monitor
- 010-200: Fuser STS Sensor (Center)

1. Enter the Diagnostics, GP 1.
2. Navigate to **Fault Diag.** (press the Down Arrow).
3. Navigate to **DC140 Monitor** (press the Right Arrow).
4. Navigate to the Monitor menu items (press the Right Arrow). **Component Input** appears in the display.
5. Navigate through the Monitor menu items (press the Up/Down Arrows).

   Monitor menu items include the following:

   - **Component Input**: Displays an input screen for chain-link numbers (see Table 1) . Use the arrow buttons to enter a chain-link number for a component, then press **OK**. An asterisk appears next to the entered number.
   - **Component List**: Displays all components to be monitored.

     To start monitoring, press **OK**.

     To stop monitoring, press **Stop**.
   - **Delete All**: Ends monitoring all components.

6. Continue the example by choosing the **Component Input** screen (press the Up/Down Arrows, then the Right Arrow).
7. Enter the chain-link number 046-200 (Bias Transfer Roller Current) and press **OK**. An asterisk appears in the display showing the value is set.

   Use the Up/Down Arrows to change the value at the cursor's position, and the Left/Right Arrows to change the cursor's position.
8. To start monitoring, press **OK**. The Bias Transfer Roller Current value appears under **Component List**.
9. To stop monitoring, press **Stop**. The Current value is blank.
10. Return to **Component List** (press the Left Arrow).
11. Navigate to **Component Input** (press the Up Arrow).
12. Choose **Component Input** (press the Right Arrow).
13. Change the chain-link number to 010-200 Fuser STS Sensor (Center) and press **OK**. An asterisk appears in the display showing the value is set.
14. To view the chain-link number in the **Component List**, press **OK**. The Fuser STS Sensor value appears under **Component List**.
15. To start monitoring, press the Down Arrow. The sensor value appears in the display.
16. To stop monitoring, press **Stop**. The sensor value is blank.
17. Return to **Component List** (press the Left Arrow).
18. Navigate to **Delete All** (press the Down Arrow).
19. To stop all monitoring, and delete all component chain-link numbers from the Component List, press the Right Arrow, then press **OK**.
20. Exit the Diagnostics, GP 1.

dC301 Initialize NVM

Description

To initialize any NVM area. Also, run dC363 “NVM Backup/Restore” prior to initializing the IOT area.

MFP Procedure

1. Enter the Diagnostics, GP 1.
2. Touch **DC301 Initialize NVM**.
3. The Initialize NVM screen is displayed with the following items (in the "Option" column in Table 1 below):

Table 1

Option	Description	Comments
IOT1	NVMs associated with the engine	
IOT2	Does not apply / function. Do not use.	
Finisher	Does not apply / function. Do not use.	
IFM	Does not apply / function. Do not use.	
ISS-IIT/IPS	NVMs associated with the IIT Scanner and DADF	
IISS-Exetension	Does not apply / function. Do not use.	
Input Device	Does not apply / function. Do not use.	
Sys-Sytem	Resets CSE-definable data.	If you reset Sys-System, you must also reset Sys-User.
Sys-User	Resets user-definable data.	If you reset Sys-User, you must also reset Sys-System.
Fault Counter	Does not apply / function. Do not use.	
HCS 1	Does not apply / function. Do not use.	
HCS 2	Does not apply / function. Do not use.	
PFIM	Does not apply / function. Do not use.	
NOTE:	After NVM initialize and reboot, check the Embedded Web Server. If it's not functional, go into diagnostics --> dc131 and check 790-900. If it is 0, change to 1 and reboot machine. Then verify that Embedded Web Server is working again.	

4. Select the area to be initialized then touch **Start**.
5. Follow the message shown on the **Initialize NVM** screen and touch **Yes** or **No**.

6. Touch **X** to return to the **Diagnostics** screen.
7. Exit the Diagnostics, GP 1.

SFP Procedure

1. Enter the Diagnostics, GP 1.
2. Navigate to **Adjustment** (press the Down Arrow).
3. Navigate to **DC301 NVM Init.** (press the Right arrow, then press the Down arrow).
4. Navigate to the **NVM Init. Area** > **SysUser** (press the Right arrow twice).
5. Scroll through the NVM Init Areas (press the Up/Down Arrows).
   - **SysSystem**: Resets CSE-definable data
   - **SysUser**: Resets user-definable data.
   - **IOT**: NVMs associated with the engine.

   NOTE: After exiting diagnostics, reboot the device.
6. Select the displayed DC301 NVM Init Area for initialization (press **OK**).
7. Initialize the NVM value for the selected Area (press **OK** again). An asterisk appears when the value is initialized (**NOTE: *this may take several minutes***).
8. Exit the NVM Init. function (press the Left Arrow twice).
9. Exit the Diagnostics, GP 1. The printer restarts automatically.

dC305 Panel Diagnostics

Description

To perform diagnosis of the LED / Audio which is implemented in the UI Panel.

MFP Procedure

1. Enter the Diagnostics, GP 1.
2. Touch **DC305 Panel Diagnostics**.
   The **Panel Diagnostics** screen is displayed.
3. Touch **LED Test** or **Audio Test**.

When the LED Test is selected

1. Touch **LED Test**.

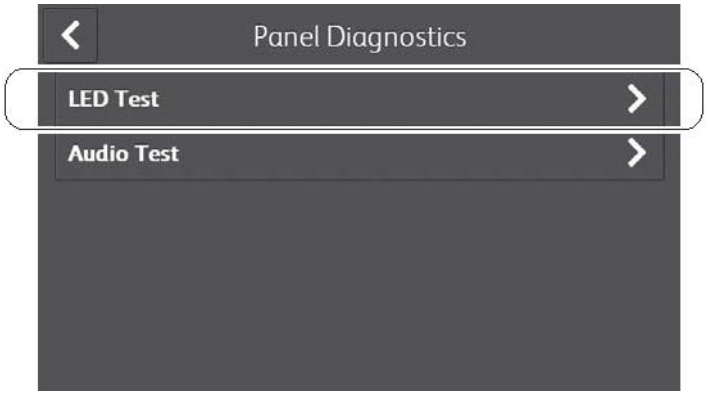

2. Select the LED to be diagnosed.

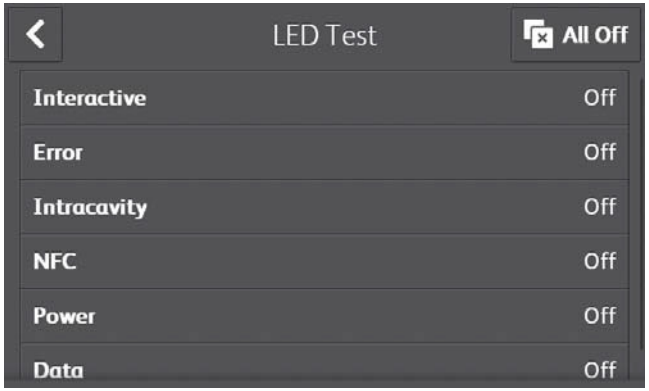

3. Select the display-pattern of the LED and touch **Off** or **Steady On**.
   The LED is turned on with the specified display-pattern.
4. Touch **All Off** and the LED is turned off.
5. Touch **<** to return to the **Panel Diagnostics** screen.

When Audio Test is selected

1. Touch **Audio Test**.

2. Specify the audio volume (three steps).

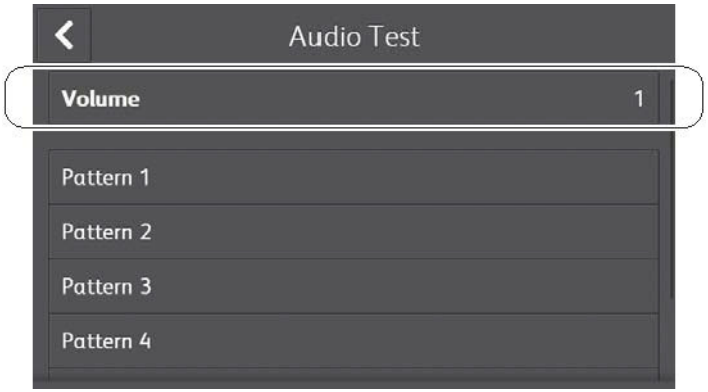

3. Select the Audio pattern to be diagnosed and touch the button.
   The Audio sounds with the specified volume and pattern.

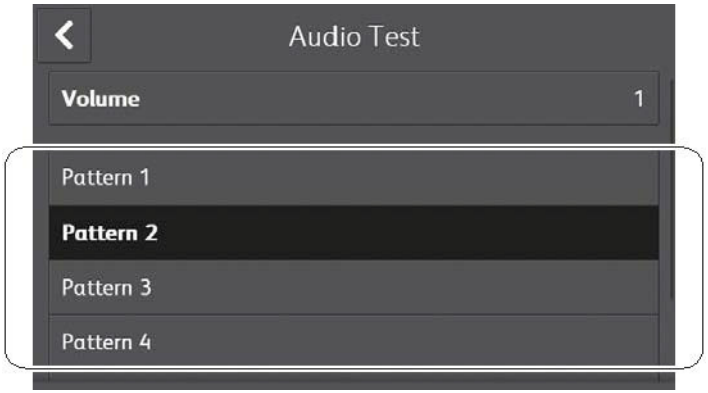

4. Touch **<** to return to the **Panel Diagnostics** screen.
5. Touch **X** to return to the **Diagnostics** screen.
6. The machine will reboot. Select “Reboot now”.

SFP Procedure

For the SFP, see Table 1 for LED Test Patterns, and see Table 2 for Buzzer Sound Patterns.

Table 1 SFP LED Test Patterns

LED Test Areas	Test Pattern
Power LED	On, Flash, Breathing Low, Breathing High
Print LED	On, Flash
Error LED	On, Flash
Interaction LED	On, Flash

Table 2 SFP Buzzer Sound Patterns

Pattern No.	Pattern
Pattern 1	Continuous Beep
Pattern 2	Short Beep
Pattern 3	Short, Long Beep
Pattern 4	2 Short Beeps
Pattern 5	Long Beep
Pattern 6	2 Long Beeps
Pattern 7	5 Long Beeps
Pattern 8	5 Long Beeps, Repeating
Pattern 9	5 Long Beeps, Repeating
Pattern 10	5 Short Beeps, Repeating
Pattern 11	5 Short Beeps, Repeating

1. Enter the Diagnostics, GP 1.
2. Navigate to **Fault Diag** (press the Down Arrow).
3. Navigate to **DC305 Panel Diag** (press the Right Arrow, then the Down Arrow).
4. Navigate to the **LED Check** (press the Right Arrow).
5. Scroll between **LED Check** and **Buzzer Check** (press the Up/Down Arrows), then choose one of them (press the Right Arrow).
   - **LED Check**:
     a. Scroll through the **LED Check** Test Areas: Power, Print, Error, Interaction (press the Down Arrow).
     b. Select an LED Check Test Area (press the Right Arrow). See Table 1.
     c. Scroll through the LED Test Patterns (press the Down Arrow). See Table 1.
     d. After choosing a test area and pattern, select a command:
        – Press **OK** to start testing.
        – Press **Stop** to stop testing.
   - **Buzzer Check**:
     a. Scroll through the **Buzzer Check** Pattern Numbers: Pattern 1- Pattern 11 (press the Up/Down Arrows).
     b. Select a Buzzer pattern (press the Right Arrow). See Table 2.
     c. Scroll through the Sound Volumes (press the Down Arrow). See Table 2.
     d. After choosing a pattern and volume, select a command:
        – Press **OK** to start testing.
        – Press **Stop** to stop testing.
6. Exit the Diagnostics, GP 1.

dC330 Component Control

Description

Displays the logic state of Input Component input signals (Table 1) and operates the Output Components (Table 2) .

Table 1 Input List

Chain-Link	Component	Command	Operation
010-200	Fuser Relay Enable	04 :Monitor	01 :Start 02 :Stop
041-300	Inter Lock Side Cover	04 :Monitor	01 :Start 02 :Stop
041-301	Inter Lock Rear Cover	04 :Monitor	01 :Start 02 :Stop
042-200	Main FAN Alarm	04 :Monitor	01 :Start 02 :Stop
042-201	Sub FAN Alarm	04 :Monitor	01 :Start 02 :Stop
071-100	Bypass (MSI) No Paper Sensor	04 :Monitor	01 :Start 02 :Stop
071-101	Tray1 No Paper Sensor	04 :Monitor	01 :Start 02 :Stop
071-103	Regi Sensor	04 :Monitor	01 :Start 02 :Stop
071-104	Exit Sensor	04 :Monitor	01 :Start 02 :Stop
071-109	Option Feeder1 Size Sensor0	04 :Monitor	01 :Start 02 :Stop
071-110	Option Feeder1 Size Sensor1	04 :Monitor	01 :Start 02 :Stop
071-111	Option Feeder1 Size Sensor2	04 :Monitor	01 :Start 02 :Stop
071-112	Option Feeder1 No Paper Sensor	04 :Monitor	01 :Start 02 :Stop
071-113	Option Feeder1 Path Sensor	04 :Monitor	01 :Start 02 :Stop
071-200	Main Motor Alarm (1)	04 :Monitor	01 :Start 02 :Stop
071-201	Sub Motor Alarm (1)	04 :Monitor	01 :Start 02 :Stop
071-202	Option Feeder1 Motor Alarm (1)	04 :Monitor	01 :Start 02 :Stop
094-200	Drum Cartridge Retract Sensor	04 :Monitor	01 :Start 02 :Stop
094-201	K Belt Retract Sensor	04 :Monitor	01 :Start 02 :Stop

Table 1 Input List

Chain-Link	Component	Command	Operation
094-202	Waste Cartridge Full Sensor	04 :Monitor	01 :Start 02 :Stop

(1) The motor must be turned following its limitations.

Table 2 Output List

Chain-Link	Component	Enable 24V (041-001) O: yes X: no	CAUTION Cyclic motion is not an available option. DO NOT attempt to run.
010-001	Fuser Relay	X	**Note:** Do not turn Main-Motor on under OFF state. Main-Motor should be turned on after waiting more than 15 seconds after Fuser-Relay is turned on.
041-001	Low Voltage Power Supply 24V	X	When OFF state, start using with 24V turned on, since Motor or Fan will not rotate if 24V is off. When 24V is turned on under machine fault condition, great care is required and if something abnormal happens, turn the power off immediately.
042-001	Main Fan(Normal)	X	
042-002	Main Fan(Half)	X	
046-001	HVPS_Clock	X	
046-002	DBAC_Clock	X	
046-003	TR_Clock	X	
061-001	LPH Forcing Lighting (All solid image)	X	CAUTION *Uninstall the Drum unit when LPH is forcibly lighted. When LPH is forcibly lighted while Drum unit is installed and Drum operation is stopped, light-induced fatigue of photoreceptor will occur.* -061-001: Light the LPH forcibly (Cin100%) -061-002: Light the LPH forcibly (Cin50%) -061-003: Only thyristor transfer is performed
061-002	LPH Forcing Lighting (Cin50%)	X	
061-003	LPH Forcing Lighting (Thyristor transfer)	X	
071-001	Bypass (MSI) Feed Solenoid	O	Auto OFF See table note (1)

Table 2 Output List

Chain-Link	Component	Enable 24V (041-001) O: yes X: no	CAUTION Cyclic motion is not an available option. DO NOT attempt to run.
071-002	Tray1 Feed Clutch	O	Auto OFF Enable a Motor Output Command first: - 071-069: Motor (Normal: Main&Sub) - 071-070: Motor (Slow Speed 1: Main&Sub See table note (1)
071-003	Take Away Clutch	O	Enable a Motor Output Command first: - 071-069: Motor (Normal: Main&Sub) - 071-070: Motor (Slow Speed 1: Main&Sub See table note (1)
071-004	Regi Clutch	O	Enable a Motor Output Command first: - 071-069: Motor (Normal: Main&Sub) - 071-070: Motor (Slow Speed 1: Main&Sub See table note (1)
071-005	Exit Clutch	O	Enable a Motor Output Command first: - 071-069: Motor (Normal: Main&Sub) - 071-070: Motor (Slow Speed 1: Main&Sub See table note (1)
071-006	Invert Clutch	O	Enable a Motor Output Command first: - 071-069: Motor (Normal: Main&Sub) - 071-070: Motor (Slow Speed 1: Main&Sub See table note (1)
071-007	Duplex Clutch	O	Enable a Motor Output Command first: - 071-069: Motor (Normal: Main&Sub) - 071-070: Motor (Slow Speed 1: Main&Sub See table note (1)
071-010	Option Feeder1 Motor (Normal)	O	See table note (1)
071-011	Option Feeder1 Motor (Slow Speed 1)	O	See table note (1)
071-014	Option Feeder1 Feed Clutch	O	Auto OFF See table note (1)
071-015	Option Feeder1 Take Away Clutch	O	See table note (1)

Table 2 Output List

Chain-Link	Component	Enable 24V (041-001) O: yes X: no	CAUTION Cyclic motion is not an available option. DO NOT attempt to run.
071-061	Main Motor (Normal)	O	In case only Main Motor is rotated, friction scratch between YMC Drums (driven by Sub Motor) and Transfer Belt occurs. In case only Main Motor needs to be rotated, uninstall YMC Drum units or Transfer Belt unit or operate 1st Bias Transfer Roll YMC Retract first. And in case only Drum unit or only Transfer Belt unit is rotated for long period of time, there is a risk that cleaning blade is damaged or turned up. Maximum length of Drum unit or Transfer Belt unit is rotation time is approximately 60 seconds. See table note (1)
071-062	Main Motor (Slow Speed 1)	O	
071-065	Sub Motor (Normal)	O	In case only Subn Motor is rotated, friction scratch between YMC Drums (driven by Main Motor) and Transfer Belt occurs. In case only Sub Motor needs to be rotated, uninstall YMC Drum units or Transfer Belt unit or operate 1st Bias Transfer Roll YMC Retract first. And in case only Drum unit or only Transfer Belt unit is rotated for long period of time, there is a risk that cleaning blade is damaged or turned up. Maximum length of Drum unit or Transfer Belt unit is rotation time is approximately 60 seconds. See table note (1)
071-066	Sub Motor (Slow Speed 1)	O	
071-069	Motor (Normal:Main&Sub)	O	In case only Drum unit or only Transfer Belt unit is rotated for long period of time, there is a risk that cleaning blade is damaged or turned up. Maximum length of Drum unit or Transfer Belt unit is rotation time is approximately 60 seconds. See table note (1)
071-070	Motor (Slow Speed 1:Main&Sub)	O	See table note (1)

Table 2 Output List

Chain-Link	Component	Enable 24V (041-001) O: yes X: no	CAUTION Cyclic motion is not an available option. DO NOT attempt to run.
093-004	Yellow Toner Dispence Motor (Normal)	O	In case Dispense Motor is operated independently, there is a risk that toner gets blocked in the dispenser route. Dispense Motor needs to be operated when Main&Sub Motors are operated. And if the Dispense Motor is operated for long period of time, contamination inside of the machine or fog on paper will occur by toner cloud. So check the status frequently. See table note (1)
093-005	Yellow Toner Dispence Motor (Half)	O	
093-006	Magenta Toner Dispence Motor (Normal)	O	
093-007	Magenta Toner Dispence Motor (Half)	O	
093-008	Cyan Toner Dispence Motor (Normal)	O	
093-009	Cyan Toner Dispence Motor (Half)	O	
093-010	Black Toner Dispence Motor (Normal)	O	
093-011	Black Toner Dispence Motor (Half)	O	
094-001	Drum Cartridge Retract Solenoid	O	Auto OFF Enable a Motor Output Command first: - 071-069: Motor (Normal: Main&Sub) - 071-070: Motor (Slow Speed 1: Main&Sub See table note (1)
094-002	K Belt Retract Clutch	O	Auto OFF Enable a Motor Output Command first: - 071-069: Motor (Normal: Main&Sub) - 071-070: Motor (Slow Speed 1: Main&Sub See table note (1)
094-003	Belt Color Mode (1st Bias Transfer Roll YMC Contact)	O	Sequence operation. Auto OFF. See table note (1)

Table 2 Output List

Chain-Link	Component	Enable 24V (041-001) O: yes X: no	CAUTION Cyclic motion is not an available option. DO NOT attempt to run.
094-004	Belt Mono-chrome Mode (1st Bias Transfer Roll YMC Retract)	O	Sequence operation.Auto OFF. See table note (1)

MFP Procedure

1. Enter the Diagnostics, GP 1.
2. Touch **DC330 Component Control** to display the Component Control screen.

CAUTION

*Do not use the **Cyclic Motion** feature in this function. It is not functional and could cause errors.*

***NOTE:** Two or more components can be run at the same time. This is useful when it's necessary to enable 24V before running other components. To run two or more components using the following steps, start the first component, then start the next component.*

3. Touch **Chain-Link**.

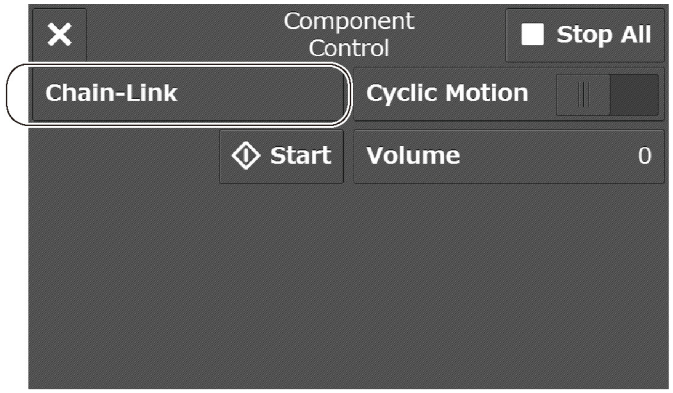

CAUTION

Avoid damaging the cleaning blade. If entering chain-link numbers for the Drum or Transfer Belt units, do not rotate the Drum or the Transfer Belt units for more than 60 seconds.

4. Enter the chain-link number of the Input/Output components (Table 1 and Table 2) using the keypad and touch **OK**.

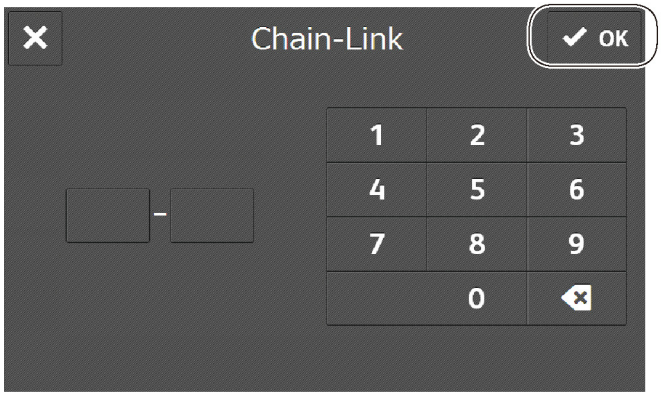

5. Touch **Start**. The component will start operating.

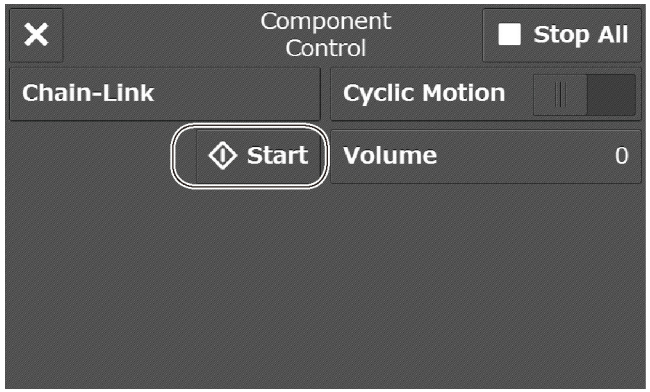

- The status of the latest turned ON component is displayed on the screen.
- A beep will sound according to the status of input components. The volume can be set by selecting **Volume**.
- **Input / Output** column (component type), **Status** column (Operation status: High/Low), and **Counter** column (Operation Count) are displayed on the **Component Control** screen.

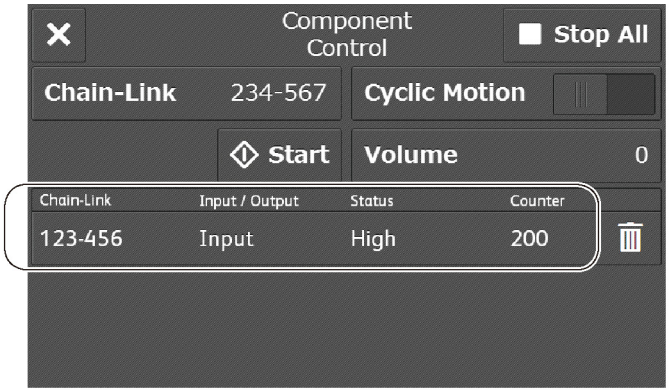

6. If running additional components, repeat the steps to enter their chain-link codes and start each component.
7. When finished operating components, touch **Stop All** to stop all component operations, or the **Trash Can** icon to stop an individual component operation.

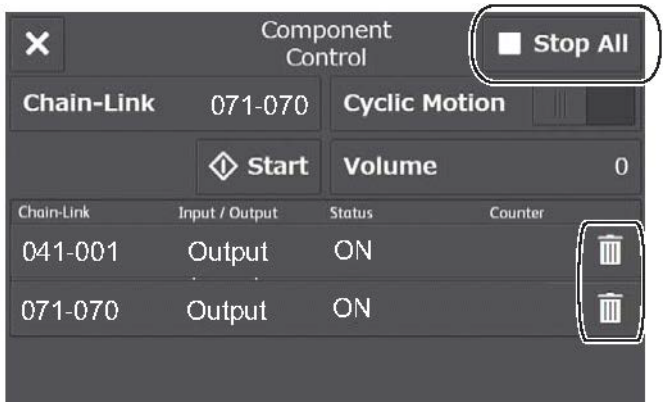

8. Touch **X** to return to the **Diagnostics** screen.
9. Exit the Diagnostics, GP 1.

SFP Procedure

This procedure demonstrates an example executing the chain-links for the following two components at the same time:

- 041-001: Low Voltage Power Supply 24V
- 071-069: Motor (Normal: Main&Sub)

CAUTION

Avoid damaging the cleaning blade. If entering chain-link numbers for the Drum or Transfer Belt units, do not rotate the Drum or the Transfer Belt units for more than 60 seconds.

1. Enter the Diagnostics, [GP1].
2. Navigate to **Fault Diag** (press the Down Arrow).
3. Navigate to **DC330 Components** (press the Right Arrow, then the Down Arrow).
4. Navigate to the **Component Input** screen for entering a chain-link number (press the Right Arrow twice).
5. Following the example, enter the chain-link number 041-001 (Low Voltage Power Supply 24V) and press **OK**. An asterisk appears when the value is set.

   Use the Up/Down Arrows to change the value at the cursor position, and the Left/Right Arrows to change the cursor's position.

   NOTE: *To use other chain-link numbers, see Table 1 for Input Components and Table 2 for Output Components.*
6. To run the selected component, press **OK**. In this example, the chain-link 041-001 appears in the **Component List** screen and 24V turns on.
7. To enter the second chain-link in the example, return to the **Component Input** screen (press the Left Arrow, the Up Arrow, then the Right Arrow).
8. Following the example, enter the chain-link number 071-069 (Motor (Normal: Main&Sub)) and press **OK**. An asterisk appears when the value is set.
9. To run the selected component, press **OK**. In this example, the chain-link 071-069 appears in the **Component List** and the motor turns.
10. To view all chain-link numbers in the **Component List**, press the Down Arrow.
11. To stop the components from running, stop the motor first, then turn off the 24V:
    a. Display the chain-link number 071-069 in the **Component List** screen, then press **Stop**. The motor stops.
    b. Display the chain-link number 041-001 in the **Component List** screen, then press **Stop**. The 24V turns off.
12. To delete all chain-link numbers from the **Component List**:
    a. Navigate to the **Delete All** screen (press the Left Arrow, then the Down Arrow).
    b. Navigate to the **Delete All** > **Press OK to run** command (press the Right Arrow).
    c. Press **OK**. The values in the **Component List** disappear. In this example, this deletes 041-001 and 071-069 at the same time.
13. Exit the Diagnostics, [GP1].

dC362 Restore NVM Values

CAUTION

Do not use. This function does not operate. See dC363.

dC363 NVM Backup/Restore

Description

To back up / restore the NVM Values.

Use this function when exchanging the MCU. Back up NVM values before removing the MCU, then restore NVM values after replacing the MCU. Do not use when exchanging the ESS. Use, also when initializaing the IOT area with dC301.

MFP Procedure

1. Enter the Diagnostics, GP 1.
2. Touch **DC363 NVM Backup Restore**.
   The **NVM Backup Restore** screen is displayed.
3. Touch **Back Up Files** or **Restore Files** and touch **Start**.

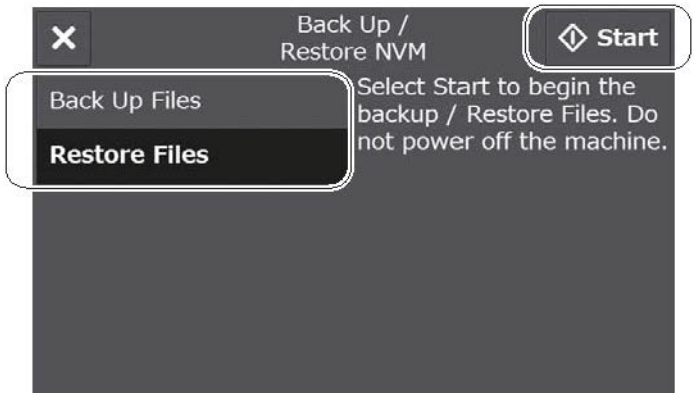

4. Follow the message shown on the **Back Up / Restore NVM** screen and touch **Yes** or **No**.

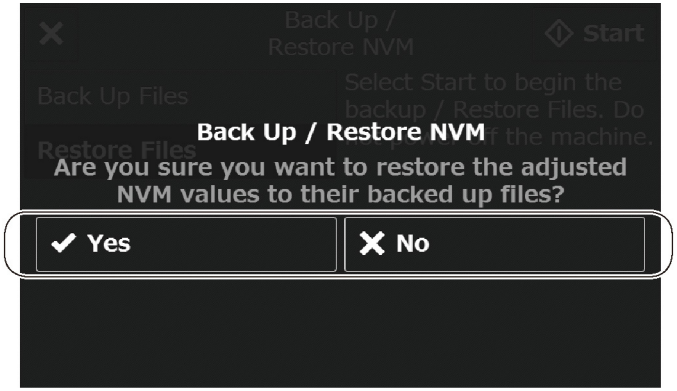

5. Touch **X** to return to the **Diagnostics** screen.
6. Exit the Diagnostics, GP 1.

SFP Procedure

1. Enter the Diagnostics, GP 1.
2. Navigate to **Adjustment** (press the Down Arrow).
3. Navigate to **DC363 IOT NVM** (press the Right Arrow, then the Down Arrow).
4. Navigate to the **DC363 IOT NVM** commands (press the Right arrow).
5. Select the **Backup** or **Restore** command (press the Up/Down Arrows, then press the Right Arrow).
6. After selecting a command the screen displays **Press OK to run**.
7. To run the command, press **OK**. The screen displays **Completed** when the process has finished.
8. Exit the Diagnostics, GP 1.

dC500 Blank Page Threshold Value

Description

To set the value that is used to determine what is a blank document when performing blank page detection for Fax machines.

(For machines that are frequently used by visually impaired users, the CE performs document background settings using this tool.)

Procedure

1. Enter the Diagnostics, GP 1.
2. Touch **DC500 Blank Page Threshold Value**.
   The **Blank Page Threshold Value** screen is displayed.
3. Follow the message and place a blank sheet of paper (A or A4) on the DADF.
4. Touch **Start**.

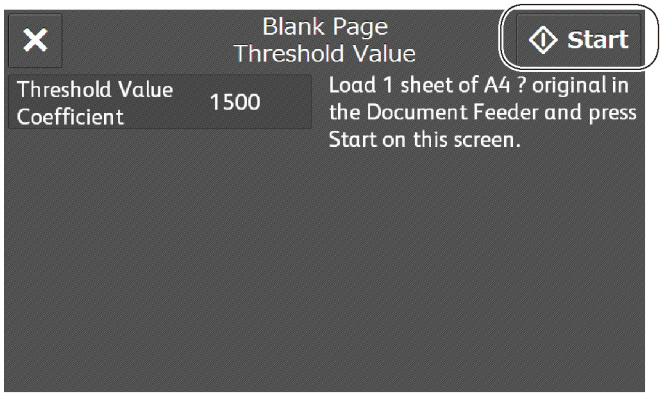

5. The DADF does a one-sided scan, the **Threshold Value Coefficient** is displayed and set.
6. Touch **X** to return to the **Diagnostics** screen.
7. Exit the Diagnostics, GP 1.

dC612 Print Test Pattern

Description

Prints a Test Pattern that is stored in the printer for checking image quality and isolating problems.

NOTE: *Perform this operation after verifying that there is enough paper loaded in the Tray to be used. (If the* ***No Paper*** *condition occurs during the execution, a printing failure may occur on the paper that is being run. The paper used during this function is not counted.)*

MFP Procedure

1. Enter the Diagnostics, GP 1.
2. Touch **DC612 Print Test Pattern**. to display the **Print Test Pattern** screen.
3. Set the values for the following parameters (see Table 1 and Table 2).

   NOTE: *Test patterns require specific settings for some of these parameters.*

   - Pattern Number
   - Quantity
   - Paper Supply
   - Output Color
   - Cin%
   - Screen
   - 2-Sided
4. Touch **Start**..

   NOTE: *If the settings for a test pattern are wrong, the message appears: [Invalid parameter. Please re-enter.] and the Print Test Pattern cannot be performed. In this case, change the settings and repeat the test print.*

5. Touch **X** to return to the **Diagnostics** screen.
6. Exit the Diagnostics, GP 1.

SFP Procedure

1. Enter the Diagnostics, GP 1.
2. Navigate to **Fault Diag.** (press the Down Arrow).
3. Navigate to **DC612 PatternPrt** (press the Right Arrow, then the Down arrow).
4. Navigate to the **Pattern** screen for selecting a test pattern (press the Right arrow twice)
5. To select a test pattern, enter a test pattern number, then press **OK**. See Table 1 and Table 2 for available patterns. An asterisk appears when the number is set.

   Use the Up/Down Arrows to change the value at the cursor position, and the Left/Right Arrows to change the cursor's position.
6. To continue entering values for other test pattern settings, press the Left Arrow.

   Press the Up/Down Arrows to scroll through the settings. Press the Right Arrow to select a setting. These are the basic settings. Others may appear depending on set values:

   - Quantity
   - Tray
   - Simp/Dup
7. To change the default value for a setting, press the Right Arrow to access the setting, then press the Up/Down Arrows and press **OK** to set the value. An asterisk appears when the value is set.
8. Continue changing the setting values if needed.
9. To print the test pattern, scroll through the list of settings to **Press OK to run**, then press **OK**.
10. Exit the Diagnostics, GP 1.

Pattern Numbers and Images

Table 1 includes the print test patterns commonly used to check image quality and isolate problems. The table gives the test pattern numbers, names, pattern images, and parameter settings. See Table 2 for a list of additional test patterns available in the printer.

Table 1 Commonly Used Test Patterns

No.	Pattern name / Image	Settings
1	Grid 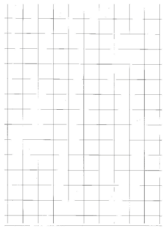	• **Quantity:** 1-999 • **Paper Supply:** – 8.5x11 Bypass – 8.5x11 Tray 1 • **Output Color:** Black (Mono) • **Cin%:** (use default) • **Screen:** (use default) • **2-Sided:** (choose preference)
14	YMCK half-tone	• **Quantity:** 1-999 • **Paper Supply:** – 8.5x11 Bypass – 8.5x11 Tray 1 • **Output Color:** 4C: Full Color • **Cin%:** (use default) • **Screen:** (use default) • **2-Sided:** (choose preference)
15	YMCK 100%	• **Quantity:** 1-999 • **Paper Supply:** – 8.5x11 Bypass – 8.5x11 Tray 1 • **Output Color:** 4C: Full Color • **Cin%:** (use default) • **Screen:** (use default) • **2-Sided:** 1-Sided

Table 1 Commonly Used Test Patterns

No.	Pattern name / Image	Settings
21	Blank print (no image) 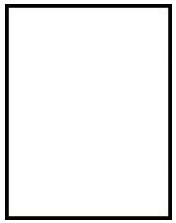	• **Quantity:** 1-999 • **Paper Supply:** – 8.5x11 Bypass – 8.5x11 Tray 1 • **Output Color:** 4C: Full Color • **Cin%:** (use default) • **Screen:** (use default) • **2-Sided:** 1-Sided
51	Manufacturing test patterns	• **Quantity:** 1-999 • **Paper Supply:** – 8.5x11 Bypass – 8.5x11 Tray 1 • **Output Color:** – Black (Mono) – 4C: Full Color • **Cin%:** (use default) • **Screen:** Standard / Gradation / Fineness • **2-Sided:** (choose preference)
56	YMCKRGB gradation	• **Quantity:** 1-999 • **Paper Supply:** – 8.5x11 Bypass – 8.5x11 Tray 1 • **Output Color:** 4C: Full Color • **Cin%:** (use default) • **Screen:** Standard / Gradation / Fineness • **2-Sided:** (choose preference)

Table 1 Commonly Used Test Patterns

No.	Pattern name / Image	Settings
59	Solid fill (full / half-tone)	• **Quantity:** 1-999 • **Paper Supply:** – 8.5x11 Bypass – 8.5x11 Tray 1 • **Output Color:** – R: Red – G: Green – B: Blue – C: Cyan – M: Magenta – Y: Yellow – K: Black (Color) – 3C: 3 Color – 4C: Full Color – BW: Black (Mono) • **Cin%:** 0-100% • **Screen:** Standard / Gradation / Fineness • **2-Sided:** (choose preference)
64	Pitch (repeating defects) 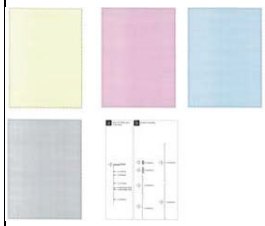	• **Quantity:** 1-999 • **Paper Supply:** – 8.5x11 Bypass – 8.5x11 Tray 1 • **Output Color:** 4C: Full Color • **Cin%:** (use default) • **Screen:** Standard / Gradation / Fineness • **2-Sided:** (choose preference)
66	YMCK (vertical)	• **Quantity:** 1-999 • **Paper Supply:** – 8.5x11 Bypass – 8.5x11 Tray 1 • **Output Color:** 4C: Full Color • **Cin%:** (use default) • **Screen:** Standard / Gradation / Fineness • **2-Sided:** (choose preference)

Table 1 Commonly Used Test Patterns

No.	Pattern name / Image	Settings
280	All bundle print out (A4)	• **Quantity:** 1-999 • **Paper Supply:** – 8.5x11 Bypass – 8.5x11 Tray 1 • **Output Color:** 4C: Full Color • **Cin%:** (use default) • **Screen:** Special Usage • **2-Sided:** 1-Sided
281	All bundle print out (Inch)	• **Quantity:** 1-999 • **Paper Supply:** – 8.5x11 Bypass – 8.5x11 Tray 1 • **Output Color:** 4C: Full Color • **Cin%:** (use default) • **Screen:** Special Usage • **2-Sided:** 1-Sided

Additional Test Patterns

Table 2 includes additional print test patterns that may be useful to check image quality and isolate problems. The table gives the test pattern numbers, names. and parameter settings.

Table 2 Additional Test Patterns

No.	Pattern name / Image	Settings
22	LPH Chart LM /Y LPH to analyze the image defect of Y and Video data	• **Quantity:** 1-999 • **Paper Supply:** – 8.5x11 Bypass – 8.5x11 Tray 1 • **Output Color:** 4C: Full Color • **Cin%:** (use default) • **Screen:** (use default) • **2-Sided:** 1-Sided

Table 2 Additional Test Patterns

No.	Pattern name / Image	Settings
23	LPH Chart LM /M LPH to analyze the image defect of M and Video data	• **Quantity:** 1-999 • **Paper Supply:** – 8.5x11 Bypass – 8.5x11 Tray 1 • **Output Color:** 4C: Full Color • **Cin%:** (use default) • **Screen:** (use default) • **2-Sided:** 1-Sided
24	LPH Chart LM /C LPH to analyze the image defect of C and Video data	• **Quantity:** 1-999 • **Paper Supply:** – 8.5x11 Bypass – 8.5x11 Tray 1 • **Output Color:** 4C: Full Color • **Cin%:** (use default) • **Screen:** (use default) • **2-Sided:** 1-Sided
25	LPH Chart LM /K LPH to analize the image defect of BK and Video data	• **Quantity:** 1-999 • **Paper Supply:** – 8.5x11 Bypass – 8.5x11 Tray 1 • **Output Color:** – K: Black (Color) – BW: Black (Mono) • **Cin%:** (use default) • **Screen:** (use default) • **2-Sided:** 1-Sided
53	Total Chart(A4) (Multi-value, 600dpi)	• **Quantity:** 1-999 • **Paper Supply:** – 8.5x11 Bypass – 8.5x11 Tray 1 • **Output Color:** – BW: Black (Mono) – 4C: Full Color • **Cin%:** (use default) • **Screen:** Standard / Gradation / Fineness / Special Usage • **2-Sided:** (choose preference)

Table 2 Additional Test Patterns

No.	Pattern name / Image	Settings
54	C-TRACS Confirmation PG (A4/Print)	• **Quantity:** 1-999 • **Paper Supply:** – 8.5x11 Bypass – 8.5x11 Tray 1 • **Output Color:** 4C: Full Color • **Cin%:** (use default) • **Screen:** Standard / Gradation / Fineness • **2-Sided:** (choose preference)
55	C-TRACS Confirmation PG (A4/Print)	• **Quantity:** 1-999 • **Paper Supply:** – 8.5x11 Bypass – 8.5x11 Tray 1 • **Output Color:** 4C: Full Color • **Cin%:** 0-100% • **Screen:** Standard / Gradation / Fineness • **2-Sided:** (choose preference)
57	ProconPG(A4)to analize the image defect multi-value image	• **Quantity:** 1-999 • **Paper Supply:** – 8.5x11 Bypass – 8.5x11 Tray 1 • **Output Color:** 4C: Full Color • **Cin%:** (use default) • **Screen:** Standard / Gradation / Fineness • **2-Sided:** (choose preference)
58	SDTP124600 (Grid chart of mono) to check align-ment	• **Quantity:** 1-999 • **Paper Supply:** – 8.5x11 Bypass – 8.5x11 Tray 1 • **Output Color:** – BW: Black (Mono) – 4C: Full Color • **Cin%:** (use default) • **Screen:** Standard • **2-Sided:** (choose preference)

Table 2 Additional Test Patterns

No.	Pattern name / Image	Settings
60	Banding chart (A4)	• **Quantity:** 1-999 • **Paper Supply:** – 8.5x11 Bypass – 8.5x11 Tray 1 • **Output Color:** 4C: Full Color • **Cin%:** (use default) • **Screen:** Standard / Gradation / Fineness • **2-Sided:** (choose preference)
61	HT Drum pitch (A4)	• **Quantity:** 1-999 • **Paper Supply:** – 8.5x11 Bypass – 8.5x11 Tray 1 • **Output Color:** 4C: Full Color • **Cin%:** (use default) • **Screen:** Standard / Gradation / Fineness • **2-Sided:** (choose preference)
62	Ghost Chart	• **Quantity:** 1-999 • **Paper Supply:** – 8.5x11 Bypass – 8.5x11 Tray 1 • **Output Color:** 4C: Full Color • **Cin%:** (use default) • **Screen:** Standard / Gradation / Fineness • **2-Sided:** (choose preference)
63	Color Regi A4 for mea-surement	• **Quantity:** 1-999 • **Paper Supply:** – 8.5x11 Bypass – 8.5x11 Tray 1 • **Output Color:** 4C: Full Color • **Cin%:** (use default) • **Screen:** Standard / Gradation / Fineness / Special Usage • **2-Sided:** (choose preference)
65	4-color confirmation chart to analyze the image defect	• **Quantity:** 1-999 • **Paper Supply:** – 8.5x11 Bypass – 8.5x11 Tray 1 • **Output Color:** 4C: Full Color • **Cin%:** (use default) • **Screen:** Standard / Gradation / Fineness • **2-Sided:** (choose preference)

Table 2 Additional Test Patterns

No.	Pattern name / Image	Settings
102	Procon PG/Binary	• **Quantity:** 1-999 • **Paper Supply:** – 8.5x11 Bypass – 8.5x11 Tray 1 • **Output Color:** 4C: Full Color • **Cin%:** (use default) • **Screen:** Copy Error Diffusion • **2-Sided:** 1-Sided
104	Calibration/Binary (For creating originals)	• **Quantity:** 1-999 • **Paper Supply:** – 8.5x11 Bypass – 8.5x11 Tray 1 • **Output Color:** 4C: Full Color • **Cin%:** (use default) • **Screen:** Copy Error Diffusion • **2-Sided:** 1-Sided
106	Calibration/Binary (For confirming gradation)	• **Quantity:** 1-999 • **Paper Supply:** – 8.5x11 Bypass – 8.5x11 Tray 1 • **Output Color:** 4C: Full Color • **Cin%:** (use default) • **Screen:** Copy Error Diffusion • **2-Sided:** 1-Sided
108	Highlight PG/Binary	• **Quantity:** 1-999 • **Paper Supply:** – 8.5x11 Bypass – 8.5x11 Tray 1 • **Output Color:** 4C: Full Color • **Cin%:** (use default) • **Screen:** Copy Error Diffusion • **2-Sided:** 1-Sided
113	Pre IPS/FS Increment RGB	• **Quantity:** 1-999 • **Paper Supply:** – 8.5x11 Bypass – 8.5x11 Tray 1 • **Output Color:** 4C: Full Color • **Cin%:** (use default) • **Screen:** Copy Error Diffusion • **2-Sided:** 1-Sided

Table 2 Additional Test Patterns

No.	Pattern name / Image	Settings
117	Pre IPS/SS Increment RGB	• **Quantity:** 1-999 • **Paper Supply:** – 8.5x11 Bypass – 8.5x11 Tray 1 • **Output Color:** 4C: Full Color • **Cin%:** (use default) • **Screen:** Copy Error Diffusion • **2-Sided:** 1-Sided
122	Pre IPS/Shading Data Color	• **Quantity:** 1-999 • **Paper Supply:** – 8.5x11 Bypass – 8.5x11 Tray 1 • **Output Color:** 4C: Full Color • **Cin%:** (use default) • **Screen:** Copy Error Diffusion • **2-Sided:** 1-Sided
124	Pre IPS/YMCK Vertical Stripes	• **Quantity:** 1-999 • **Paper Supply:** – 8.5x11 Bypass – 8.5x11 Tray 1 • **Output Color:** 4C: Full Color • **Cin%:** (use default) • **Screen:** Copy Error Diffusion • **2-Sided:** 1-Sided
125	Pre IPS/8-Shaded Patch	• **Quantity:** 1-999 • **Paper Supply:** – 8.5x11 Bypass – 8.5x11 Tray 1 • **Output Color:** 4C: Full Color • **Cin%:** (use default) • **Screen:** Copy Error Diffusion • **2-Sided:** 1-Sided
126	Pre IPS/Solid	• **Quantity:** 1-999 • **Paper Supply:** – 8.5x11 Bypass – 8.5x11 Tray 1 • **Output Color:** 4C: Full Color • **Cin%:** (use default) • **Screen:** Copy Error Diffusion • **2-Sided:** 1-Sided

Table 2 Additional Test Patterns

No.	Pattern name / Image	Settings
127	Post IPS/Grid/4C	• **Quantity:** 1-999 • **Paper Supply:** – 8.5x11 Bypass – 8.5x11 Tray 1 • **Output Color:** 4C: Full Color • **Cin%:** (use default) • **Screen:** Copy Error Diffusion • **2-Sided:** 1-Sided
128	Post IPS/Grid/BW	• **Quantity:** 1-999 • **Paper Supply:** – 8.5x11 Bypass – 8.5x11 Tray 1 • **Output Color:** K: Black (Color) • **Cin%:** (use default) • **Screen:** Copy Error Diffusion • **2-Sided:** 1-Sided
129	Post IPS/FSRE/Grid	• **Quantity:** 1-999 • **Paper Supply:** – 8.5x11 Bypass – 8.5x11 Tray 1 • **Output Color:** 4C: Full Color • **Cin%:** (use default) • **Screen:** Copy Error Diffusion • **2-Sided:** 1-Sided
130	Post IPS/FSRE/Diagonal Grid	• **Quantity:** 1-999 • **Paper Supply:** – 8.5x11 Bypass – 8.5x11 Tray 1 • **Output Color:** 4C: Full Color • **Cin%:** (use default) • **Screen:** Copy Error Diffusion • **2-Sided:** 1-Sided
168	Copy ED 24 Shades Patch FC1600	• **Quantity:** 1-999 • **Paper Supply:** – 8.5x11 Bypass – 8.5x11 Tray 1 • **Output Color:** 4C: Full Color • **Cin%:** (use default) • **Screen:** Copy Error Diffusion • **2-Sided:** 1-Sided

Table 2 Additional Test Patterns

No.	Pattern name / Image	Settings
169	Copy ED 24 Shades Patch FC2	• **Quantity:** 1-999 • **Paper Supply:** – 8.5x11 Bypass – 8.5x11 Tray 1 • **Output Color:** 4C: Full Color • **Cin%:** (use default) • **Screen:** Copy Error Diffusion • **2-Sided:** 1-Sided
170	Copy ED 24 Shades Patch BW	• **Quantity:** 1-999 • **Paper Supply:** – 8.5x11 Bypass – 8.5x11 Tray 1 • **Output Color:** BW: Black (Mono) • **Cin%:** (use default) • **Screen:** Copy Error Diffusion • **2-Sided:** 1-Sided

dC671 Registration Measuring Cycle

Description

To measure the color registration for four colors and display the status by indicating **OK/NG** (Check or Adjustment).

This cycle performs the color registration measurement that includes the detection of AC component to determine the condition of AC control (Drum Drive, Belt Drive, and Belt Steering, etc), which is one of the color registration components.

- Performs registration measurement to determine the condition of the AC control.
- Checks that the Belt control, etc. are operating normally.
- Measures/displays the amount of color shift relative to Black in the Fast Scan/Slow Scan direction.
- Displays the result of comparing **OK**/**NG** with the target value.

MFP Procedure

1. Enter the Diagnostics, GP 1.
2. Touch **DC671 Registration Measuring Cycle**.
   The **Registration Measuring Cycle** screen is displayed.
3. Touch **Start. OK** or **NG** will be displayed in the **Result** field.
   - When **NG** is displayed, refer to the corresponding FIP and correct the problem.
   - If the result is **NG** for both AC/DC, fix the AC problem first.

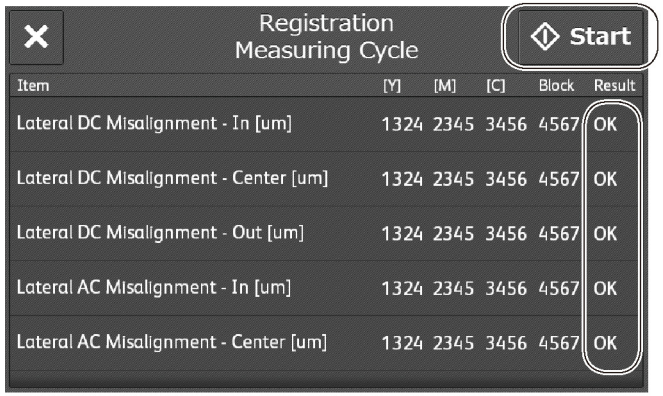

4. Touch **X** to return to the **Diagnostics** screen.
5. Exit the Diagnostics, GP 1.

SFP Procedure

See Table 1 for details about the items measured by this function. The details include the full name for each measurement item, the unit of measurement, the possible measurement results, and the target color.

Table 1 Color Registration Measurement Items

Item	Unit	Result	Note
L-DC-I/O (Lateral DC Misalignment, IN/OUT side)	µm	OK/NG	Target color: Y, M, C
L-AC-I/O (Lateral AC Misalignment, IN/OUT side)	µm	OK/NG	Target color: Y, M, C
P-DC-I/O (Process DC Misalignment, IN/OUT side)	µm	OK/NG	Target color: Y, M, C
P-AC-I/O (Process AC Misalignment, IN/OUT side)	µm	OK/NG	Target color: Y, M, C
Number of Patterns Detected, IN/OUT side)	Block	OK/NG	Target color: Y, M, C

1. Enter the Diagnostics, GP 1.
2. Navigate to **SubSystem Check** (press the Down Arrow).
3. Navigate to **DC671 RegiMeasure** (press the Right Arrow).
4. To run the registration measurement, press the Right Arrow, then press **OK**. The screen displays **Results** when the measurement is done.
5. To view the results, press the Down Arrow. Table 1 shows additional details about the measured items. The results appear in the following order:
   - L-DC-I
   - L-DC-O
   - L-AC-I
   - L-AC-O
   - P-DC-I
   - P-DC-O
   - P-AC-I
   - P-AC-O
   - IN/OUT (Number of Patterns Detected)
6. Exit the Diagnostics, GP 1.

dC673 Registration Control Sensor Check Cycle

Description

Checks if the misregistration detection system from the Registration Control (MOB Sensor) is operating normally.

This is a self diagnostic cycle to check that the detection system operates properly.

To verify that the detection result is **Zero Misregistration**, the color shift amount is detected using CUI patch (Cyan monochromaticity) and the misregistration detected in the MOB sensor is displayed on the UI screen.

This detection result is compared again with the target value to determine the **OK/NG** result which will be displayed. Correction is not performed.

MFP Procedure

1. Enter the Diagnostics, GP 1.
2. Touch **DC673 Registration Control Sensor Check Cycle**.
   The **Registration Control Sensor Check Cycle** screen is displayed.
3. Touch **Start**.The **Value** will be displayed along with **OK** or **NG**.
   When the measure value is larger than the target value by 10, **NG** is displayed.
   When **NG**, check that Cyan is being printed and replace the CTD Sensor Assembly.
   When Cyan is not being printed, repair the Marking accessories including the Drum Cartridge.

   NOTE: *If Cyan is suspected of not printing, Pattern No. 15 - **YMCK 100%** in dC612 can be used to perform checking.*

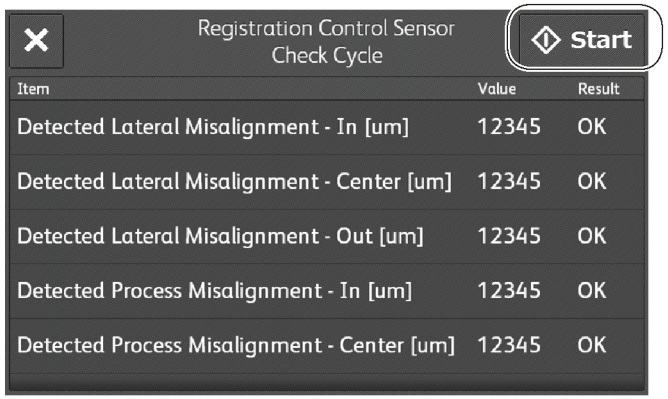

4. Touch **X** to return to the **Diagnostics** screen.
5. Exit the Diagnostics, GP 1.

SFP Procedure

See Table 1 for details about the items checked by this function. The details include the full name for each checked item, the unit of measurement, and the possible results.

Table 1 Registration Control Sensor Check Items

Item	Unit	Result
L-IN (Detected Lateral Misalignment, IN side)	µm	OK/NG
L-OUT (Detected Lateral Misalignment, OUT side)	µm	OK/NG
P-IN (Detected Process Misalignment, IN side)	µm	OK/NG
P-OUT (Detected Process Misalignment, OUT side)	µm	OK/NG

1. Enter the Diagnostics, GP 1.
2. Navigate to **SubSystem Check** (press the Down Arrow).
3. Navigate to **DC673 Regi Check** (press the Right Arrow, then the Down Arrow).
4. To run the registration check, press the Right Arrow, then press **OK**. The screen displays **Results** when the check is done.
5. To view the results, press the Down Arrow. Table 1 shows additional details about the checked items. The results appear in the following order:
   - L-IN
   - L-OUT
   - P-IN
   - P-OUT
6. Exit the Diagnostics, GP 1.

dC675 Registration Control Setup Cycle

Description

To set the most appropriate Regi Control correction value for skew etc. at the first execution when replacing the LPH, etc.

The Setup Cycle is made up of the following two functions:

- Function 1: Performed right after assembling or during field installation or when replacing a key part. Also, this is a Regi Control Full Cycle that can be performed in the Diag mode right after the NVM is initialized. Executing this function corrects the Color Registration into the predefined range. The corrected shift amount for each color is saved in the NVM and it is displayed at normal completion.
- Function 2: On entering a setup cycle, the IOT does not start. The Regi Control shift correction amount is displayed automatically on the UI screen and is used as a tool for determining the cause when a failure occurs.

Perform this diagnostic function for the following operations. After that, perform **DC671 Regi Measuring Cycle**.

- LPH replacement/detachment
- Transfer Roller replacement/detachment
- Transfer Belt replacement/detachment
- Drum Cartridge replacement/detachment

If a Fail occurs after performing this cycle, take corrective action on the Fail that has occurred and then perform the Registration Control Setup again. (The appropriate alignment adjustment cannot be performed if Registration Control Setup Cycle is not completed successfully.)

MFP Procedure

1. Enter the Diagnostics, GP 1.
2. Touch **DC675 Registration Control Setup Cycle**.
   The **Registration Control Setup Cycle** screen is displayed.
3. Touch **Start**.The shift amount for each color is corrected automatically.

4. Touch **X** to return to the **Diagnostics** screen.
5. Exit the Diagnostics, GP 1.

SFP Procedure

See Table 1 for details about the items checked by this function. The details include the full name for each checked item, the unit of measurement, and the possible results.

Table 1 Registration Control Setup Items

Item
Fast Scan Margin (Y, M, C, K)
Slow Scan Margin (Y, M, C, K)
Skew (Y, M, C, K)
BOW (Y, M, C, K)
Temperature
Offset

1. Enter the Diagnostics, GP 1.
2. Navigate to **SubSystem Check** (press the Down Arrow).
3. Navigate to **DC675 Regi Setup** (press the Right Arrow, then the Down Arrow).
4. To scroll through the current adjustment values of each item, press the Right Arrow, then press the Down Arrow. The adjusted values for the items appear in the following order:
   - Fast Scan Margin (Y, M, C, K)
   - Slow Scan Margin (Y, M, C, K)
   - Skew (Y, M, C, K)
   - BOW (Y, M, C, K)
   - Temperature
   - Offset
5. To run the Control Setup routine, continue pressing the Down Arrow until the screen displays **Press OK to run**, then press **OK**.
6. The screen displays the **Results** when the routine is done.
7. Exit the Diagnostics, GP 1.

dC919 Color Balance Adjustment

Description

To perform fine adjustment of the center value of the Shadows/Midtones/Highlights output balance for each color Y, M, C and K (Black) for copy images.

The center of color adjustment in Customer Mode will be changed by this setup.

- This adjustment is only applicable to the copy function.
- Perform this adjustment only when requested by the customer.

Operation Content

- To select the color balance adjustment value from -4 to +4 (9 levels) for the respective Shadow, Midtone, and Highlight outputs of each Y, M, C, K (Black) color. **0** is the default value. The image will become lighter from -1 to -4, and darker from +1 to +4.
- Image adjustment is carried out in the TRC section of the IIT/IPS according to the set value.
- Keep the set value as the NVM of the IISS.
- When the Output Color is **BW**, the adjustment value for **K** becomes effective.

Procedure

1. Enter the Diagnostics, GP 1.
2. Touch **DC919 Color Balance Adjustment**. The Color Balance Adjustment screen is displayed.
3. Change the respective Shadow, Midtone, and Highlight values for each color within the range of -4 to +4 then touch **OK**.

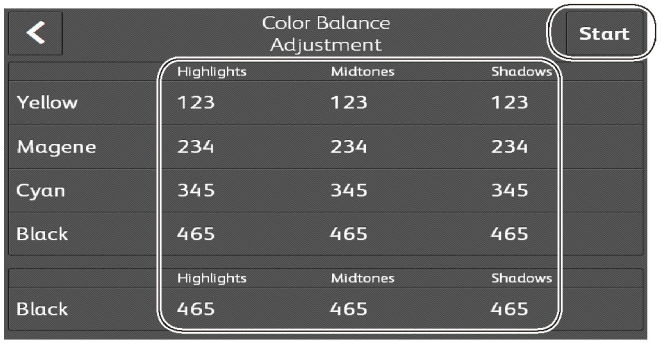

4. Touch **X** to return to the **Diagnostics** screen.
5. Exit the Diagnostics, GP 1.
6. Make a copy/print and confirm that the image quality meets the customer's request.

dC924 TRC Adjust

Description

Manual Density Adjustment sets the offset amount of the ADC-LUT created by the ADC patch and finely adjusts the gradation.

NOTE: *Perform this adjustment only when requested by the customer.*

NOTE: *When performing this adjustment, make sure that there is no problem with the IOT. After performing the Calibration, perform adjustment only for density, especially highlight or central gradation when necessary.*

MFP Adjustment Overview and Procedure

- The gradation adjustment amount can be set from the screen in 1/128 units (-128 to +127) for the L/M/H gradation of each color Y, M, C and K. (0 indicates no adjustment. + numbers increase the density, and - numbers reduce the density).
- The actual ADC_LUT change takes place during the ADC_LUT calculation after the next ADC patch is created. Therefore, perform checking, e.g. by performing PCON_ON_Print output.
- The switch **Target** on the screen can be used to individually set whether TRC_Adjust applies to Print or Copy.
- Upon entering the adjustment screen, the M LUT **NVM Value** for the L/M/H of each color **Y**, **M**, **C** and **K** and the status of the switch **Target** will be displayed.
- The M LUT **NVM Value** for each color can be changed on the adjustment screen.
- **None**, **Copy Jobs Only**, or **Copy & Print Jobs** is displayed for the status of the switch **Target**. This setting can be changed from the screen.
- Tapping **Start** updates the NVM according to the M LUT **NVM Value** and **Target** status that are displayed on the screen.
- Only the NVM for M LUT **NVM Value** and **Target** is updated. The ADC_LUT is not updated.

MFP Procedure

1. Enter the Diagnostics, GP 1.
2. Touch **DC924 TRC Adjust**. The TRC Adjust screen is displayed.
3. Touch **Target** and select an option from the following:
   - **None**
   - **Copy Jobs Only**
   - **Copy & Print Jobs**
4. Select the target color and change each value (-129 to +127), then touch **Adjust** to save the new value(s).
5. Touch **X** to return to the **Diagnostics** screen.
6. Exit the Diagnostics, GP 1.
7. Make a copy/print and confirm that the image quality meets the customer requirements.

SFP Procedure

1. Enter the Diagnostics, GP 1.
2. Navigate to **MAX Setup** (press the Down Arrow).
3. Navigate to **DC924 Adjust TRC** (press the Right arrow).

4. Navigate to the toner density adjustment screens (press the Right Arrow). The first toner adjustment screen is for the Y toner color.
5. To adjust density, move the cursor's position to the current value (press the Right/Left Arrows), then change then change the value (press the Up/Down Arrows). Do this for each of the groups L, M, and H.

   Range is 000 to 127 (higher values make the toner density darker)
6. To set the new value, press **OK**. An asterisk appears when the value is set.
7. To move to the remaining toner colors to be set (M, C, K), press the Down Arrow, then change and set the density values.
8. Exit the Diagnostics, GP 1.
9. Make a copy/print and confirm if the image quality meets the customer's request.

dC939 Procon On / Off Print

Description

The Procon On/Off Print consists of the following two modes.

- Procon "On" Print: This is a Print mode that uses the current Procon Data with the Procon (Process Control) Soft enabled and the TRC Adjustment enabled.
- Procon "Off" Print: This is a Print mode that uses only the features posessed by the IOT and with the Procon, etc. all turned OFF.

By comparing the above two modes, it is possible to identify whether the current print image quality is being affected by an image quality failure at the Procon, etc. or an image quality failure due to the status of the IOT elements.

Perform **Procon "On" Print** when the MOB_ADC (TMA) Assembly, LPH Assembly, ADC Sensor, MCU Board, or HVPS Board has been replaced.

MFP Procedure

Procon "On" Print Procedure

1. Enter the Diagnostics, GP 1.
2. Touch **DC939 Procon On / Off Print**.

   The **Procon On / Off Print** screen is displayed.
3. Touch **Procon-On Print**.

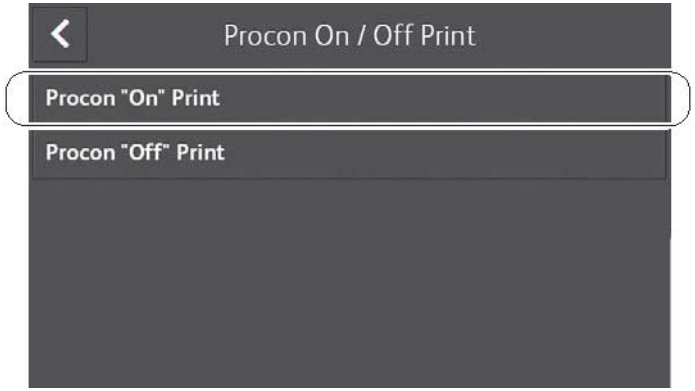

4. Load paper into Tray 1 and touch **Start**.

   One sheet of the built-in PG **Pcon PG** is output and the execution result is displayed.

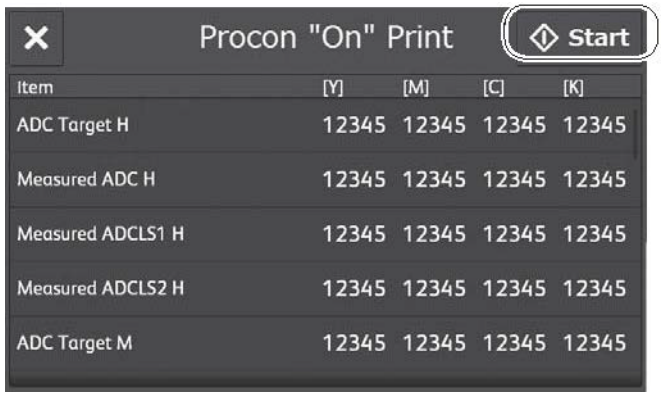

5. Check the image quality of the print in Procon ON status with the data displayed in image quality.
6. Touch **X** to return to the **Procon On / Off Print** screen.
7. Touch **<** to return to the **Diagnostics** screen.
8. Exit the Diagnostics, GP 1.

Procon "Off" Print Procedure

1. Enter the Diagnostics, GP 1.
2. Touch **DC939 Procon On / Off Print**.
   The **Procon On / Off Print** screen is displayed.
3. Touch **Procon-Off Print**.

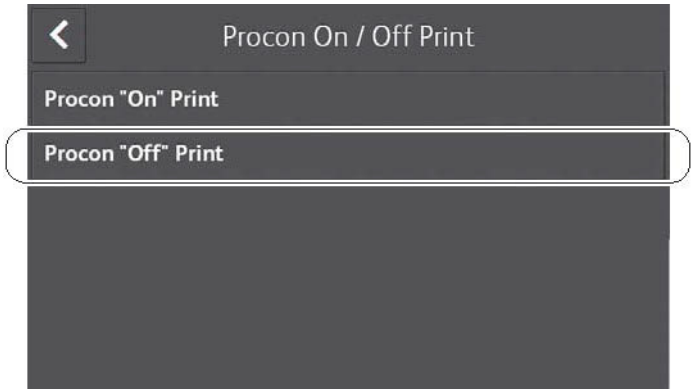

4. Load paper into Tray 1 and touch **Start**.
   One sheet of the built-in PG **Pcon PG** is output and the execution result is displayed.
5. Touch **X** to return to the **Procon On / Off Print** screen.
6. Touch **<** to return to the **Diagnostics** screen.
7. Exit the Diagnostics, GP 1.

SFP Procedure

See Table 1 for details about the Pcon Print values. The table shows the list of set values associated with each color.

Table 1 List of Set Values

Value Y	Value M	Value C	Value K	Other
SAD Target	SAD Target	SAD Target	SAD Target	Temperature
SAD Value	SAD Value	SAD Value	SAD Value	Humidity
TRC 2 Target	TRC 2 Target	TRC 2 Target	TRC 2 Target	-
TRC 2 Value	TRC 2 Value	TRC 2 Value	TRC 2 Value	-
TRC 1 Target	TRC 1 Target	TRC 1 Target	TRC 1 Target	-
TRC 1 Value	Trc 1 Value	TRC 1 Value	TRC 1 Value	-
LD Power	LD Power	LD Power	LD Power	-
Bias Setting	Bias Setting	Bias Setting	Bias Setting	-
TC Target	TC Target	TC Target	TC Target	-
TC Value	TC Value	TC Value	TC Value	-

Confirming the Set Value

1. Enter the Diagnostics, GP 1.
2. Navigate to **MAX Setup** (press the Down Arrow).
3. Navigate to **DC939 Pcon Print** (press the Right Arrow, then the Down Arrow).
4. Navigate to **Value** to view the set values shown in Table 1 (press the Right Arrow twice).
5. To view the value settings, press the Down Arrow.
6. Exit the Diagnostics, GP 1.

Turning Procon Print On/Off

1. Enter the Diagnostics, GP 1.
2. Navigate to **MAX Setup** (press the Down Arrow).
3. Navigate to **DC939 Pcon Print** (press the Right Arrow, then the Down Arrow).
4. Navigate to **Procon-On Print** or **Procon-Off Print** (press the Right Arrow, then the Down Arrow once or twice).
5. To run the selected **Procon Print** command, press the Right Arrow, then press **OK**.
   The screen displays **In progress** then the printer prints the built-in pattern and updates the measurements.
6. Check the image quality.
7. Exit the Diagnostics, GP 1.

dC945 IIT calibration

CAUTION

Do not use. This diagnostic function appears in the list of available functions; however, it is not used by this product.

dC991 Toner Density Adjustment

CAUTION

Do not use. This diagnostic function appears in the list of available functions; however, it is not used by this product .

Description

Adjusts toner density with Tone Up and Tone Down.

dC1010 Signals Sending Test

CAUTION

Do not use. This diagnostic function appears in the list of available functions; however, it is not used by this product .

Description

To test whether Fax signals are sent or not and how the sending level is adjusted by sending various signals to each channel.

dC1011 Relay On / Off Test

CAUTION

Do not use. This diagnostic function appears in the list of available functions; however, it is not used by this product .

Description

To test for trouble of the relay, voltage value, and current value by turning ON/OFF various relays that are used in the NCU.

Change Tags

Change Tag Introduction

This section describes tags associated with the printer, as well as multinational applicability, classification codes, and permanent or temporary modification information. Important modifications to the copier are identified by a tag number which is recorded on a tag matrix.

The tag matrix for the IOT is affixed to the chassis and can be accessed by removing tray 1 and the bypass tray.

Change Tags

There are no Change Tags currently in effect for this product.

7 Wiring

Plug and Jack Locations

MFP Plug / Jack Location List 7-3
SFP Plug / Jack Location List 7-8

System Wiring Diagrams

System Wiring Diagram Symbols 7-17
System Wiring Diagrams 7-17

Subsystem Wiring Diagrams

Subsystem Wiring Diagram Symbols 7-21
Subsystem Wiring Diagrams 7-22

Harness Routings

MFP Harness Routings 7-33
SFP Harness Routings 7-41

MFP Plug / Jack Location List

The P/J Locator diagrams show the location of primary connections within the MFP. Use these illustrations to locate connections called out in the procedures presented in Sections 2, 4, and 6. Connectors designated “CN” are listed at the end of the P/J connectors.

Harness connections appear in sections System Wiring Diagrams and Subsystem Wiring Diagrams.

How to find a P/J location:

1. Locate the P/J connector designator in the first column of Table 1.
2. With this information, refer to the Map column for the figure number.
3. Use the coordinates to find the P/J connector designator’s location on the map.

Table 1 Plug / Jack Locations (MFP)

P/J	Map	Coordinates	Connection
100	Figure 1	J-113	MCU Board and MCU-HVPS-C Harness Assembly
101	Figure 1	B-103	ESS Board and EMMC Board
110	Figure 1	H-113	MCU Board and Toner CRUM Harness Assembly
111	Figure 4	E-152	Toner CRUM Connector Assembly and Toner CRUM Harness Assembly
112	Figure 4	F-152	Toner CRUM Connector Assembly and Toner CRUM Harness Assembly
113	Figure 4	G-152	Toner CRUM Connector Assembly and Toner CRUM Harness Assembly
114	Figure 4	H-152	Toner CRUM Connector Assembly and Toner CRUM Harness Assembly
120	Figure 1	J-114	MCU Board and Dispenser Harness Assembly
121	Figure 4	E-152	Dispenser Drive Assembly and Dispenser Harness Assembly
122	Figure 4	G-152	Dispenser Drive Assembly and Dispenser Harness Assembly
140	Figure 1	J-113	MCU Board and Humidity RAD Harness Assembly
141	Figure 3	H-139	CTD Harness Assembly and Humidity RAD Harness Assembly
142	Figure 3	F-139	R-RAD Low Sensor and CTD Harness Assembly
143	Figure 3	H-139	R-RAD Sensor and CTD Harness Assembly
144	Figure 3	G-139	Humidity Harness Assembly and Humidity RAD Harness Assembly
145	Figure 3	G-139	Humidity & Temperature Sensor and Humidity Harness Assembly
270	Figure 1	I-114	MCU Board and DC Fuser Harness
272	Figure 3	H-137	Exit Sensor and DC Fuser Harness
273	Figure 3	I-137	Fuser Assembly and DC Fuser Harness
275	Figure 3	I-137	Fuser Assembly and AC Fuser Harness

Table 1 Plug / Jack Locations (MFP)

P/J	Map	Coordinates	Connection
280	Figure 1	J-113	MCU Board and MCU LV Harness Assembly
281	Figure 1	H-104	LVPS Board and Inlet Harness Assembly
283	Figure 1	H-103	LVPS Board and AC Fuser Harness
284	Figure 1	H-102	LVPS Board and MCU LV Harness Assembly
287	Figure 1	J-102	LVPS Board and ESS-PWR-C Harness Assembly
288	Figure 1	H-102	LVPS Board and MOT Harness Assembly
289	Figure 1	I-102	LVPS Board and Main Fan
290	Figure 1	I-102	None
291	Figure 1	H-102	LVPS Board and Side IL Harness Assembly
292	Figure 1	I-102	LVPS Board and Rear IL Harness Assembly
300	Figure 1	I-113	MCU Board and MCU ESS FFC
301	Figure 1	D-104	MFP ESS Board and ESS-PWR-C Harness Assembly
335	Figure 1	B-105	MFP ESS Board and MCU ESS FFC
340	Figure 1	A-104	MFP ESS Board and Ethernet
346	Figure 1	A-103	MFP ESS Board and USB Cable
353	Figure 1	D-103	MFP ESS Board and FAX Harness Assembly
356	Figure 1	C-103	MFP ESS Board and A4 FAX Speaker Assembly
380	Figure 1	A-104	None
400	Figure 1	I-113	MCU Board and Deve/Xero C Harness Assembly
401	Figure 4	D-154	Deve/Xero CRUM Y and Deve/Xero C Harness Assembly
402	Figure 4	D-153	Deve/Xero CRUM M and Deve/Xero C Harness Assembly
403	Figure 4	E-153	Deve/Xero CRUM C and Deve/Xero C Harness Assembly
404	Figure 4	E-153	Deve/Xero CRUM K and Deve/Xero C Harness Assembly
460	Figure 1	I-114	MCU Board and Deve CL Harness Assembly
461	Figure 2	F-121	Main Exit Drive Assembly and Deve CL Harness Assembly
462	Figure 2	G-121	Main Exit Drive Assembly and Deve CL Harness Assembly
463	Figure 6	I-182	Main Drive Assembly and Deve CL Harness Assembly
464	Figure 6	H-182	Main Drive Assembly and Deve CL Harness Assembly
465	Figure 6	H-182	Main Drive Assembly and Deve-Xero-C Sensor Harness Assembly
466	Figure 6	H-182	K Mode Sensor and K-SNR-C Harness Assembly
467	Figure 6	H-182	Deve/Xero-C Sensor Harness Assembly and Deve CL Harness Assembly
468	Figure 6	H-182	K-SNR-C Harness Assembly and Deve CL Harness Assembly
480	Figure 1	I-114	MCU Board and MSI CL Harness Assembly
481	Figure 2	H-124	MSI Drive Assembly and MSI CL Harness Assembly
482	Figure 2	H-124	MSI Feed Solenoid and MSI CL Harness Assembly
483	Figure 2	H-124	MSI No Paper Harness Assembly and MSI CL Harness Assembly

Table 1 Plug / Jack Locations (MFP)

P/J	Map	Coordinates	Connection
484	Figure 2	H-123	MSI No Paper Sensor and MSI No Paper Harness Assembly
485	Figure 6	E-183	Toner Full Sensor and MSI CL Harness Assembly
501	Figure 1	D-114	HVPS Board and K 1st Supply Harness Assembly
502	Figure 1	D-114	HVPS Board and YMC 1st Supply Harness Assembly
540	Figure 1	I-114	MCU Board and Regi-C Harness Assembly
541	Figure 7	F-200	Regi/Dup-C CLT Harness Assembly and Regi-C Harness Assembly
542	Figure 7	F-199	Regi Clutch Assembly and Regi/Dup-C CLT Harness Assembly
543	Figure 7	E-199	Regi D Bracket Assembly and Regi/Dup-C CLT Harness Assembly
544	Figure 7	F-200	Feed Clutch Harness Assembly and Regi-C Harness Assembly
545	Figure 7	E-200	Regi/NO Sensor Harness Assembly and Regi-C Harness Assembly
546	Figure 7	E-199	Regi Sensor and Regi/NO Sensor Harness Assembly
547	Figure 7	F-199	No Paper Sensor and Regi/NO Sensor Harness Assembly
548	Figure 7	F-200	PH Clutch Assembly and Feed Clutch Harness Assembly
570	Figure 1	I-113	MCU Board and MCU-MOT-C Harness Assembly
571	Figure 2	G-122	Main Drive Assembly and MCU-MOT-C Harness Assembly
572	Figure 2	H-122	Main Drive Assembly and Motor Harness Assembly
573	Figure 2	H-122	Main Drive Assembly and MCU-MOT-C Harness Assembly
574	Figure 2	H-122	Main Drive Assembly and MOT Harness Assembly
800	Figure 1	J-114	MCU Board and OPF Harness Assembly
801	Figure 7	H-200	OPF 2C Harness Assembly and OPF Harness Assembly
802	Figure 5	J-172	550 OPF Board and OPF 2C Harness Assembly
803	Figure 5	G-172	550 OPF Board and Feeder Motor Harness Assemby
804	Figure 5	E-168	550 OPF Drive Motor and Feeder Motor Harness Assembly
805	Figure 5	G-171	550 OPF Board and Feed Harness Assembly
806	Figure 5	E-167	OPT Feed Clutch and Feed Harness Assembly
807	Figure 5	G-166	OPT Feeder No Paper Sensor and Feed Harness Assembly
808	Figure 5	G-172	550 OPF Board and Turn Harness Assembly
809	Figure 5	D-167	OPT Takeaway Clutch and Turn Harness Assembly
810	Figure 5	D-167	OPT Paper Path Sensor and Turn Harness Assembly
811	Figure 5	I-172	550 OPF Board and Size Harness Assembly
812	Figure 5	I-167	550 OPF Size Switch Assembly and Size Harness Assembly
813	Figure 5	J-171	550 OPF Board and LED Harness Assembly
814	Figure 5	K-167	LED Tray Assembly and LED Harness Assembly

Table 1 Plug / Jack Locations (MFP)

P/J	Map	Coordinates	Connection
815	Figure 5	I-172	550 OPF Board and Feeder Drawer Harness Assembly
816	Figure 5	H-168	H/A Feeder Drawer and Feeder Drawer Harness Assembly
1001	Figure 1	D-112	HVPS Board and MCU-HVPS-C Harness Assembly
1315	Figure 1	A-103	MFP ESS Board and USB 3.0 Device
1337	Figure 1	C-102	MFP ESS Board and Front USB Harness Assembly
1344	Figure 1	A-102	MFP ESS Board and Wireless Module
1349	Figure 1	B-103	MFP ESS Board and EMMC Board
1350	Figure 1	G-108	FAX Board and FAX Harness Assembly
1352	Figure 1	C-102	MFP ESS Board and UI Harness
1360	Figure 1	C-105	MFP ESS Board and LPH Color (Y) Head Assembly
1361	Figure 1	C-105	MFP ESS Board and LPH Color (M) Head Assembly
1362	Figure 1	C-104	MFP ESS Board and LPH Color (C) Head Assembly
1363	Figure 1	C-105	MFP ESS Board and LPH Color (K) Head Assembly
1370	Figure 1	B-102	MFP ESS Board and IIT Assembly
1371	Figure 1	B-102	MFP ESS Board and DADF Assembly
1372	Figure 1	D-102	MFPESS Board and IIT Assembly
1374	Figure 1	C-102	MFP ESS Board and IIT Assembly
1377	Figure 1	C-102	MFP ESS Board and DADF Assembly
MJ1	Figure 1	F-108	Network Cable and FAX Board
MJ2	Figure 1	F-108	Network Cable and FAX Board
T601	Figure 1	D-113	HVPS Board and Trans Supply Harness Assembly

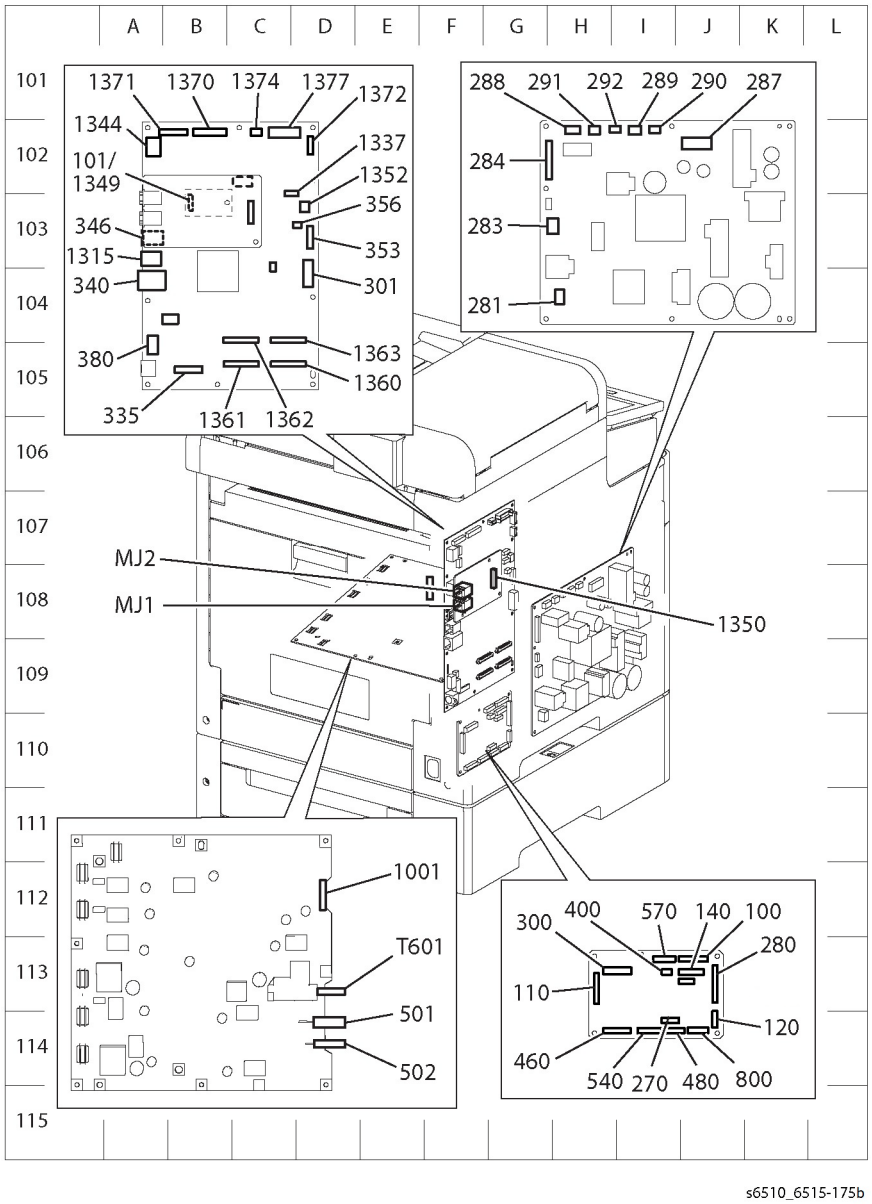

Figure 1 MFP P/J Locator Map 1

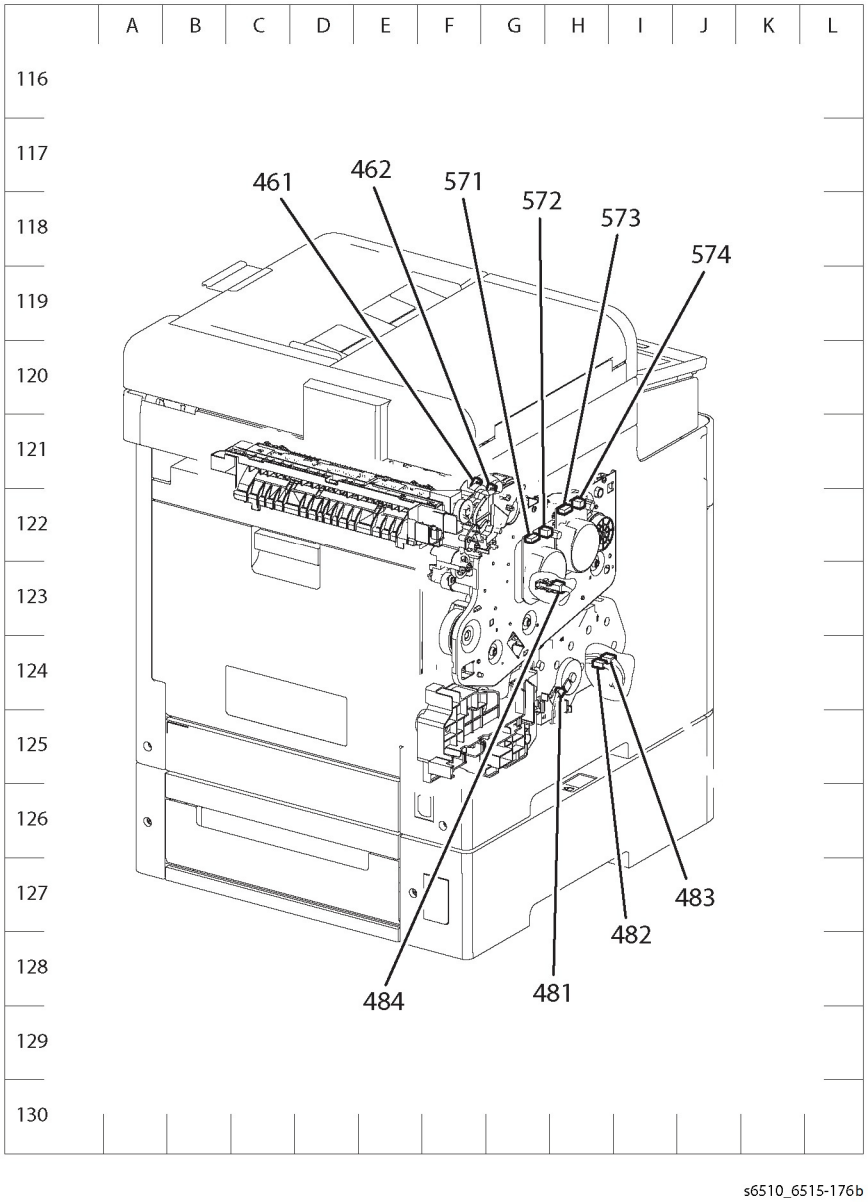

Figure 2 MFP P/J Locator Map 2

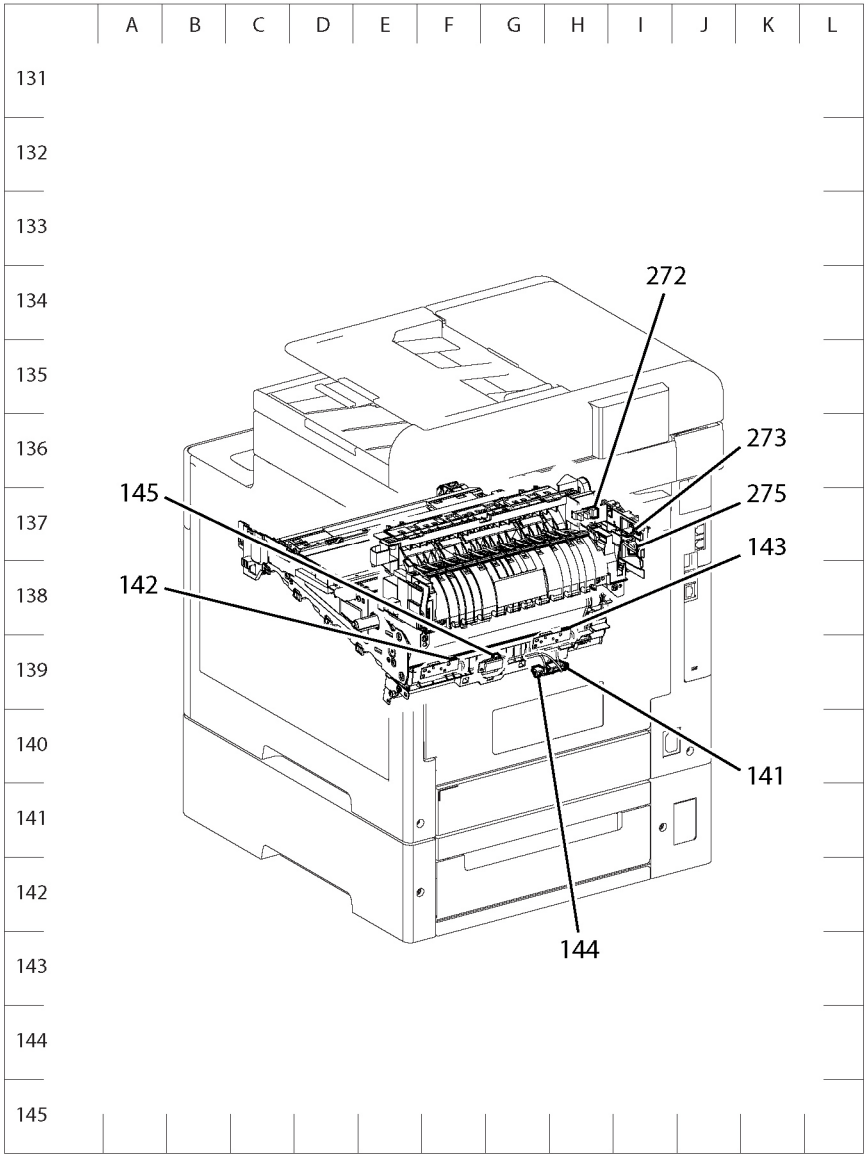

s6510_6515-177

Figure 3 MFP P/J Locator Map 3

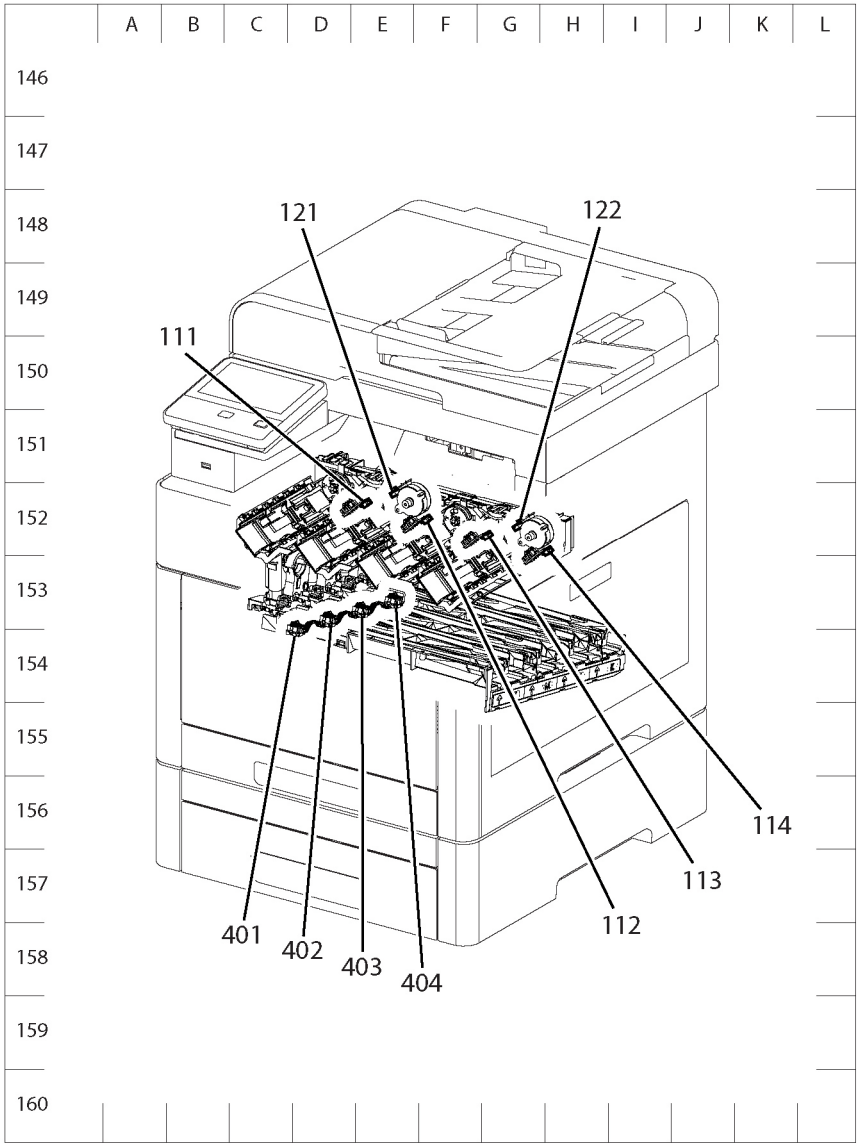

s6510_6515-178

Figure 4 MFP P/J Locator Map 4

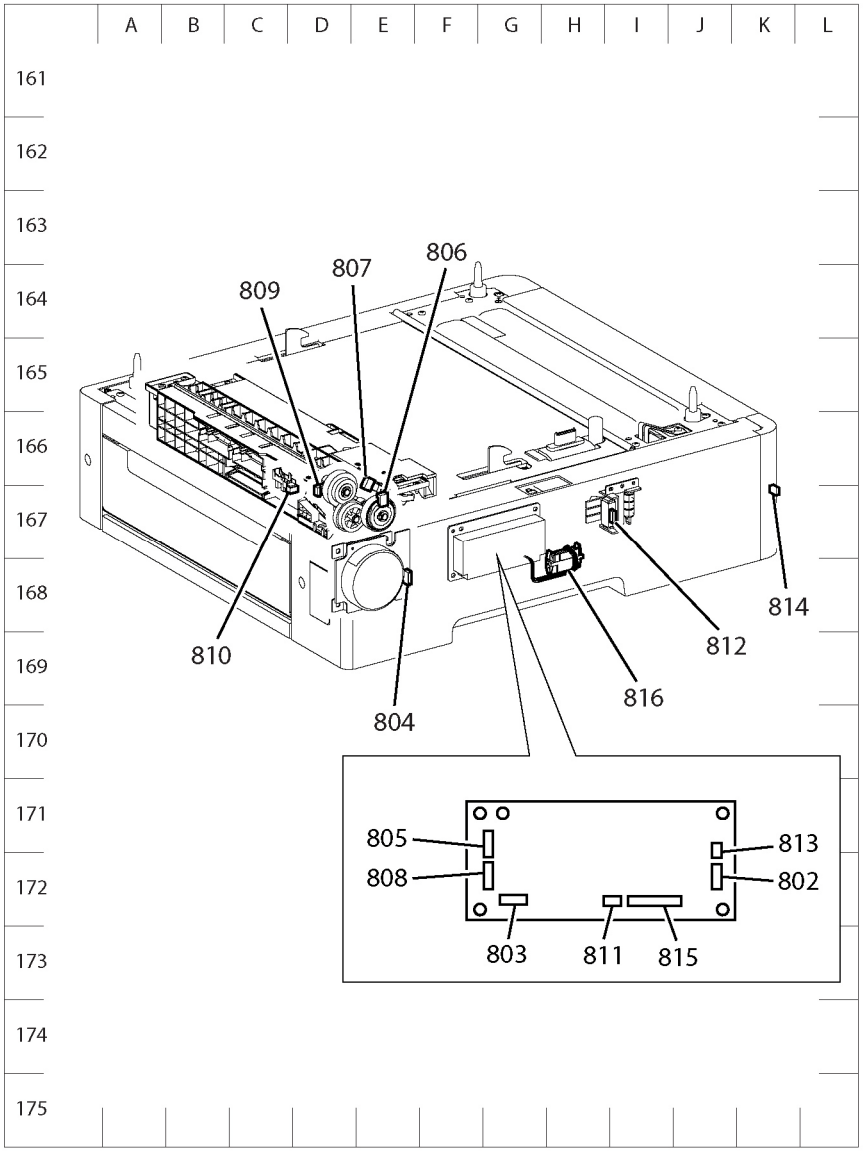

s6510_6515-179

Figure 5 MFP P/J Locator Map 5

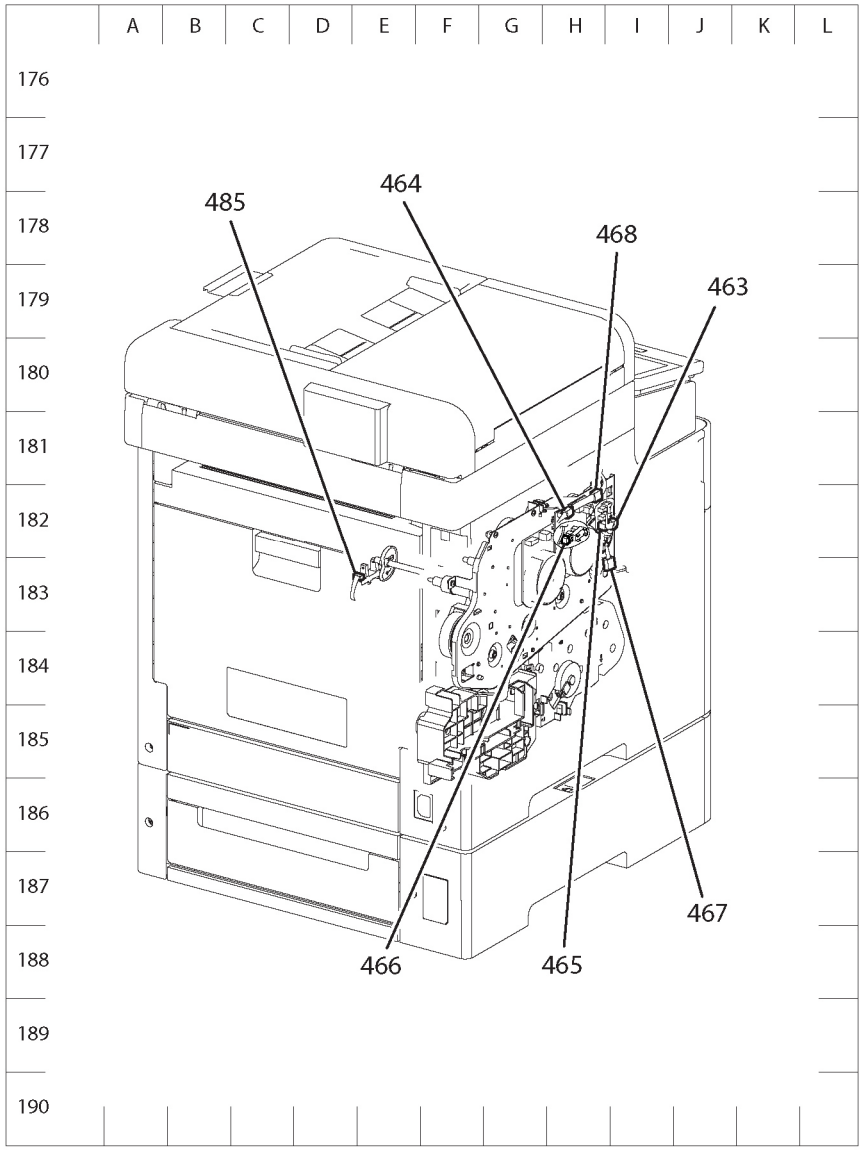

s6510_6515-180

Figure 6 MFP P/J Locator Map 6

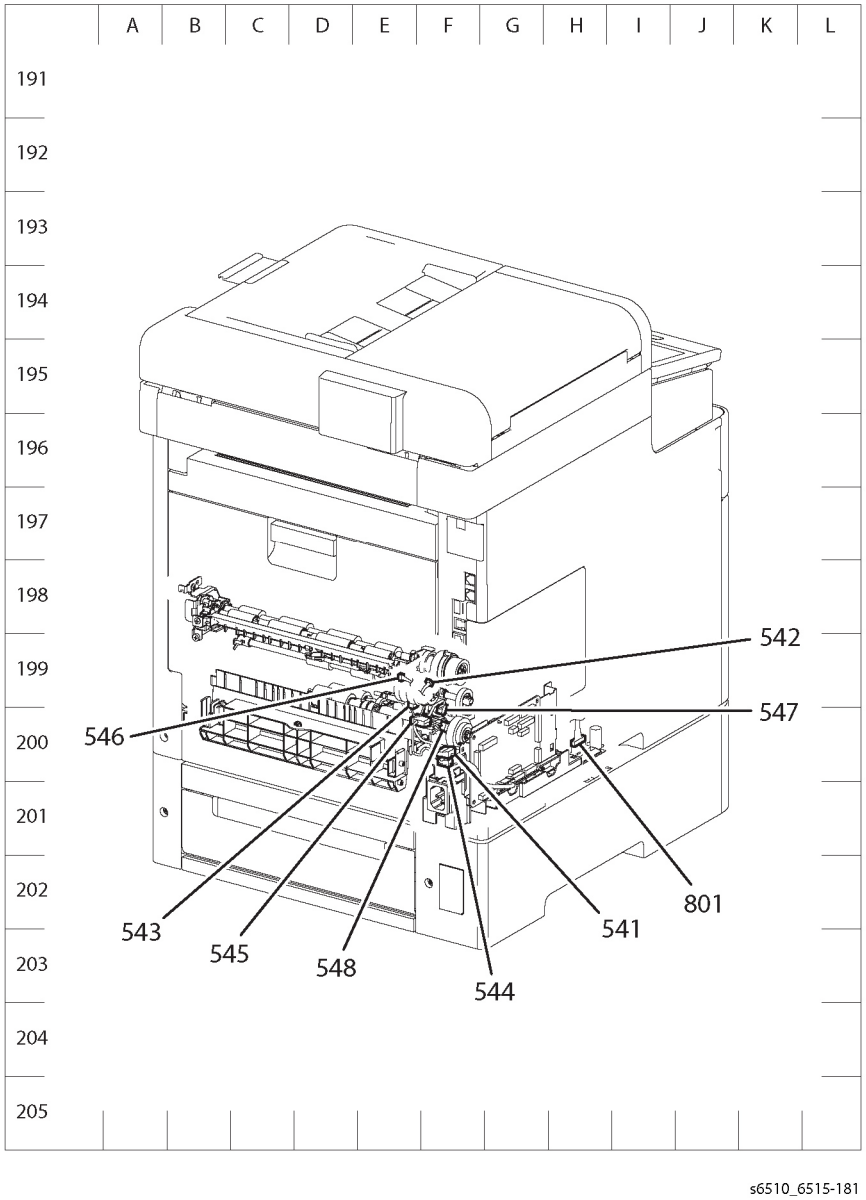

Figure 7 MFP P/J Locator Map 7

SFP Plug / Jack Location List

The P/J Locator diagrams show the location of primary connections within the SFP. Use these illustrations to locate connections called out in the procedures presented in Sections 2, 4, and 6. Connectors designated “CN” are listed at the end of the P/J connectors.

Harness connections appear in sections System Wiring Diagrams and Subsystem Wiring Diagrams.

How to find a P/J location:

1. Locate the P/J connector designator in the first column of Table 1.
2. With this information, refer to the Map column for the figure number.
3. Use the coordinates to find the P/J connector designator’s location on the map.

Table 1

100	Figure 1	J-113	MCU Board and MCU-HVPS-C Harness Assembly
101	Figure 1	B-103	SFP ESS Board and EMMC Board
110	Figure 1	H-113	MCU Board and Toner CRUM Harness Assembly
111	Figure 4	E-152	Toner CRUM Connector Assembly and Toner CRUM Harness Assembly
112	Figure 4	F-152	Toner CRUM Connector Assembly and Toner CRUM Harness Assembly
113	Figure 4	G-152	Toner CRUM Connector Assembly and Toner CRUM Harness Assembly
114	Figure 4	H-152	Toner CRUM Connector Assembly and Toner CRUM Harness Assembly
120	Figure 1	J-114	MCU Board and Dispenser Harness Assembly
121	Figure 4	E-152	Dispenser Drive Assembly and Dispenser Harness Assembly
122	Figure 4	G-152	Dispenser Drive Assembly and Dispenser Harness Assembly
140	Figure 1	J-113	MCU Board and Humidity RAD Harness Assembly
141	Figure 3	H-139	CTD Harness Assembly and Humidity RAD Harness Assembly
142	Figure 3	F-139	R-RAD Low Sensor and CTD Harness Assembly
143	Figure 3	H-139	R-RAD Sensor and CTD Harness Assembly
144	Figure 3	G-139	Humidity Harness Assembly and Humidity RAD Harness Assembly
145	Figure 3	G-139	Humidity & Temperature Sensor and Humidity Harness Assembly
270	Figure 1	I-114	MCU Board and DC Fuser Harness
272	Figure 3	H-137	Exit Sensor and DC Fuser Harness
273	Figure 3	I-137	Fuser Assembly and DC Fuser Harness
275	Figure 3	I-137	Fuser Assembly and AC Fuser Harness
280	Figure 1	J-113	MCU Board and MCU LV Harness Assembly

Table 1

281	Figure 1	H-104	LVPS Board and Inlet Harness Assembly
283	Figure 1	H-103	LVPS Board and AC Fuser Harness
284	Figure 1	H-102	LVPS Board and MCU LV Harness Assembly
287	Figure 1	K-102	LVPS Board and ESS-PWR-C Harness Assembly
288	Figure 1	H-102	LVPS Board and MOT Harness Assembly
289	Figure 1	I-102	LVPS Board and Main Fan
290	Figure 1	I-102	None
291	Figure 1	H-102	LVPS Board and Side IL Harness Assembly
292	Figure 1	I-102	LVPS Board and Rear IL Harness Assembly
300	Figure 1	I-113	MCU Board and MCU ESS FFC
301	Figure 1	D-104	SFP ESS Board and ESS-PWR-C Harness Assembly
306	Figure 1	C-102	SFP ESS Board and UI Harness
335	Figure 1	B-105	SFP ESS Board and MCU ESS FFC
340	Figure 1	A-103	SFP ESS Board and Ethernet
380	Figure 1	A-105	No connection
400	Figure 1	I-113	MCU Board and Deve/Xero C Harness Assembly
401	Figure 4	D-154	Deve/Xero CRUM Y and Deve/Xero C Harness Assembly
402	Figure 4	D-153	Deve/Xero CRUM M and Deve/Xero C Harness Assembly
403	Figure 4	E-153	Deve/Xero CRUM C and Deve/Xero C Harness Assembly
404	Figure 4	E-153	Deve/Xero CRUM K and Deve/Xero C Harness Assembly
460	Figure 1	I-114	MCU Board and Deve CL Harness Assembly
461	Figure 2	F-121	Main Exit Drive Assembly and Deve CL Harness Assembly
462	Figure 2	G-121	Main Exit Drive Assembly and Deve CL Harness Assembly
463	Figure 6	I-182	Main Drive Assembly and Deve CL Harness Assembly
464	Figure 6	H-182	Main Drive Assembly and Deve CL Harness Assembly
465	Figure 6	H-182	Main Drive Assembly and Deve-Xero-C Sensor Harness Assembly
466	Figure 6	H-182	K Mode Sensor and K-SNR-C Harness Assembly
467	Figure 6	H-182	Deve/Xero-C Sensor Harness Assembly and Deve CL Harness Assembly
468	Figure 6	H-182	K-SNR-C Harness Assembly and Deve CL Harness Assembly
480	Figure 1	I-114	MCU Board and MSI CL Harness Assembly
481	Figure 2	H-124	MSI Drive Assembly and MSI CL Harness Assembly
482	Figure 2	H-124	MSI Feed Solenoid and MSI CL Harness Assembly
483	Figure 2	H-124	MSI No Paper Harness Assembly and MSI CL Harness Assembly
484	Figure 2	H-123	MSI No Paper Sensor and MSI No Paper Harness Assembly
485	Figure 6	E-183	Toner Full Sensor and MSI CL Harness Assembly
501	Figure 1	D-114	HVPS Board and K 1st Supply Harness Assembly

Table 1

502	Figure 1	D-114	HVPS Board and YMC 1st Supply Harness Assembly
540	Figure 1	I-114	MCU Board and Regi-C Harness Assembly
541	Figure 7	F-200	Regi/Dup-C CLT Harness Assembly and Regi-C Harness Assembly
542	Figure 7	F-199	Regi Clutch Assembly and Regi/Dup-C CLT Harness Assembly
543	Figure 7	E-199	Regi D Bracket Assembly and Regi/Dup-C CLT Harness Assembly
544	Figure 7	F-200	Feed Clutch Harness Assembly and Regi-C Harness Assembly
545	Figure 7	E-200	Regi/NO Sensor Harness Assembly and Regi-C Harness Assembly
546	Figure 7	E-199	Regi Sensor and Regi/NO Sensor Harness Assembly
547	Figure 7	F-199	No Paper Sensor and Regi/NO Sensor Harness Assembly
548	Figure 7	F-200	PH Clutch Assembly and Feed Clutch Harness Assembly
570	Figure 1	I-113	MCU Board and MCU-MOT-C Harness Assembly
571	Figure 2	H-122	Main Drive Assembly and MCU-MOT-C Harness Assembly
572	Figure 2	H-122	Main Drive Assembly and Motor Harness Assembly
573	Figure 2	G-122	Main Drive Assembly and MCU-MOT-C Harness Assembly
574	Figure 2	H-122	Main Drive Assembly and MOT Harness Assembly
800	Figure 1	J-114	MCU Board and OPF Harness Assembly
801	Figure 7	H-200	OPF 2C Harness Assembly and OPF Harness Assembly
802	Figure 5	J-172	550 OPF Board and OPF 2C Harness Assembly
803	Figure 5	G-172	550 OPF Board and Feeder Motor Harness Assembly
804	Figure 5	E-168	550 OPF Drive Motor and Feeder Motor Harness Assembly
805	Figure 5	G-171	550 OPF Board and Feed Harness Assembly
806	Figure 5	E-167	OPT Feed Clutch and Feed Harness Assembly
807	Figure 5	E-166	OPT Feeder No Paper Sensor and Feed Harness Assembly
808	Figure 5	G-172	550 OPF Board and Turn Harness Assembly
809	Figure 5	D-167	OPT Takeaway Clutch and Turn Harness Assembly
810	Figure 5	D-167	OPT Paper Path Sensor and Turn Harness Assembly
811	Figure 5	I-172	550 OPF Board and Size Harness Assembly
812	Figure 5	I-167	550 OPF Size Switch Assembly and Size Harness Assembly
813	Figure 5	J-171	550 OPF Board and LED Harness Assembly
814	Figure 5	K-167	LED Tray Assembly and LED Harness Assembly
815	Figure 5	I-172	550 OPF Board and Feeder Drawer Harness Assembly
816	Figure 5	H-168	H/A Feeder Drawer and Feeder Drawer Harness Assembly
1001	Figure 1	D-112	HVPS Board and MCU-HVPS-C Harness Assembly

Table 1

1315	Figure 1	A-103	SFP ESS Board and USB 3.0 Device
1344	Figure 1	A-102	SFP ESS Board and Wireless Module
1349	Figure 1	B-103	SFP ESS Board and EMMC Board
1360	Figure 1	C-105	SFP ESS Board and LPH Color (Y) Head Assembly
1361	Figure 1	C-105	SFP ESS Board and LPH Color (M) Head Assembly
1362	Figure 1	C-104	SFP ESS Board and LPH Color (C) Head Assembly
1363	Figure 1	C-105	SFP ESS Board and LPH Color (K) Head Assembly
T601	Figure 1	D-113	HVPS Board and Trans Supply Harness Assembly

Table 2 Plug / Jack Locations (SFP)

P/J	Map	Coordinates	Connection
100	Figure 1	J-113	MCU Board and MCU-HVPS-C Harness Assembly
101	Figure 1	B-103	SFP ESS Board and EMMC Board
110	Figure 1	H-113	MCU Board and Toner CRUM Harness Assembly
111	Figure 4	E-152	Toner CRUM Connector Assembly and Toner CRUM Harness Assembly
112	Figure 4	F-152	Toner CRUM Connector Assembly and Toner CRUM Harness Assembly
113	Figure 4	G-152	Toner CRUM Connector Assembly and Toner CRUM Harness Assembly
114	Figure 4	H-152	Toner CRUM Connector Assembly and Toner CRUM Harness Assembly
120	Figure 1	J-114	MCU Board and Dispenser Harness Assembly
121	Figure 4	E-152	Dispenser Drive Assembly and Dispenser Harness Assembly
122	Figure 4	G-152	Dispenser Drive Assembly and Dispenser Harness Assembly
140	Figure 1	J-113	MCU Board and Humidity RAD Harness Assembly
141	Figure 3	H-139	CTD Harness Assembly and Humidity RAD Harness Assembly
142	Figure 3	F-139	R-RAD Low Sensor and CTD Harness Assembly
143	Figure 3	H-139	R-RAD Sensor and CTD Harness Assembly
144	Figure 3	G-139	Humidity Harness Assembly and Humidity RAD Harness Assembly
145	Figure 3	G-139	Humidity & Temperature Sensor and Humidity Harness Assembly
270	Figure 1	I-114	MCU Board and DC Fuser Harness
272	Figure 3	H-137	Exit Sensor and DC Fuser Harness
273	Figure 3	I-137	Fuser Assembly and DC Fuser Harness
275	Figure 3	I-137	Fuser Assembly and AC Fuser Harness
280	Figure 1	J-113	MCU Board and MCU LV Harness Assembly
281	Figure 1	H-104	LVPS Board and Inlet Harness Assembly

Table 2 Plug / Jack Locations (SFP)

P/J	Map	Coordinates	Connection
283	Figure 1	H-103	LVPS Board and AC Fuser Harness
284	Figure 1	H-102	LVPS Board and MCU LV Harness Assembly
287	Figure 1	K-102	LVPS Board and ESS-PWR-C Harness Assembly
288	Figure 1	H-102	LVPS Board and MOT Harness Assembly
289	Figure 1	I-102	LVPS Board and Main Fan
290	Figure 1	I-102	None
291	Figure 1	H-102	LVPS Board and Side IL Harness Assembly
292	Figure 1	I-102	LVPS Board and Rear IL Harness Assembly
300	Figure 1	I-113	MCU Board and MCU ESS FFC
301	Figure 1	D-104	SFP ESS Board and ESS-PWR-C Harness Assembly
306	Figure 1	C-102	SFP ESS Board and UI Harness
335	Figure 1	B-105	SFP ESS Board and MCU ESS FFC
340	Figure 1	A-103	SFP ESS Board and Ethernet
380	Figure 1	A-105	No connection
400	Figure 1	I-113	MCU Board and Deve/Xero C Harness Assembly
401	Figure 4	D-154	Deve/Xero CRUM Y and Deve/Xero C Harness Assembly
402	Figure 4	D-153	Deve/Xero CRUM M and Deve/Xero C Harness Assembly
403	Figure 4	E-153	Deve/Xero CRUM C and Deve/Xero C Harness Assembly
404	Figure 4	E-153	Deve/Xero CRUM K and Deve/Xero C Harness Assembly
460	Figure 1	I-114	MCU Board and Deve CL Harness Assembly
461	Figure 2	F-121	Main Exit Drive Assembly and Deve CL Harness Assembly
462	Figure 2	G-121	Main Exit Drive Assembly and Deve CL Harness Assembly
463	Figure 6	I-182	Main Drive Assembly and Deve CL Harness Assembly
464	Figure 6	H-182	Main Drive Assembly and Deve CL Harness Assembly
465	Figure 6	H-182	Main Drive Assembly and Deve-Xero-C Sensor Harness Assembly
466	Figure 6	H-182	K Mode Sensor and K-SNR-C Harness Assembly
467	Figure 6	H-182	Deve/Xero-C Sensor Harness Assembly and Deve CL Harness Assembly
468	Figure 6	H-182	K-SNR-C Harness Assembly and Deve CL Harness Assembly
480	Figure 1	I-114	MCU Board and MSI CL Harness Assembly
481	Figure 2	H-124	MSI Drive Assembly and MSI CL Harness Assembly
482	Figure 2	H-124	MSI Feed Solenoid and MSI CL Harness Assembly
483	Figure 2	H-124	MSI No Paper Harness Assembly and MSI CL Harness Assembly
484	Figure 2	H-123	MSI No Paper Sensor and MSI No Paper Harness Assembly
485	Figure 6	E-183	Toner Full Sensor and MSI CL Harness Assembly
501	Figure 1	D-114	HVPS Board and K 1st Supply Harness Assembly
502	Figure 1	D-114	HVPS Board and YMC 1st Supply Harness Assembly

Table 2 Plug / Jack Locations (SFP)

P/J	Map	Coordinates	Connection
540	Figure 1	I-114	MCU Board and Regi-C Harness Assembly
541	Figure 7	F-200	Regi/Dup-C CLT Harness Assembly and Regi-C Harness Assembly
542	Figure 7	F-199	Regi Clutch Assembly and Regi/Dup-C CLT Harness Assembly
543	Figure 7	E-199	Regi D Bracket Assembly and Regi/Dup-C CLT Harness Assembly
544	Figure 7	F-200	Feed Clutch Harness Assembly and Regi-C Harness Assembly
545	Figure 7	E-200	Regi/NO Sensor Harness Assembly and Regi-C Harness Assembly
546	Figure 7	E-199	Regi Sensor and Regi/NO Sensor Harness Assembly
547	Figure 7	F-199	No Paper Sensor and Regi/NO Sensor Harness Assembly
548	Figure 7	F-200	PH Clutch Assembly and Feed Clutch Harness Assembly
570	Figure 1	I-113	MCU Board and MCU-MOT-C Harness Assembly
571	Figure 2	H-122	Main Drive Assembly and MCU-MOT-C Harness Assembly
572	Figure 2	H-122	Main Drive Assembly and Motor Harness Assembly
573	Figure 2	G-122	Main Drive Assembly and MCU-MOT-C Harness Assembly
574	Figure 2	H-122	Main Drive Assembly and MOT Harness Assembly
800	Figure 1	J-114	MCU Board and OPF Harness Assembly
801	Figure 7	H-200	OPF 2C Harness Assembly and OPF Harness Assembly
802	Figure 5	J-172	550 OPF Board and OPF 2C Harness Assembly
803	Figure 5	G-172	550 OPF Board and Feeder Motor Harness Assemby
804	Figure 5	E-168	550 OPF Drive Motor and Feeder Motor Harness Assembly
805	Figure 5	G-171	550 OPF Board and Feed Harness Assembly
806	Figure 5	E-167	OPT Feed Clutch and Feed Harness Assembly
807	Figure 5	E-166	OPT Feeder No Paper Sensor and Feed Harness Assembly
808	Figure 5	G-172	550 OPF Board and Turn Harness Assembly
809	Figure 5	D-167	OPT Takeaway Clutch and Turn Harness Assembly
810	Figure 5	D-167	OPT Paper Path Sensor and Turn Harness Assembly
811	Figure 5	I-172	550 OPF Board and Size Harness Assembly
812	Figure 5	I-167	550 OPF Size Switch Assembly and Size Harness Assembly
813	Figure 5	J-171	550 OPF Board and LED Harness Assembly
814	Figure 5	K-167	LED Tray Assembly and LED Harness Assembly
815	Figure 5	I-172	550 OPF Board and Feeder Drawer Harness Assembly
816	Figure 5	H-168	H/A Feeder Drawer and Feeder Drawer Harness Assembly
1001	Figure 1	D-112	HVPS Board and MCU-HVPS-C Harness Assembly
1315	Figure 1	A-103	SFP ESS Board and USB 3.0 Device

Table 2 Plug / Jack Locations (SFP)

P/J	Map	Coordinates	Connection
1344	Figure 1	A-102	SFP ESS Board and Wireless Module
1349	Figure 1	B-103	SFP ESS Board and EMMC Board
1360	Figure 1	C-105	SFP ESS Board and LPH Color (Y) Head Assembly
1361	Figure 1	C-105	SFP ESS Board and LPH Color (M) Head Assembly
1362	Figure 1	C-104	SFP ESS Board and LPH Color (C) Head Assembly
1363	Figure 1	C-105	SFP ESS Board and LPH Color (K) Head Assembly
T601	Figure 1	D-113	HVPS Board and Trans Supply Harness Assembly

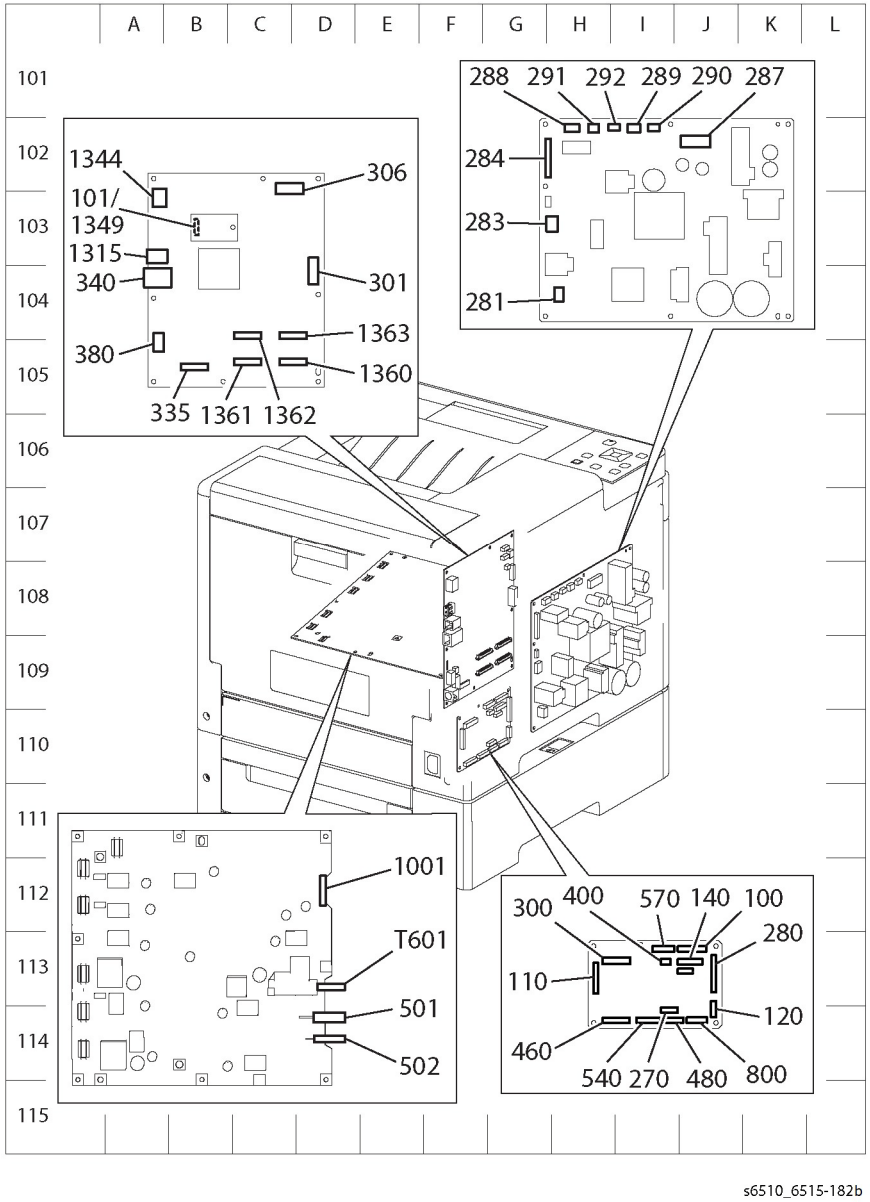

Figure 1 SFP P/J Locator Map 1

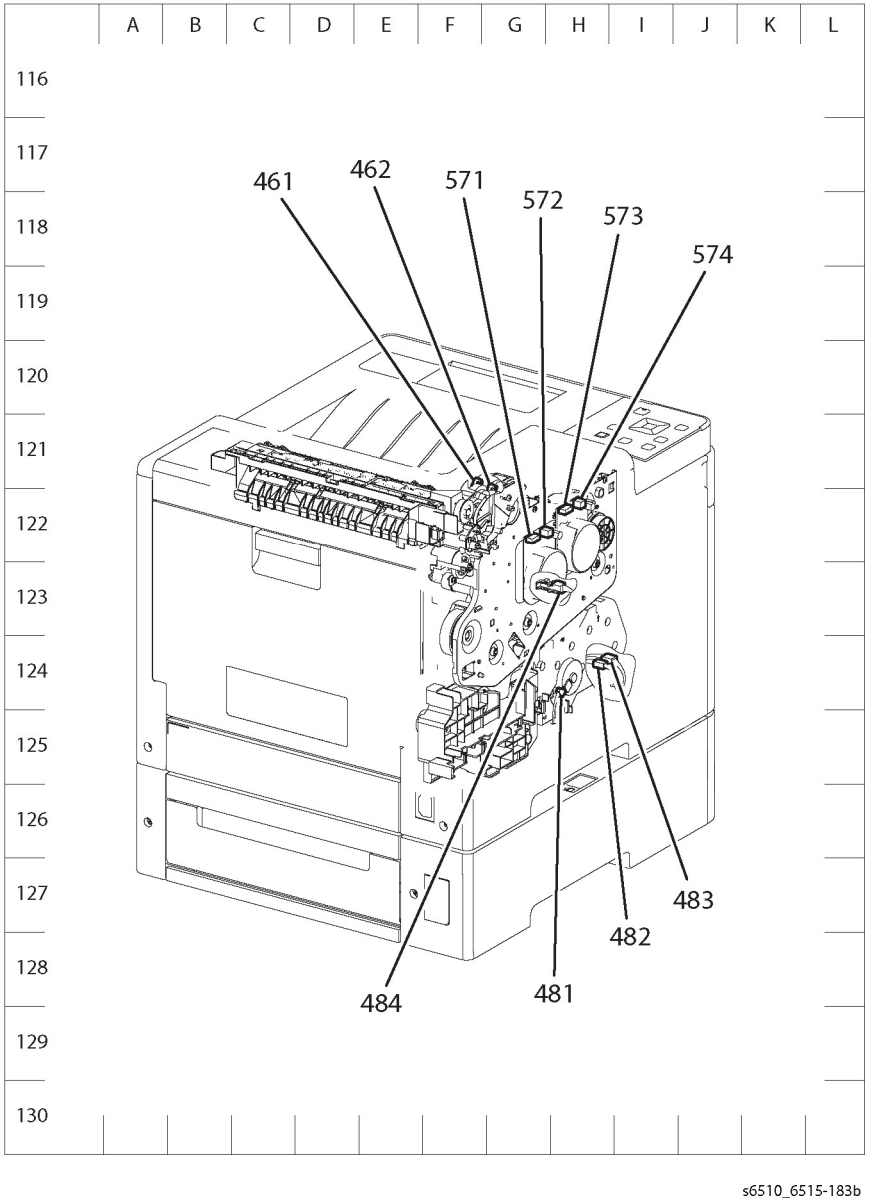

Figure 2 SFP P/J Locator Map 2

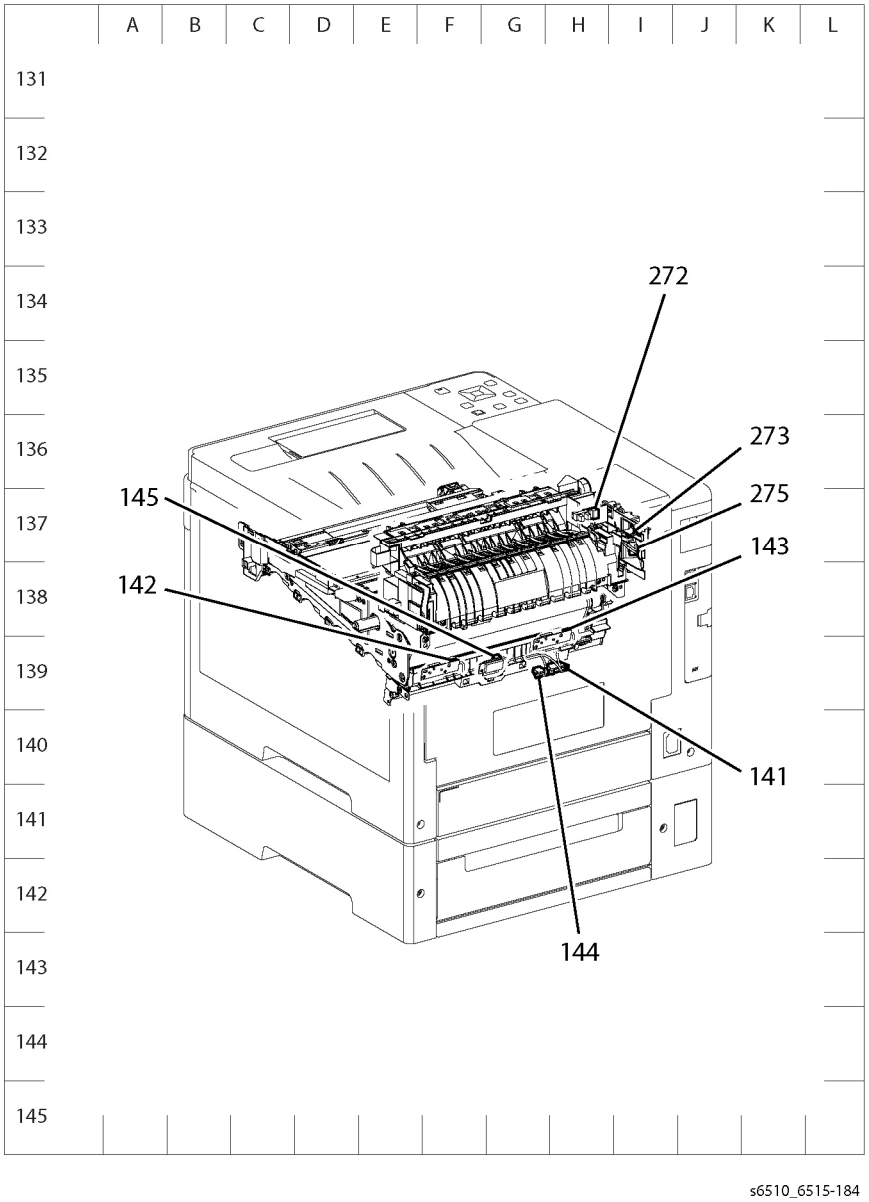

Figure 3 SFP P/J Locator Map 3

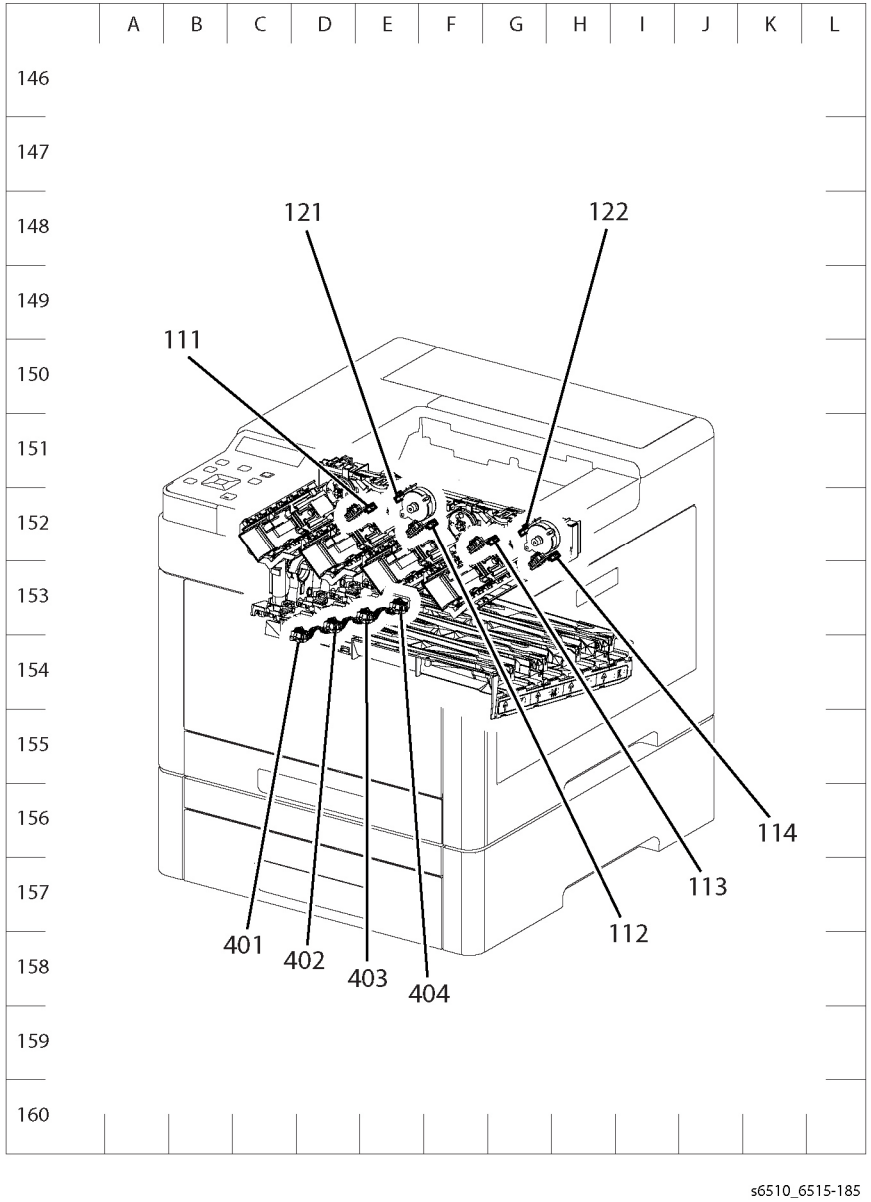

Figure 4 SFP P/J Locator Map 4

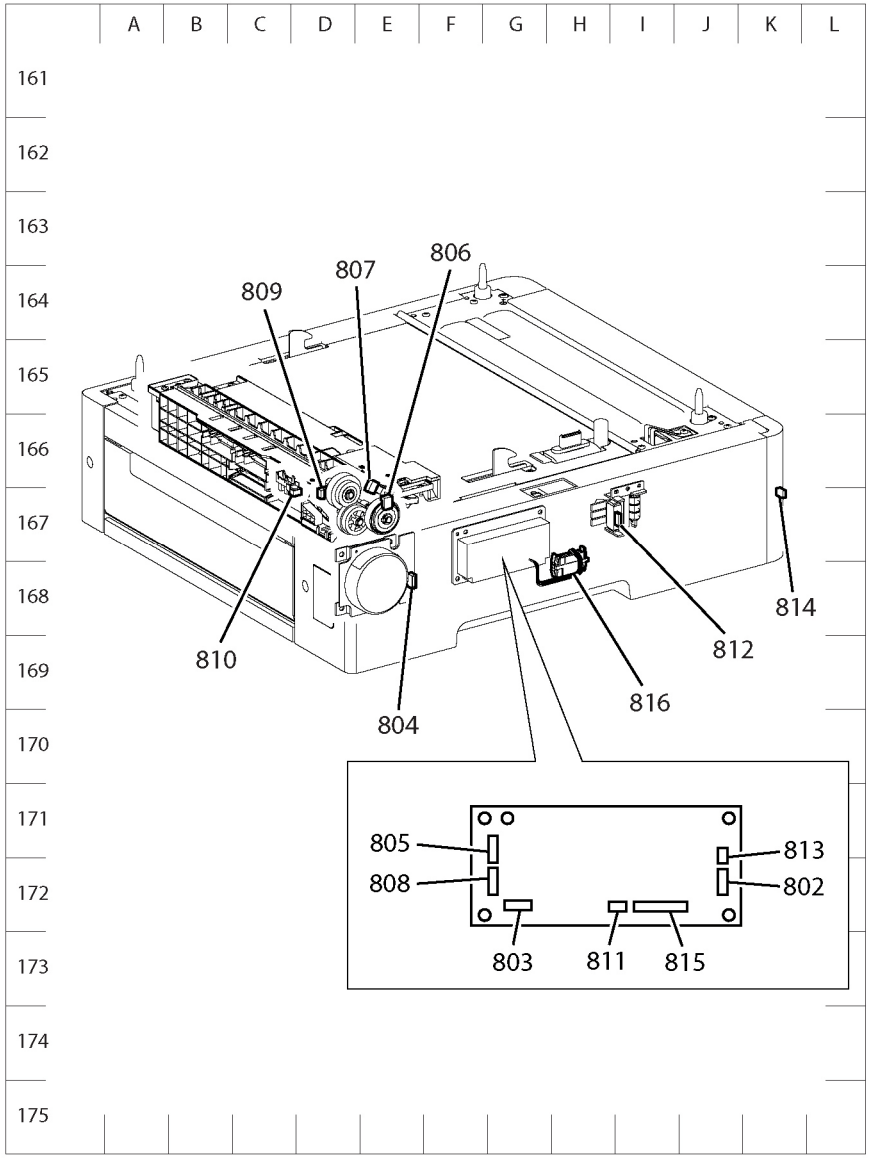

s6510_6515-186

Figure 5 SFP P/J Locator Map 5

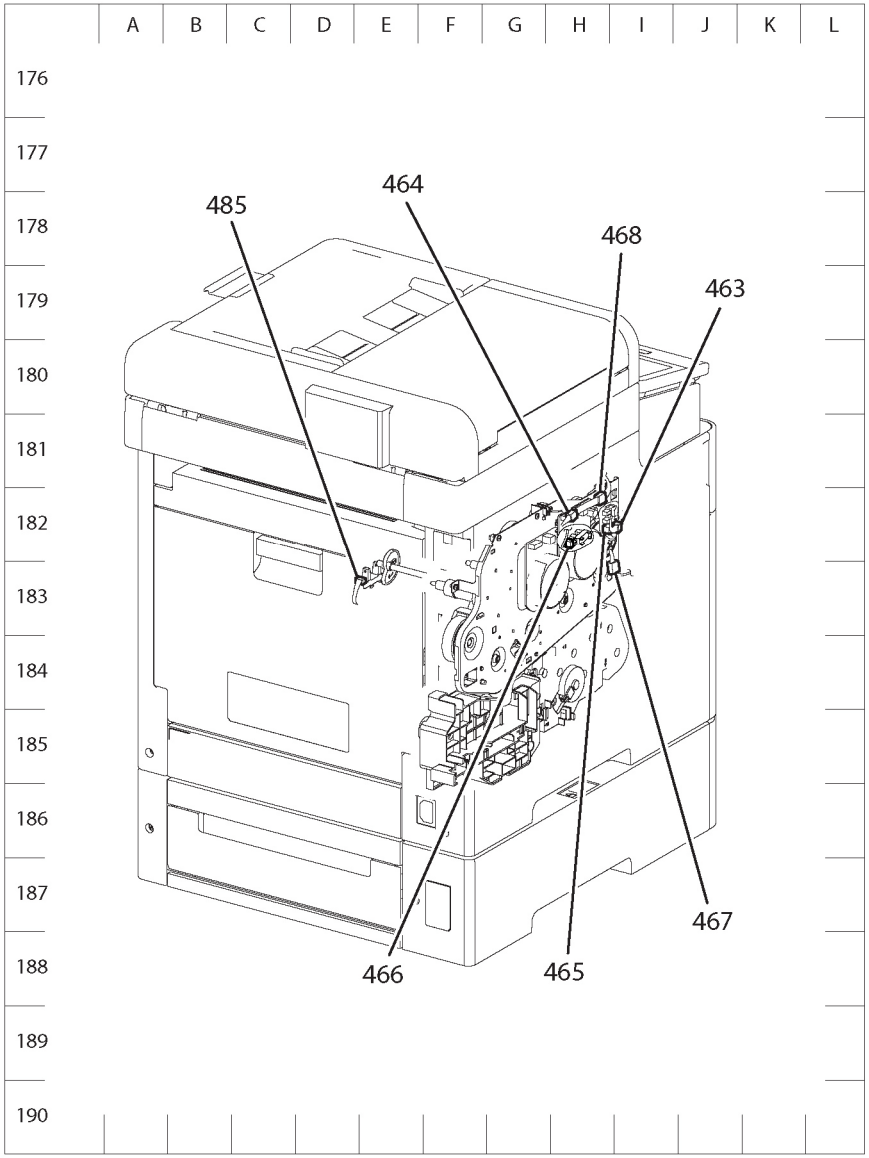

s6510_6515-187

Figure 6 SFP P/J Locator Map 6

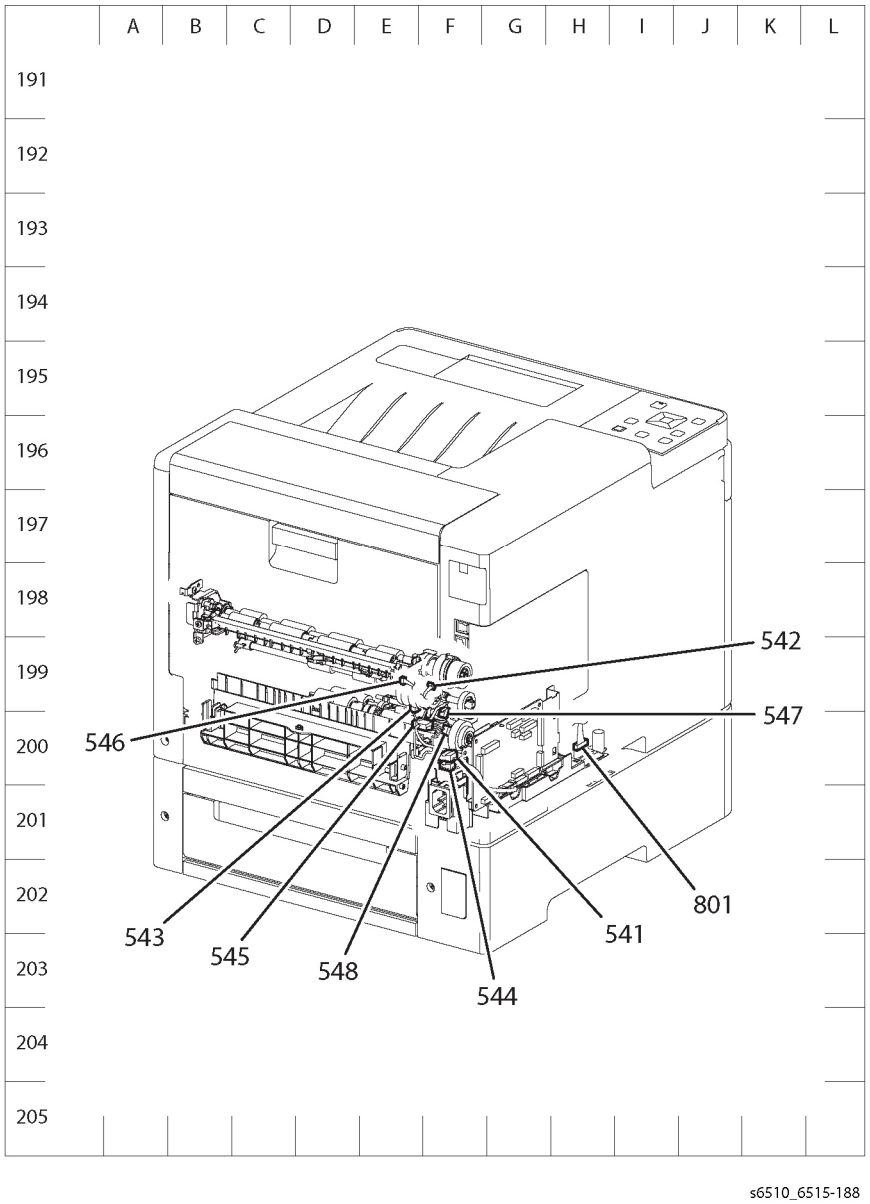

Figure 7 SFP P/J Locator Map 7

System Wiring Diagram Symbols

Table 1 shows the symbols used in the system wiring diagrams.

Table 1

Fuser PL X.Y.Z Subassembly 1	Represents the parts. PL X.Y.Z implies the item “Z” of plate (PL) “X.Y” in Parts List.
Heater Subassembly 2	Represents functional parts attached with functional parts name.
Control Subassembly 3	Represents the control and its outline in the Board.
Safety Interlock Switch	Indicates a Safety Interlock Switch.
	Indicates a frame ground.

System Wiring Diagrams

Refer to Table 1 for a list of the wiring diagrams for the major printer systems and the connection details shown in each diagram. The wiring diagrams follow Table 1.

Table 1

Figure 1	LVPS power; MCU signals to motors and sensors
Figure 2	MCU / ESS signals to clutches, solenoids, sensors, LPH (Y,M,C,K)
Figure 3	550 Option Feeder signals
Figure 4	MFP ESS signals to Console, FAX, Speaker, Wireless, EMMC SFP ESS signals to Console, Wireless, EMMC
Figure 5	ESS signals to IIT and DADF

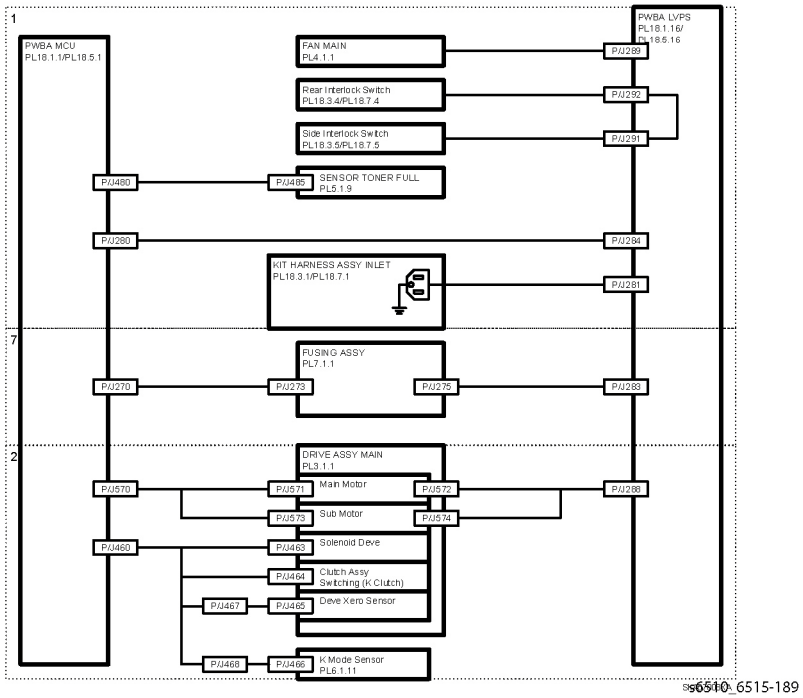

Figure 1 System Wiring Diagram 1

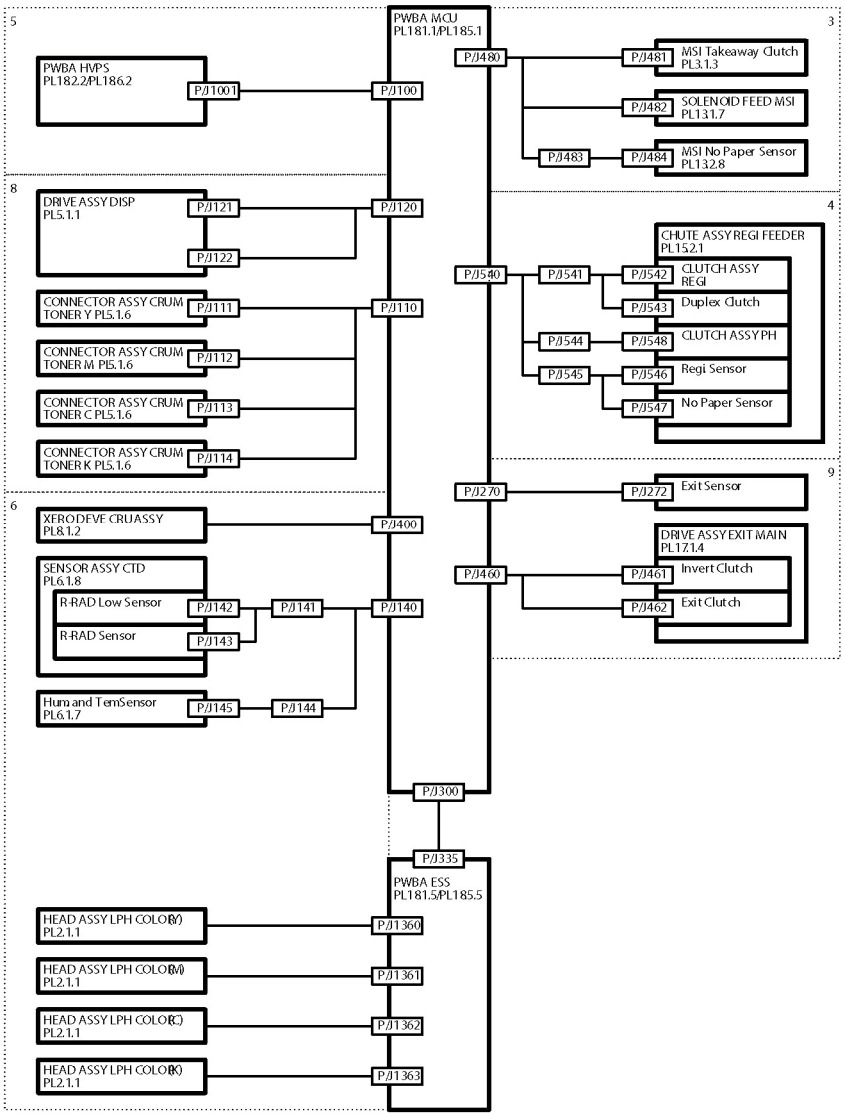

s6510_6515-190b

Figure 2 System Wiring Diagram 2

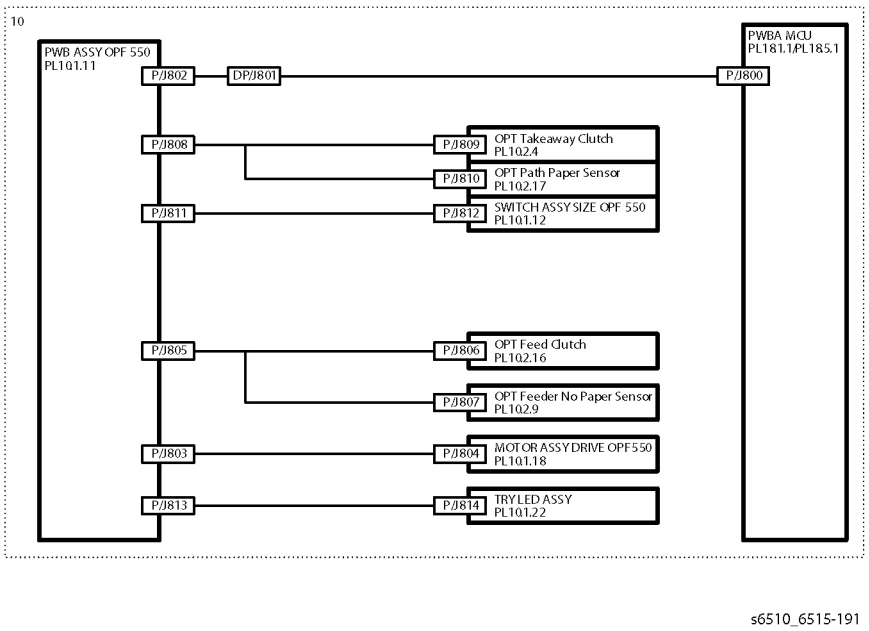

s6510_6515-191

Figure 3 System Wiring Diagram 3

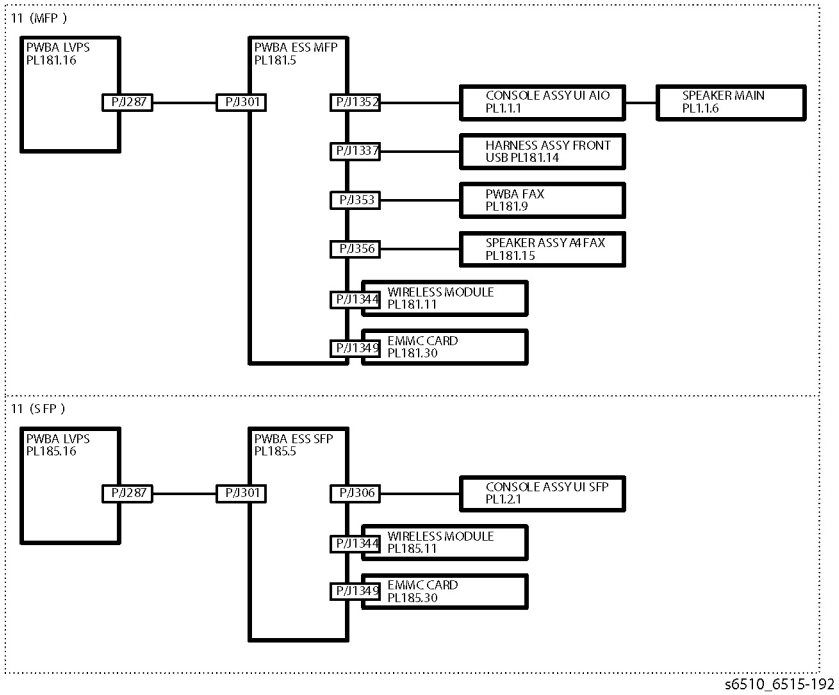

Figure 4 System Wiring Diagram 4

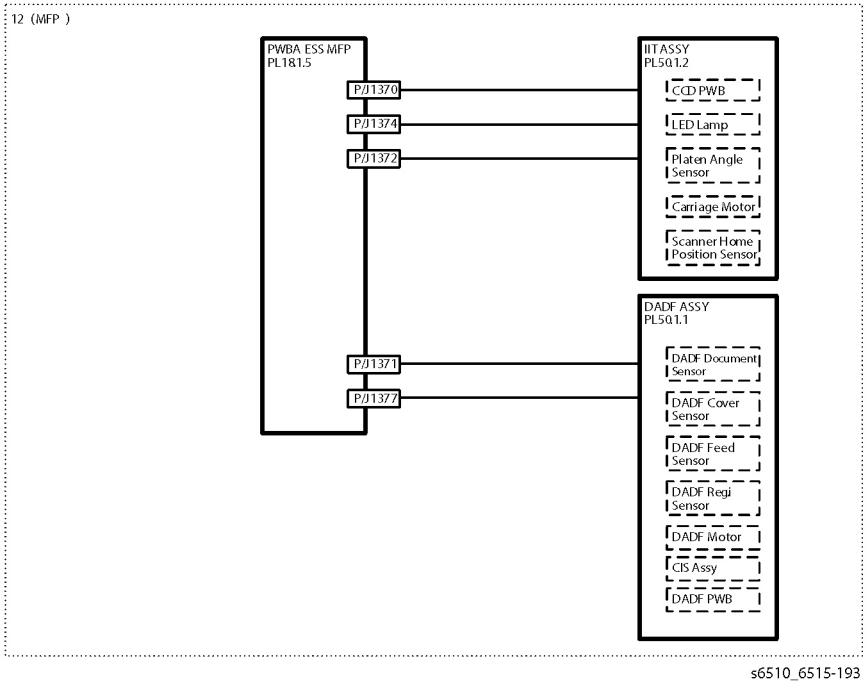

Figure 5 System Wiring Diagram 5

Subsystem Wiring Diagram Symbols

Table 1 shows the symbols used in the wiring diagrams for the printer subsystems.

Table 1

	Denotes a Plug.
	Denotes a Jack.
P/Jxx YY	Denotes Pin yy and Jack yy of the connector Pxx and Jxx.
JPxxx	Denotes a Jumper Point (JPxxx/xxx). Each end of the Jumper connection has a numeric designation.
Fuser PL X.Y.Z	Denotes the parts. PL X.Y.Z implies the item “Z” of plate (PL) “X.Y” in Parts List.
Heater	Denotes functional parts attached with functional parts name.
Control	Denotes the control and its outline in the Board.
DEVE_A	Denotes a connection between parts with harness or wired, attached with signal name/contents.
CLUTCH ON(L)+24V	Denotes function, and logic value of the signal to operate the function (Low: L, High: H). The given voltage is for signal in high status. The arrow indicates the direction of signal.
EXIT SENSED(L)+3.3VDC	Denotes function, and logic value of the signal when the function operated (Low: L, High: H). The given voltage is for signal in high status. The arrow indicates direction of signal.
	Denotes a connection between wires.

Table 1

	Denotes a Clutch or Solenoid.
M	Denotes a Motor.
	Denotes a Photo Sensor.
	Denotes an LED.
	Denotes a Safety Interlock Switch.
	Denotes an On-Off Switch (single-pole, single-throw switch).
	Denotes an On-Off Switch (Temperature - normally closed).
	Denotes an NPN Photo-transistor.
I/L +24 VDC	Denotes DC voltage when the Interlock Switch in MCU Board turns On.
+5 VDC +3.3 VDC	Denotes DC voltage.
SG	Denotes signal ground.
AG	Denotes analog ground.
RTN	Denotes return.

Subsystem Wiring Diagrams

This section shows the wiring diagrams for the printer subsystems including the 550 option feeder tray.

Refer to Table 1 for a list of the wiring diagrams for the printer subsystems and the connection details shown in each diagram. The wiring diagrams follow Table 1. Each printer subsystem diagram has an associated table listing the names for the main signal lines.

Table 1 Subsystem Wiring Diagrams and Connection Details

Printer Subsystem	Diagram	Connection Details
Power	Figure 1 Table 2	Connections of AC Inlet Assembly with LVPS Board. Connections of LVPS Board with MCU Board. Connections of Rear Interlock Switch with LVPS Board. Connections of Side Interlock Switch with LVPS Board. Connections of MCU Board with Toner Full Sensor. Connections of Main Fan with LVPS Board.
Drive	Figure 2 Table 3	Connections of LVPS Board with Main Drive Assembly. Connections of MCU Board with Main Drive Assembly. Connections of MCU Board with Sub Motor. Connections of MCU Board with Main Motor. Connections of MCU Board with Solenoid Deve. Connections of MCU Board with Clutch Assembly Switching. Connections of MCU Board with Deve Xero Sensor. Connections of MCU Board with K Mode Sensor.
Bypass Tray (MSI)	Figure 3 Table 4	Connections of MCU Board with MSI Drive Assembly. Connections of MCU Board with MSI Feed Solenoid. Connections of MCU Board with MSI No Paper Sensor.
Paper Transport	Figure 4 Table 5	Connections of MCU Board with Regi Clutch Assembly. Connections of MCU Board with Duplex Clutch. Connections of MCU Board with PH Clutch Assembly. Connections of MCU Board with Regi Sensor. Connections of MCU Board with No Paper Sensor.
HVPS	Figure 5 Table 6	Connections of MCU Board with HVPS Board.
Xerographic	Figure 6 Table 7	Connections of MCU Board with Deve/Xero CRUM (Y/M/C/K). Connections of MCU Board with CTD Sensor Assembly. Connections of ESS Board with LPH Color Assembly (Y/M/C/K).
Fuser	Figure 7 Table 8	Connections of MCU Board with Fuser Assembly. Connections of Fuser Assembly with LVPS Board.
Developer	Figure 8 Table 9	Connections of MCU Board with Toner CRUM (Y/M/C/K). Connections of MCU Board with Toner Dispense Motor (Y/M). Connections of MCU Board with Toner Dispense Motor (C/K).
Exit	Figure 9 Table 10	Connections of MCU Board with Exit Sensor. Connections of MCU Board with Invert Clutch, Connections of MCU Board with Exit Clutch.

Table 1 Subsystem Wiring Diagrams and Connection Details

Printer Subsystem	Diagram	Connection Details
550 Option Feeder	Figure 10 Table 11	Connections of MCU Board with Option 550 Feeder Board. Connections of Option 550 Feeder Board with OPT Takeaway Clutch. Connections of Option 550 Feeder Board with OPT Path Paper Sensor. Connections of Option 550 Feeder Board with Option 550 Size Switch Assembly. Connections of Option 550 Feeder Board with LED Tray Assembly. Connections of Option 550 Feeder Board with OPT Feed Clutch. Connections of Option 550 Feeder Board with OPT Feeder No Paper Sensor. Connections of Option 550 Feeder Board with Option 550 Drive Motor Assembly.
Controller (MFP)	Figure 11	Connections of LVPS Board with MFP ESS Board. Connections of MFP ESS Board with UI Console Assembly. Connections of MFP ESS Board with Front USB Harness Assy. Connections of MFP ESS Board with FAX Board. Connections of MFP ESS Board with Wireless Module. Connections of MFP ESS Board with FAX SPeaker Assembly. Connections of MFP ESS Board with EMMC Board. Connections of UI Console Assembly with Main Speaker.
Controller (SFP)	Figure 12	Connections of LVPS Board with SFP ESS Board. Connections of SFP ESS Board with UI Console Assembly. Connections of SFP ESS Board with Wireless Module. Connections of SFP ESS Board with EMMC Board.
Scanner	Figure 13	Connections of MFP ESS Board with IIT Assembly. Connections of MFP ESS Board with DADF Assembly.

Power Wiring Diagram

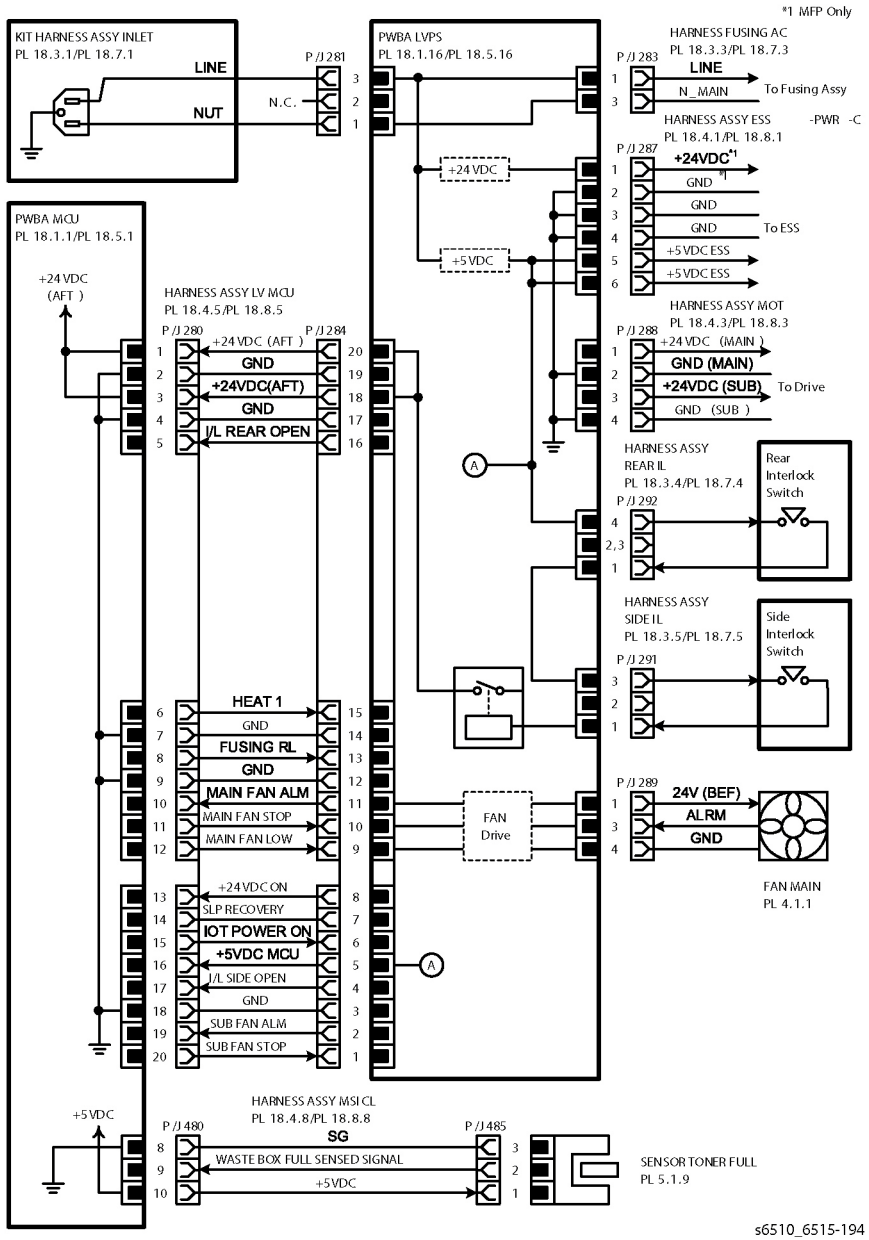

Figure 1 Power Wiring Diagram

LVPS overcurrent protection circuit

Each output (+24VDC, +5VDC) of LVPS stops all outputs if it is shorted to ground or between ground.

LVPS overvoltage protection circuit

- Each output (+24VDC, +5VDC) of LVPS stops all outputs if there is overvoltage.
- The operating voltage of the overvoltage protection of each output is as following:
  - +24VDC: 27VDC~36VDC
  - +5VDC: 7VDC

Table 2 describes the power and distribution signal lines.

Table 2 Power Regulation and Distribution Signal Lines

Signal Line Name	Description
I/L R OPEN	The Open/Close Detection Signal of the Rear Cover
I/L S OPEN	The Open/Close Detection Signal of the Side Cover
MAIN FAN STOP MAIN FAN LOW	Control signal of the Main Fan
IOT PWR ON	Control signal of the LVPS Board
HEAT 1 Fuser RL	Temperature control signal of the Fuser Assembly
WASTE CARTRIDGE FULL SENSED SIGNAL	Full detect signal of the Waste Cartridge Assembly by the Toner Full Sensor

Drive Wiring Diagram

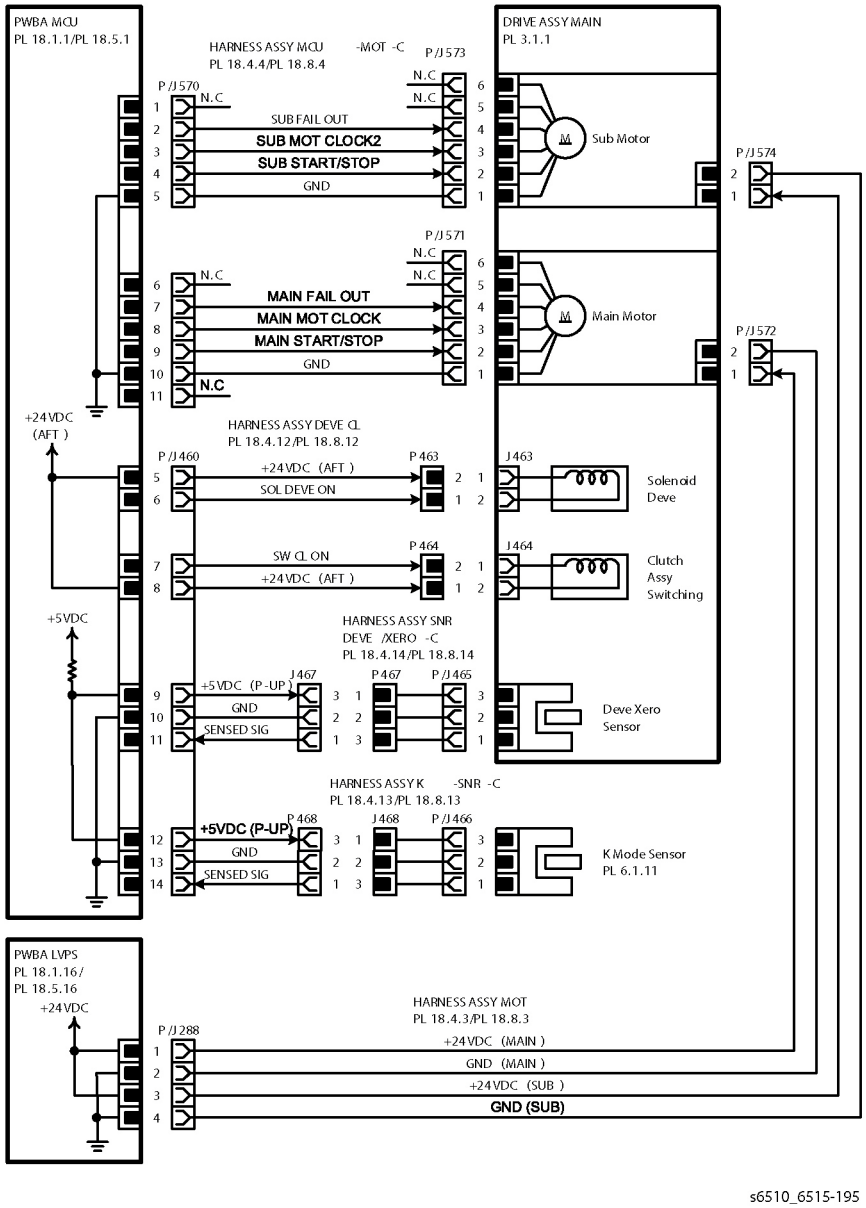

Figure 2 Drive Wiring Diagram

Table 3 describes the drive signal lines.

Table 3 Drive Signal Lines

Signal Line Name	Description
MAIN MOT CLOCK MAIN MOT START/STOP SUB MOT CLOCK SUB MOT START/STOP	Drive control signal of the Main Drive Assembly (Main Motor, Sub Motor)
SOL DEVE ON	ON/OFF signal of the Solenoid Deve
SW CL ON	ON/OFF signal of the Clutch Assy Switching
SENSED SIGNAL (Deve Xero Sensor)	Color mode detect signal of the Deve Drive Assy by the Deve/Xero Sensor
SENSED SIGNAL (K Mode Sensor)	Position detect signal by the K Mode Sensor

Bypass Tray (MSI) Wiring Diagram

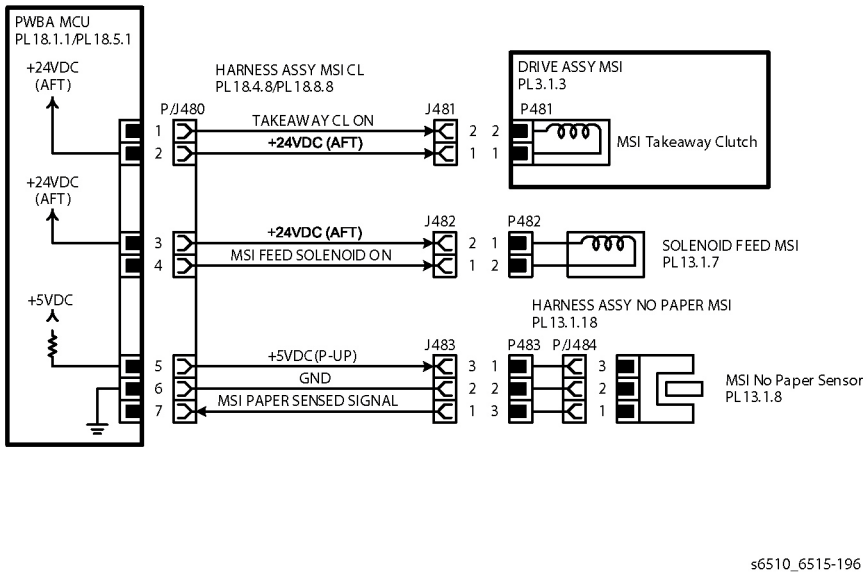

Figure 3 Bypass Tray (MSI) Wiring Diagram

Table 4 describes the bypass tray (MSI) signal lines.

Table 4 Bypass Tray (MSI) Signal Lines

Signal Line Name	Description
TAKEAWAY CL ON	ON/OFF signal of the Takeaway Clutch
MSI FEED SOLENOID ON	ON/OFF signal of the MSI Feed Solenoid
MSI PAPER SENSED SIGNAL	Paper detect signal by the MSI No Paper Sensor

Paper Transfer Wiring Diagram

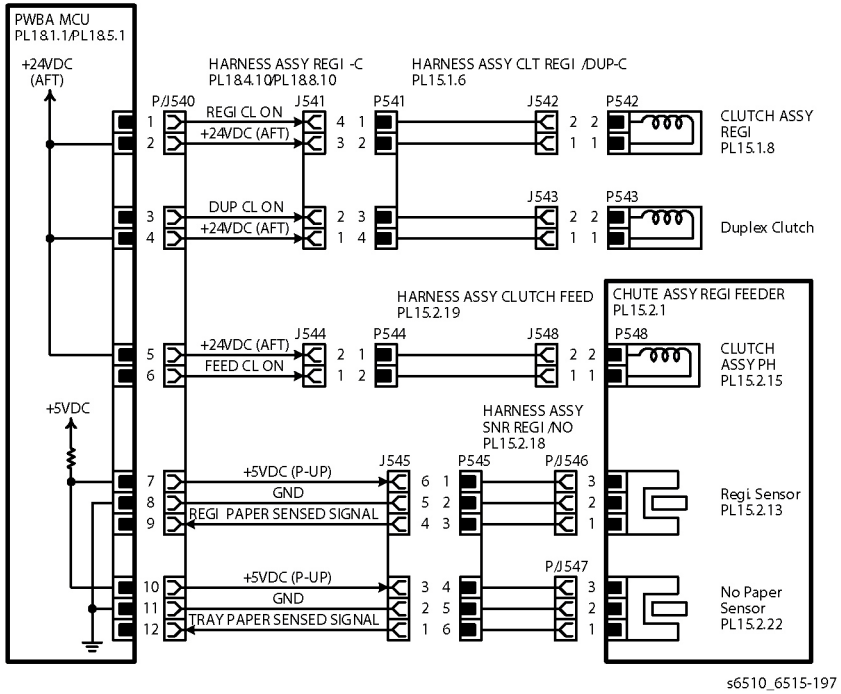

Figure 4 Paper Transfer Wiring Diagram

Table 5 describes the paper transfer signal lines.

Table 5 Paper Transport Signal Lines

Signal Line Name	Description
REGI CL ON	ON/OFF signal for the Regi Clutch
DUP CL ON	ON/OFF signal for the Duplex Clutch
FEED CL ON	ON/OFF signal for the PH (Feed) Clutch
REGI PAPER SENSED SIGNAL	Paper detect signal by the Regi Sensor
TRAY PAPER SENSED SIGNAL	Paper detect signal by the No Paper Sensor

HVPS Wiring Diagram

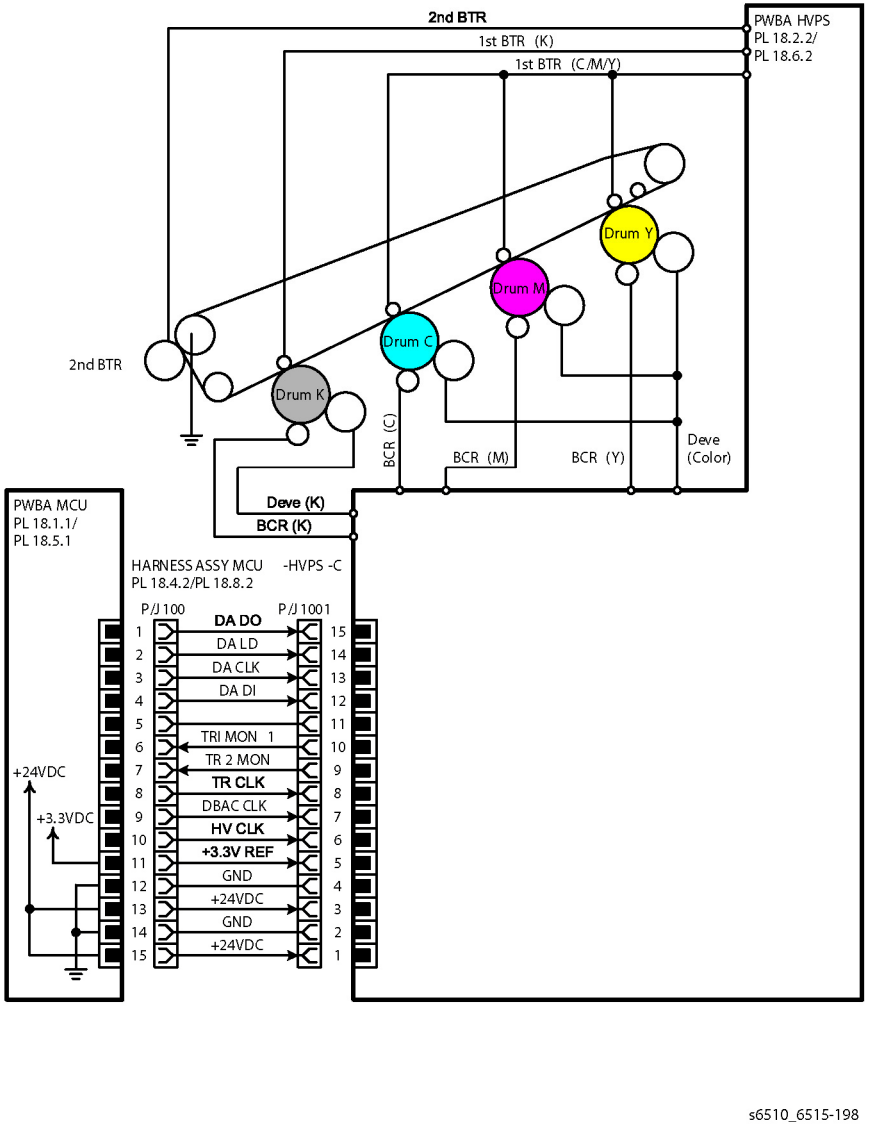

Figure 5 HVPS Wiring Diagram

Table 6 describes the HVPS signal lines.

Table 6 HVPS Signal Lines

Signal Line Name	Description
DA DO DA LD DA CLK DA DI TRI MON1 TR2 MON TR CLK DBAC CLK HV CLK	Control signal of the HVPS

Xerographic Wiring Diagram

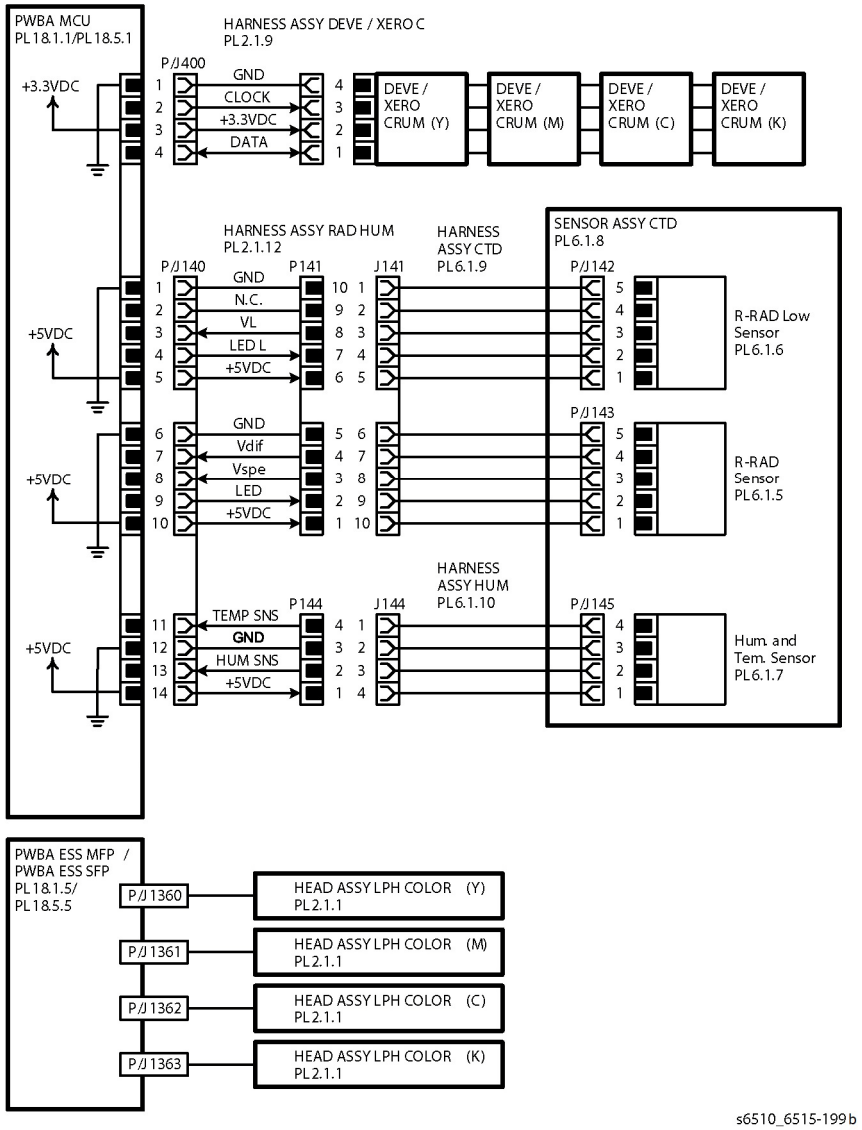

Figure 6 Xerographic Wiring Diagram

Table 7 describes the Xerographic signal lines.

Table 7 Xerograph Signal Lines

Signal Line Name	Description
DATA XERO CLOCK XERO	Control signal of the DEVE/XERO CRUM
VL Vdif Vspe	Toner patch density data measured by the R-RAD Sensor and the R-RAD Low Sensor
TEMP SNS	The temperature data in the machine that is measured by Humidity and Temperature Sensor
HUMI SNS	The humidity data in the machine that is measured by the Humidity Sensor

Table 8 describes the Fuser signal lines.

Table 8 Fuser Signal Lines

Signal Line Name	Description
STS CONT	Temperature data measured by Temp. Sensor (Safety) for controlling temperature
STS SIDE	Temperature data measured by Temp. Sensor (Cont) for controlling temperature

Fuser Wiring Diagram

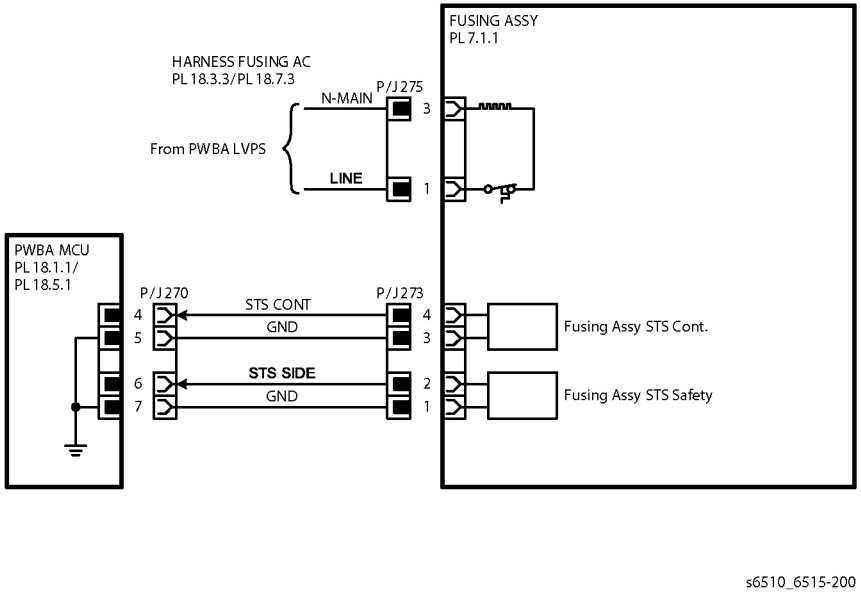

Figure 7 Fuser Wiring Diagram

Developer Wiring Diagram

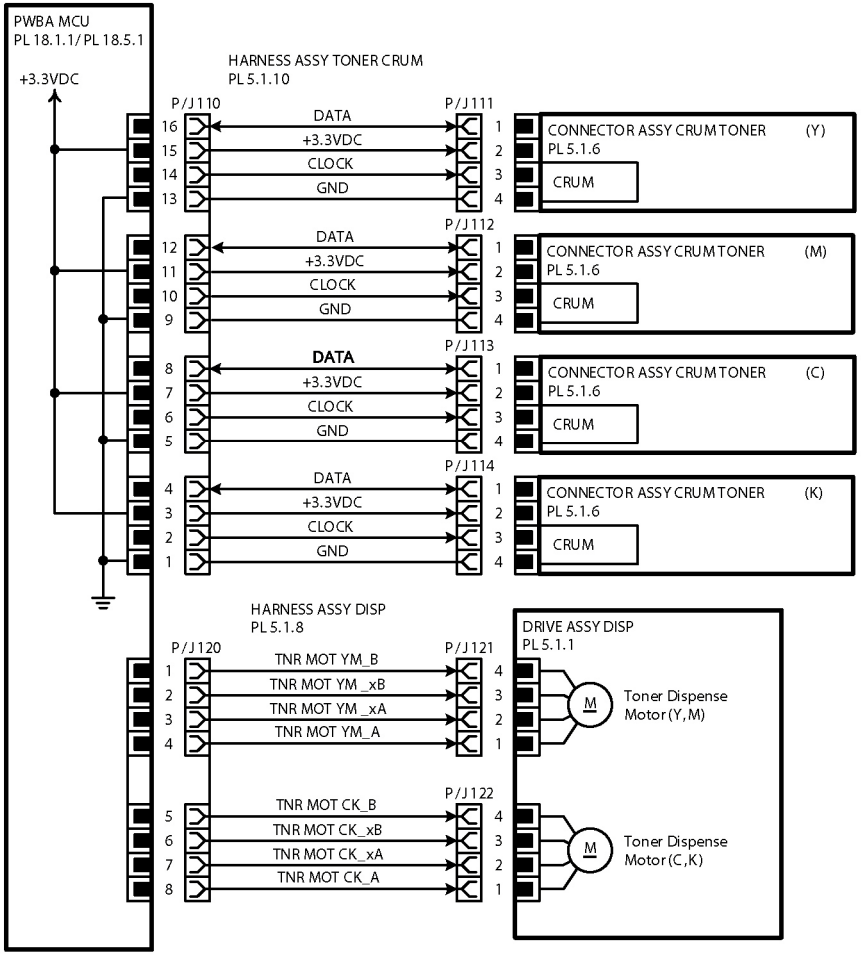

Figure 8 Developer Wiring Diagram

Table 9 describes the developer signal lines.

Table 9 Developer Signal Lines

Signal Line Name	Description
DATA TONER CLOCK TONER	Control signal of the Toner CRUM Connector Assembly
TNR MOT YM_B TNR MOT YM_xB TNR MOT YM_xA TNR MOT YM_A	Control signal of the Toner Dispense Motor (Y/M)
TNR MOT CK_B TNR MOT CK_xB TNR MOT CK_xA TNR MOT CK_A	Control signal of the Toner Dispense Motor (C/K)

Exit Wiring Diagram

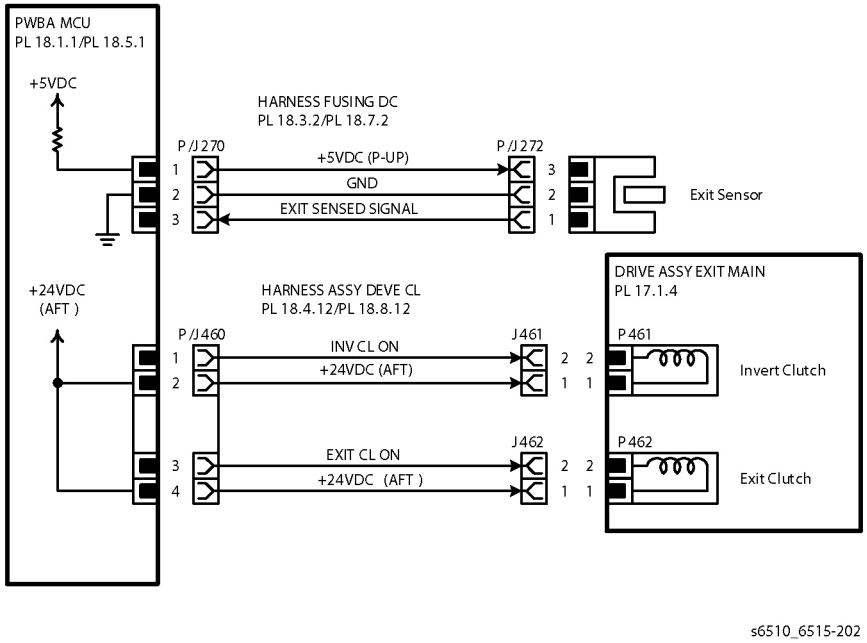

Figure 9 Exit Wiring Diagram

Table 10 describes the exit signal lines.

Table 10 Exit Signal Lines

Signal Line Name	Description
EXIT SENSED SIGNAL	Paper detect signal in the Exit section by the Exit Sensor
INV CL ON	ON/OFF signal of the Invert Clutch
EXIT CL ON	ON/OFF signal of the Exit Clutch

550 Option Feeder Wiring Diagram

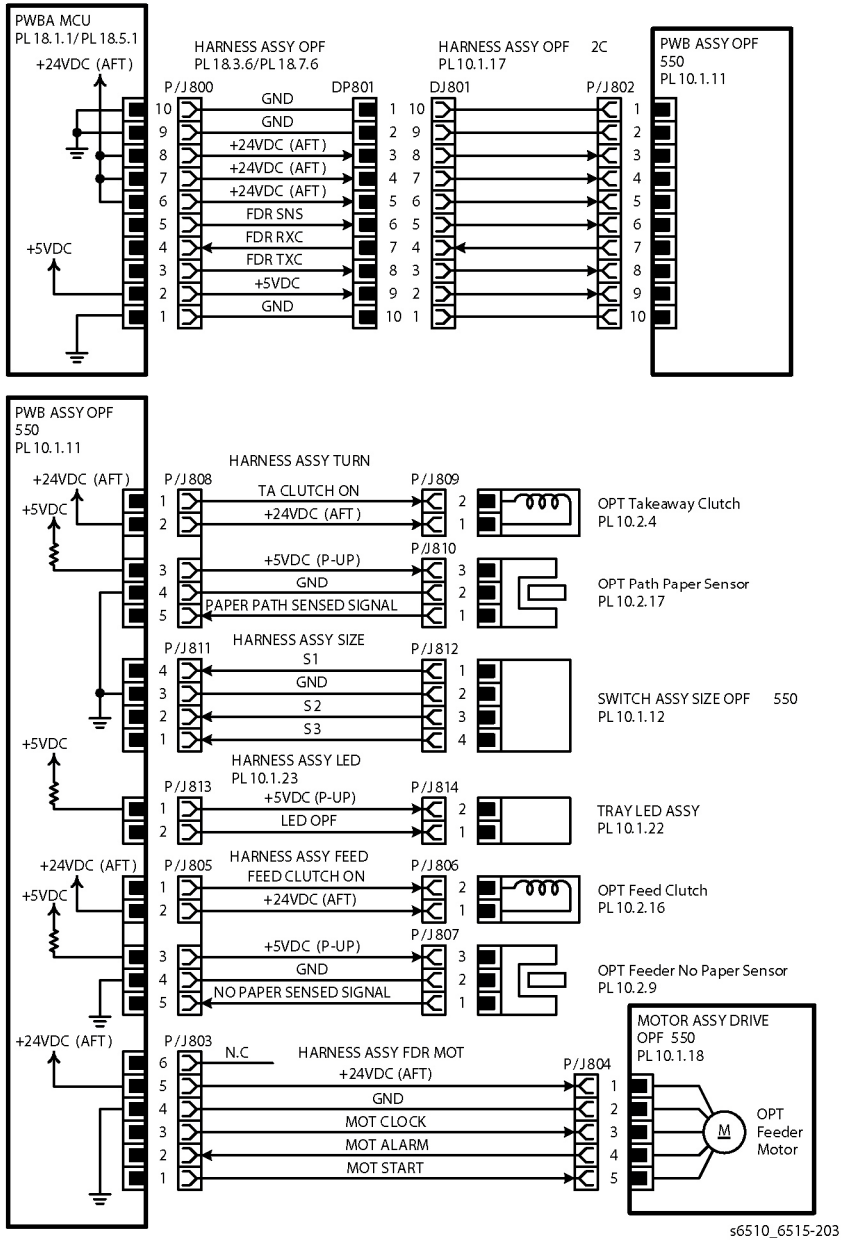

Figure 10 550 Option Feeder Wiring Diagram

Table 11 describes the 550 option feeder signal lines.

Table 11 550 Option Feeder Signal Lines

Signal Line Name	Description
FDR SNS FDR RXC FDR TXC	Detect signal of the 550 Option Feeder
TA CLUTCH ON	ON/OFF signal of the OPT Takeaway Clutch
PAPER PATH SENSED SIGNAL	Paper detect signal by the OPT Path Paper Sensor
S1 S2 S3	Paper size detect signal by the 550 Option Feeder Size Switch Assembly
FEED CLUTCH ON	ON/OFF signal of the OPT Feed Clutch
MOT CLOCK MOT ALARM MOT START	Control signal of the 550 Option Feeder Drive Motor Assembly
NO PAPER SENSED SIGNAL	Drive control signal of the Option Feeder Motor

Controller Wiring Diagram

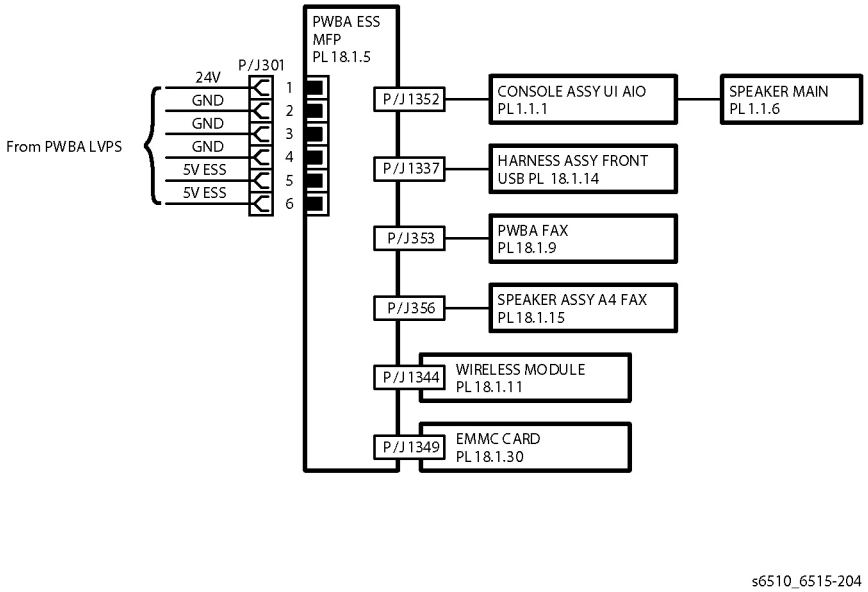

Figure 11 Controller Wiring Diagram (MFP)

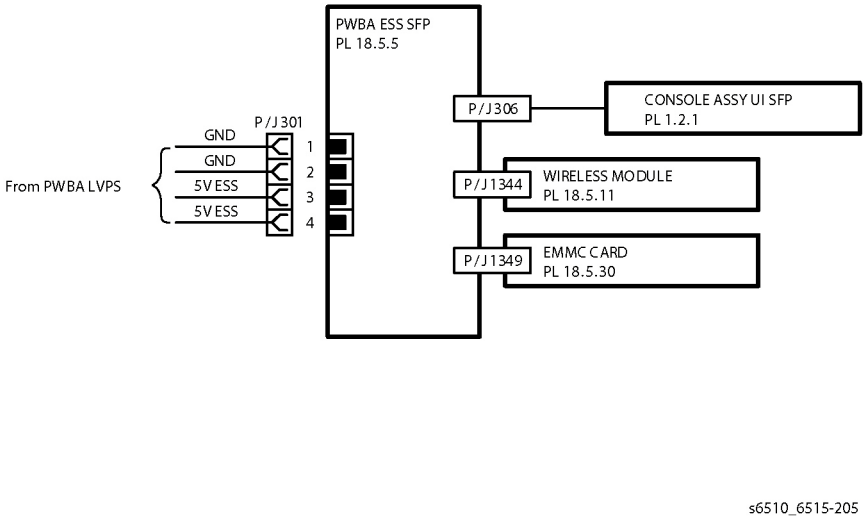

Figure 12 Controller Wiring Diagram (SFP)

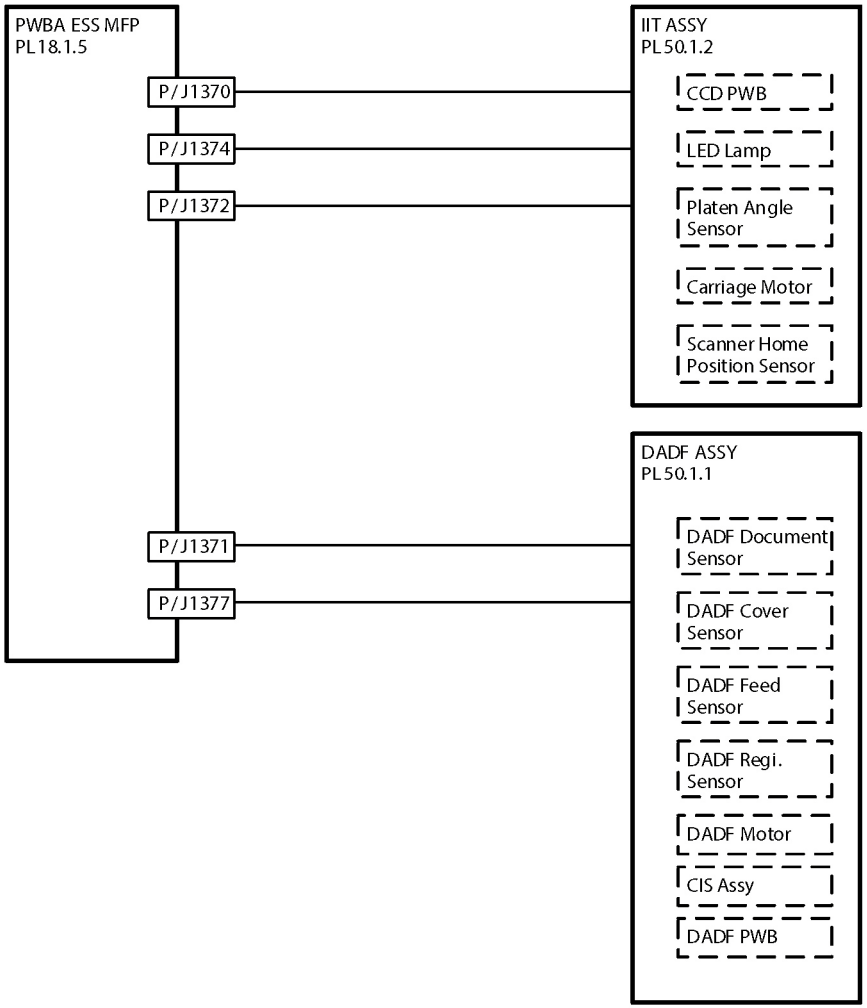

s6510_6515-206

Figure 13 Scanner Wiring Diagram

MFP Harness Routings

The following illustrations show factory harness routing paths through the MFP chassis. Refer to Table 1 for a list of available routing diagrams.

Table 1 MFP Chassis Harness Routing Diagrams

Diagram	Description	Connectors (P/J)
Figure 1	ESS-Power-C, Motor	287, 288, 301, 572, 574
Figure 2	MCU LV	280, 284
Figure 3	Optional Feeder, Rear IL, Side IL	291, 292, 800, 801
Figure 4	AC Inlet	281
Figure 5	Toner CRUM	110, 111, 112, 113, 114
Figure 6	Developer CL	460, 461, 462, 463, 464, 465, 466, 467, 468
Figure 7	MCU-Motor-C	570, 571, 573
Figure 8	Fuser DC	270, 272, 273
Figure 9	Fuser AC	275, 283
Figure 10	Dispenser	120, 121, 122
Figure 11	Regi-C, CLT Regi/Dup-C, Feed Clutch, Regi/NO Sensor	540, 541, 542, 543, 544, 545, 546, 547, 548
Figure 12	MCU-HVPS-C, Deve/Xero C Assy, Hum Rad, CTD Assy, Hum Assy	100, 140, 141, 142, 143, 144, 145, 400, 1001
Figure 13	MSI CL, MSI No Paper	480, 481, 482, 483, 484, 485,
Figure 14	LPH Color FFC Y/M/C/K	1360, 1361, 1362, 1363
Figure 15	ESS MCU FFC, FAX Speaker, Main Speaker, UI, Front USB, FAX Board	300, 335, 353, 356, 1337, 1350, 1352, 1370, 1371, 1372, 1374, 1377
Figure 16	1st K Supply, 1st YMC Supply, Transfer Supply	501, 502, T601

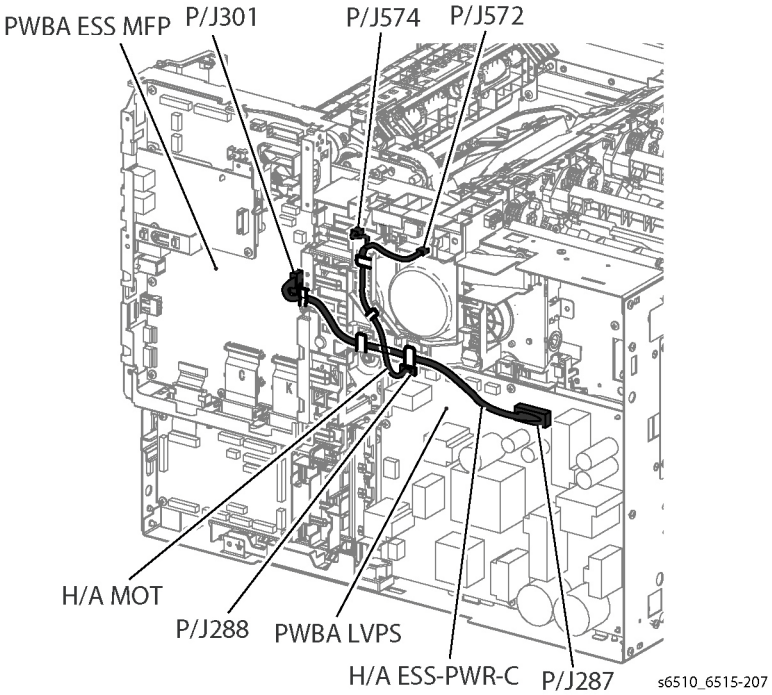

Figure 1 ESS-Power-C, and Motor Harnesses

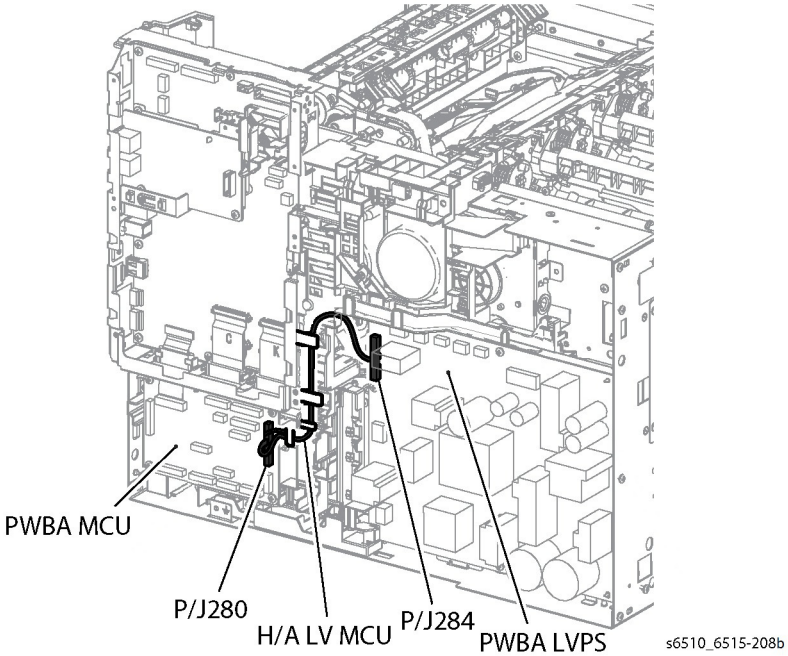

Figure 2 MCU LV Harness

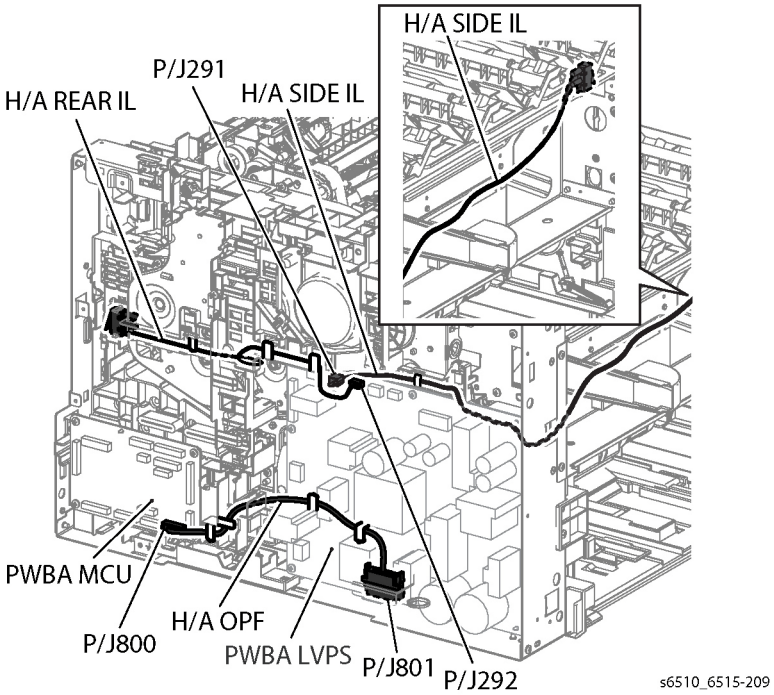

Figure 3 Rear I/L, Side I/L, and Optional Feeder Harnesses

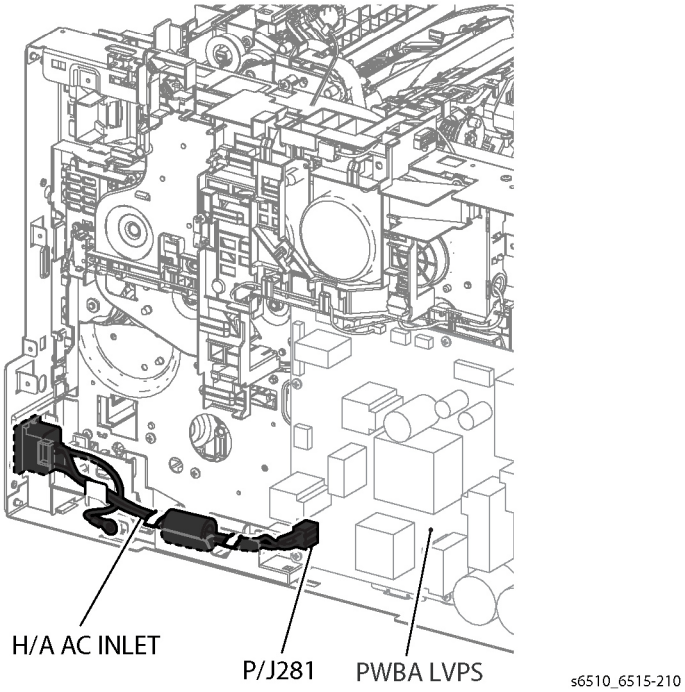

Figure 4 AC Inlet Harness

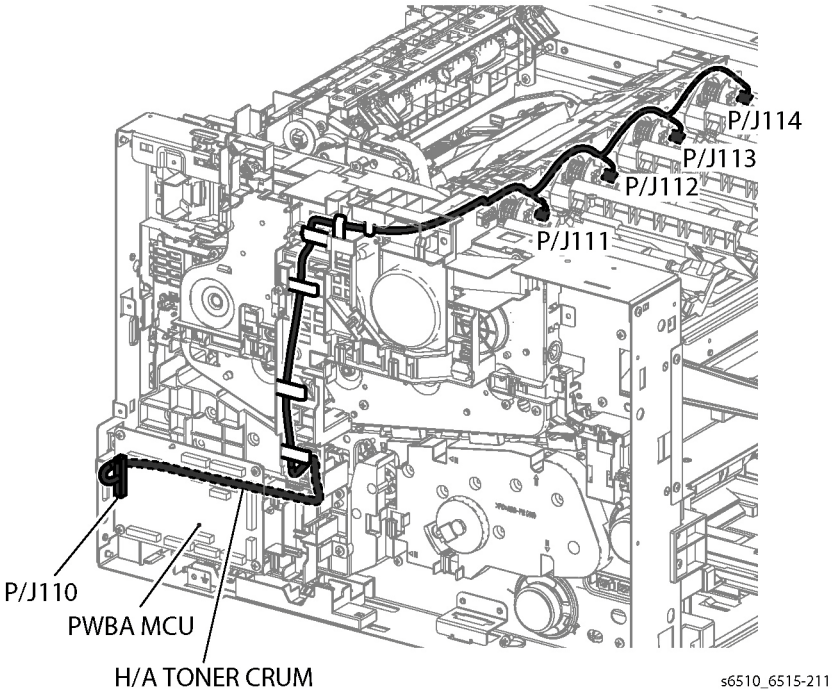

Figure 5 Toner CRUM Harness

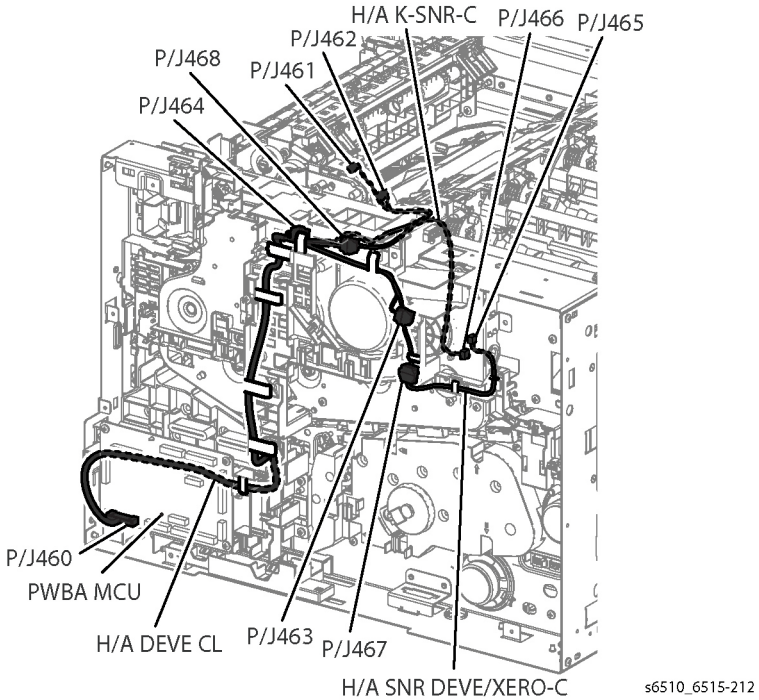

Figure 6 Development Harness

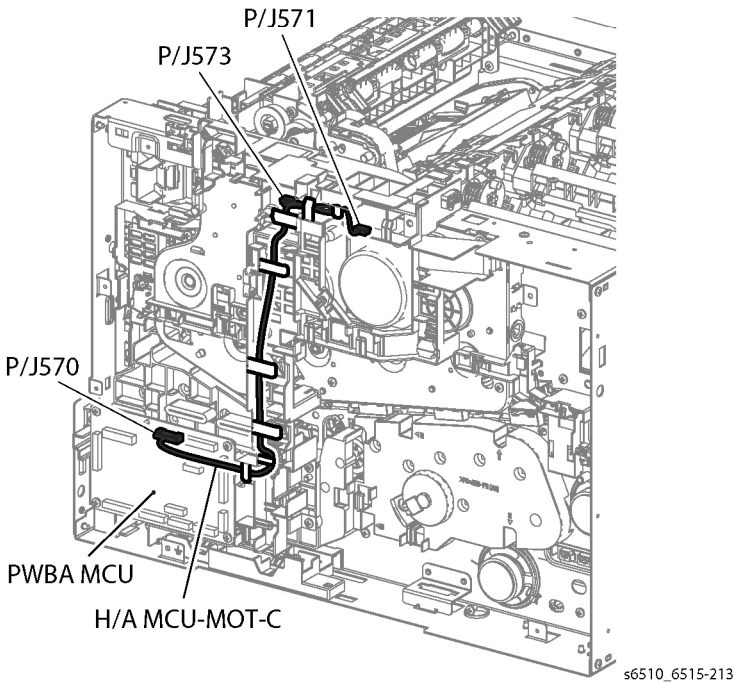

Figure 7 MCU-Motor-C Harness

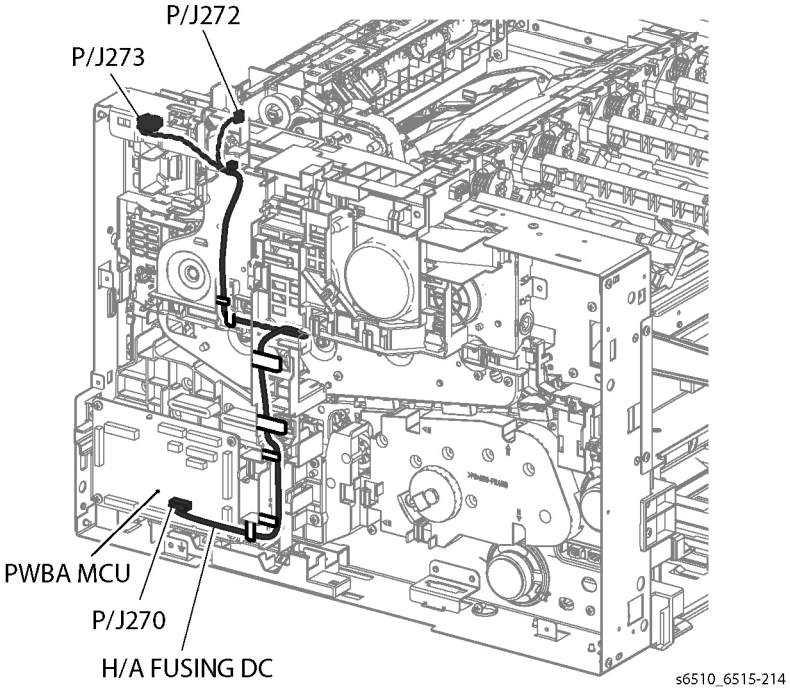

Figure 8 Fuser DC Harness

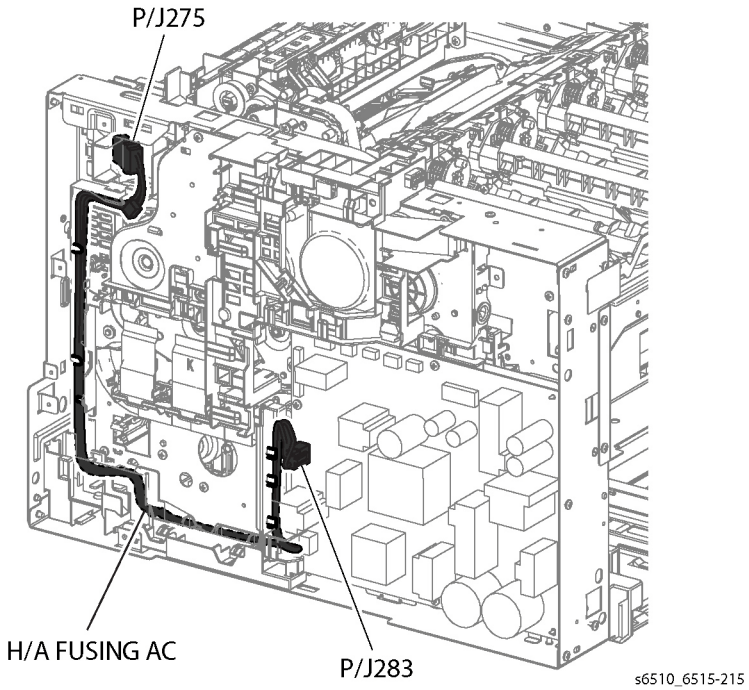

Figure 9 Fuser AC Harness

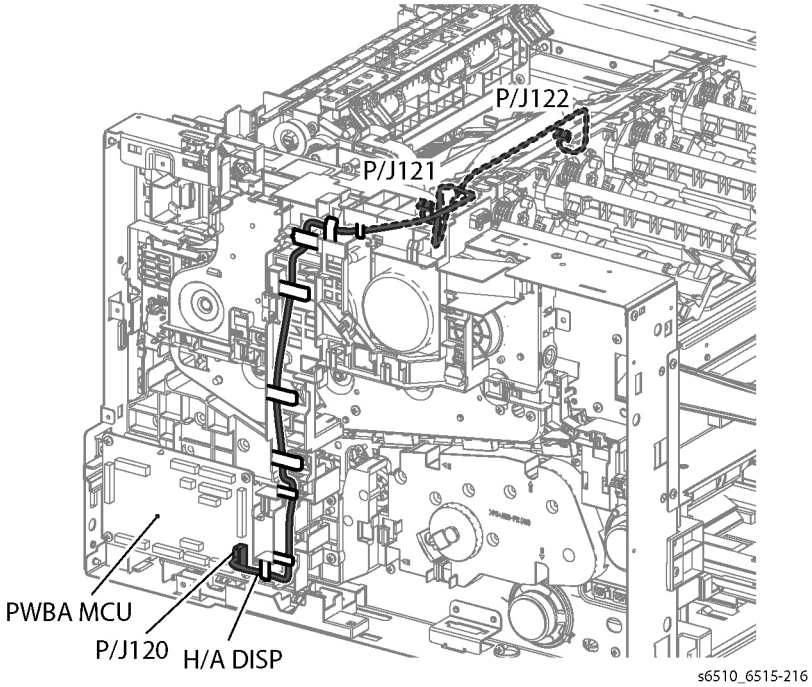

Figure 10 Dispenser Harness

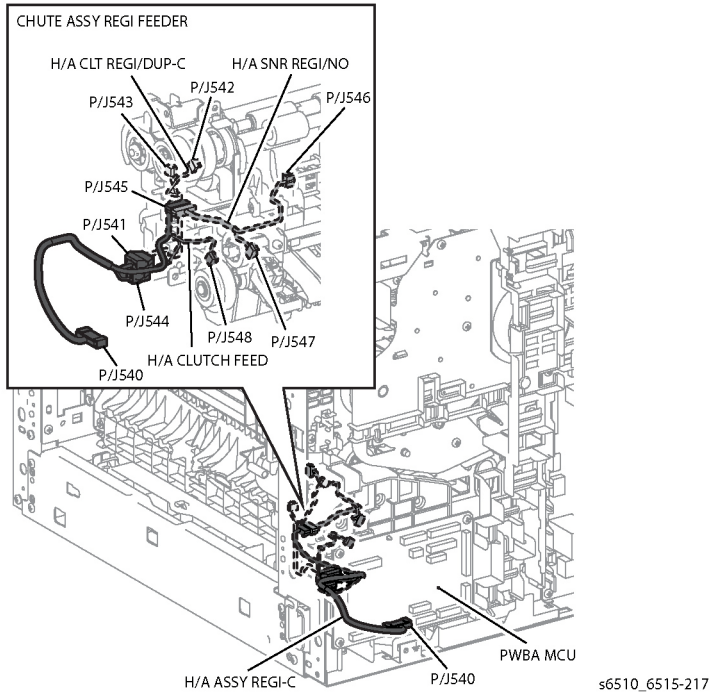

Figure 11 Regi-C, CLT Regi/Dub-C, Feed Clutch, and Regi/NO Sensor Harnesses

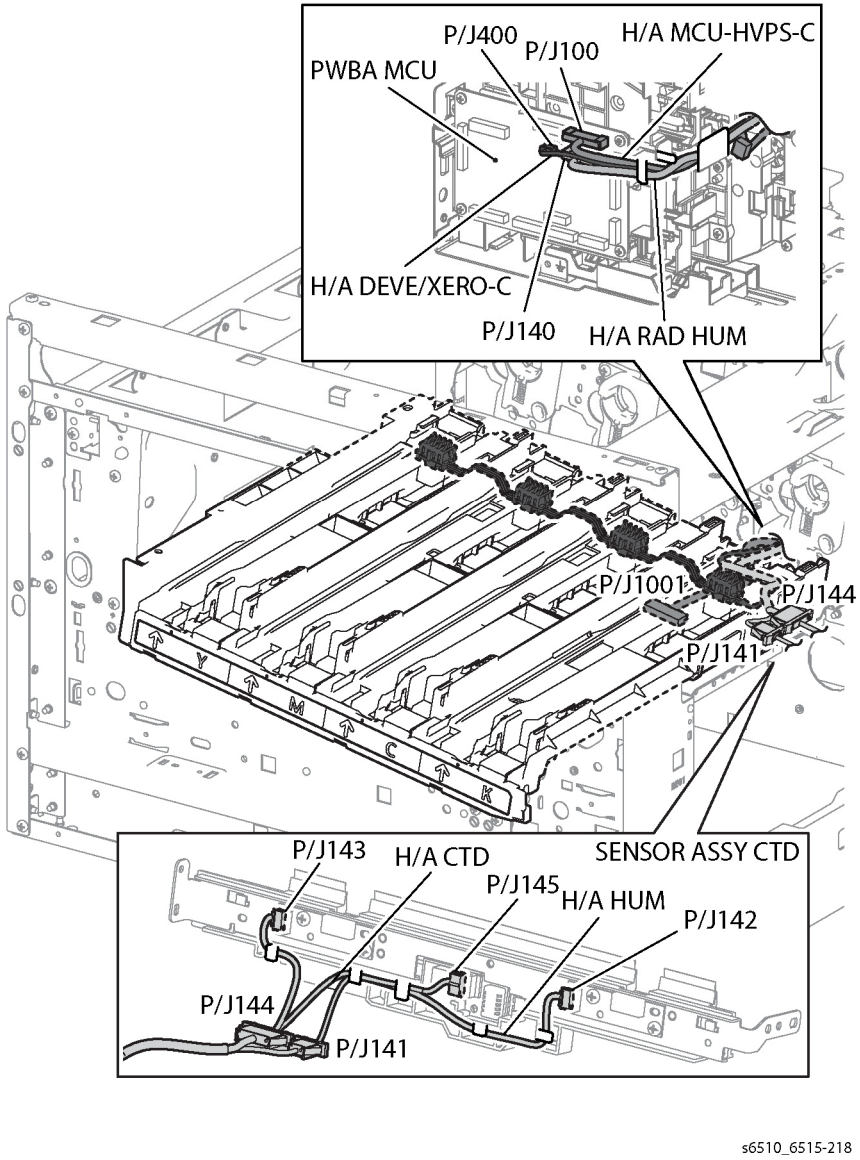

Figure 12 MCU-HVPS-C, Deve/Xero C Assy, Hum Rad, CTD Assy, and Hum Assy Harnesses

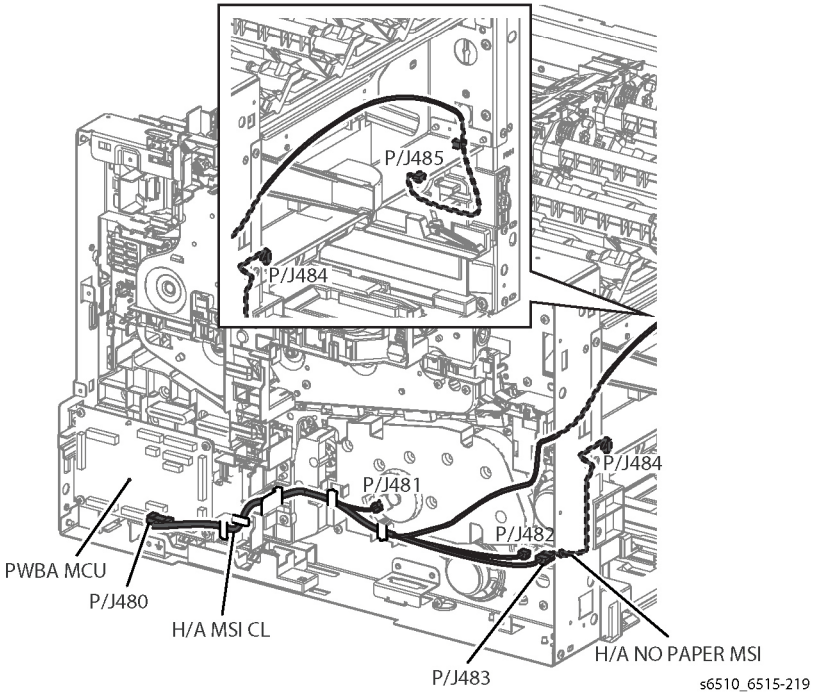

Figure 13 MSI CL, and MSI No Paper Harnesses

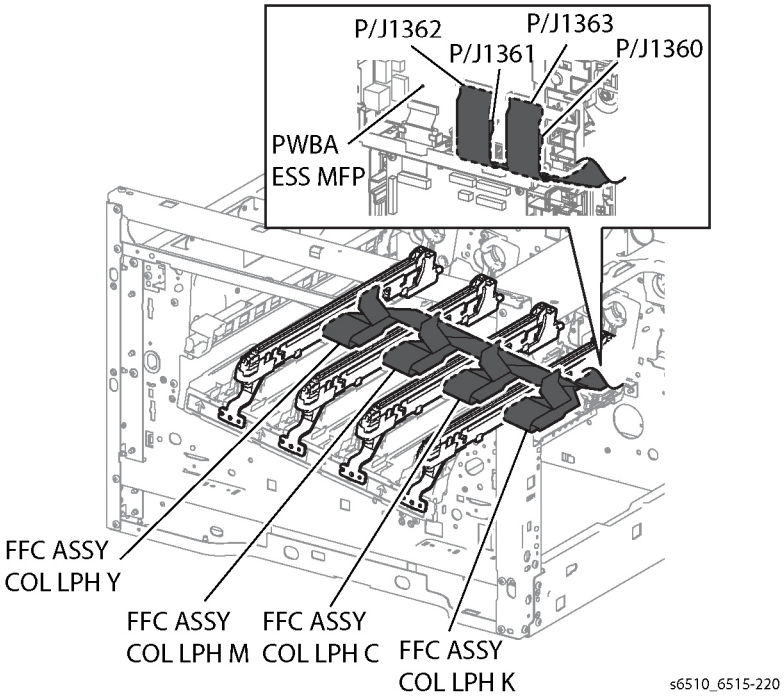

Figure 14 LPH Color FFC Y/M/C/K Harnesses

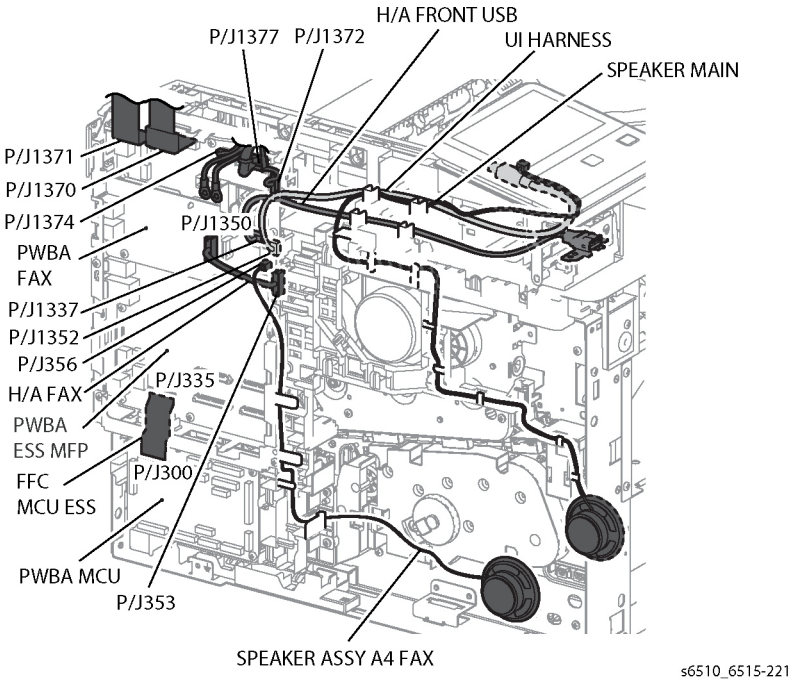

Figure 15 ESS MCU FFC, FAX Speaker, Main Speaker, UI, Front USB, and FAX Board Harnesses

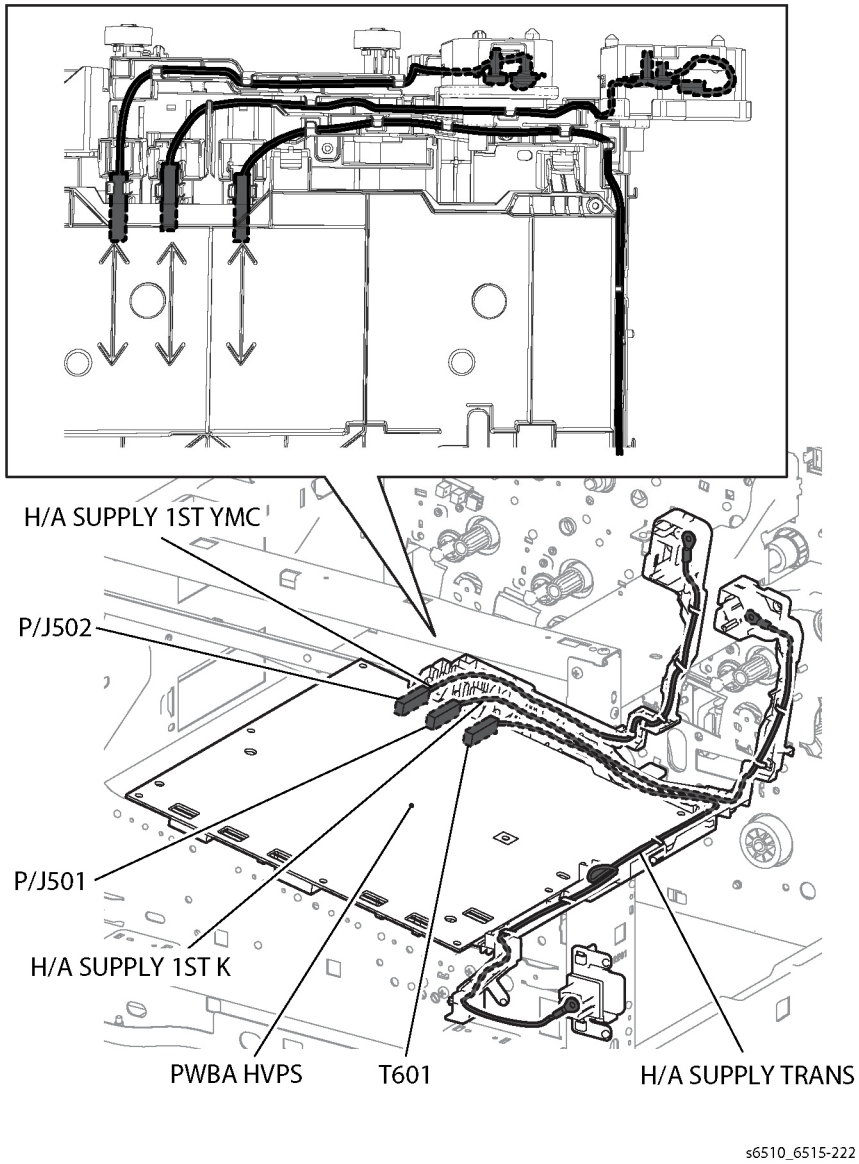

Figure 16 1st K Supply, 1st YMC Supply, and Transfer Supply Harnesses

SFP Harness Routings

The following illustrations show factory harness routing paths through the SFP chassis. Refer to Table 1 for a list of available routing diagrams.

Table 1 SFP Chassis Harness Routing Diagrams

Diagram	Description	Connectors (P/J)
Figure 1	ESS-Power-C, Motor	287, 288, 301, 572, 574
Figure 2	MCU LV	280, 284
Figure 3	Optional Feeder, Rear IL, Side IL	291, 292, 800, 801
Figure 4	AC Inlet	281
Figure 5	Toner CRUM	110, 111, 112, 113, 114
Figure 6	Developer CL	460, 461, 462, 463, 464, 465, 466, 467, 468
Figure 7	MCU-Motor-C	570, 571, 573
Figure 8	Fuser DC	270, 272, 273
Figure 9	Fuser AC	275, 283
Figure 10	Dispenser	120, 121, 122
Figure 11	Regi-C, CLT Regi/Dup-C, Feed Clutch, Regi/NO Sensor	540, 541, 542, 543, 544, 545, 546, 547, 548
Figure 12	MCU-HVPS-C, Deve/Xero C Assy, Hum Rad, CTD Assy, Hum Assy	100, 140, 141, 142, 143, 144, 145, 400, 1001
Figure 13	MSI CL, MSI No Paper	480, 481, 482, 483, 484, 485,
Figure 14	LPH Color FFCs Y/M/C/K	1360, 1361, 1362, 1363
Figure 15	ESS MCU FFC, UI	300, 306, 335
Figure 16	1st K Supply, 1st YMC Supply, Transfer Supply	501, 502, T601

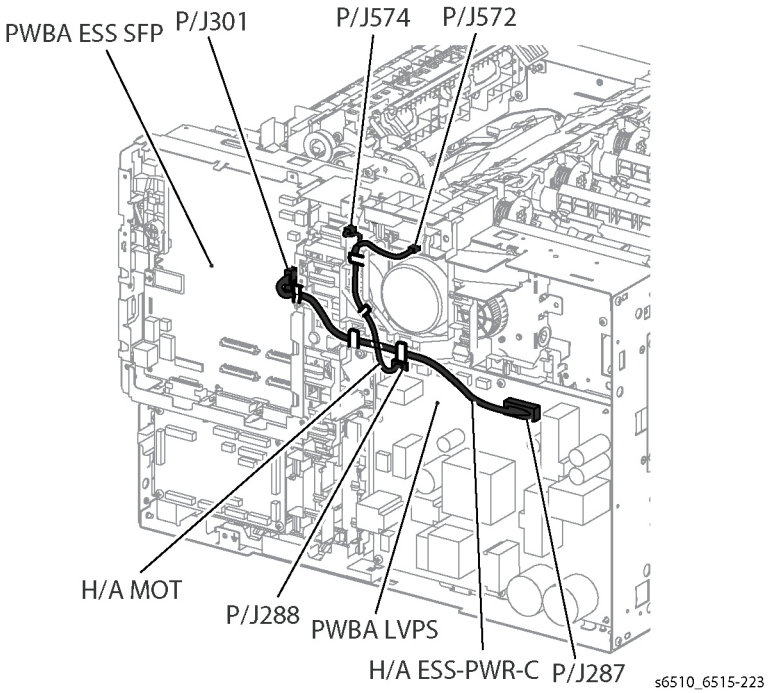

Figure 1 ESS-Power-C, and Motor Harnesses

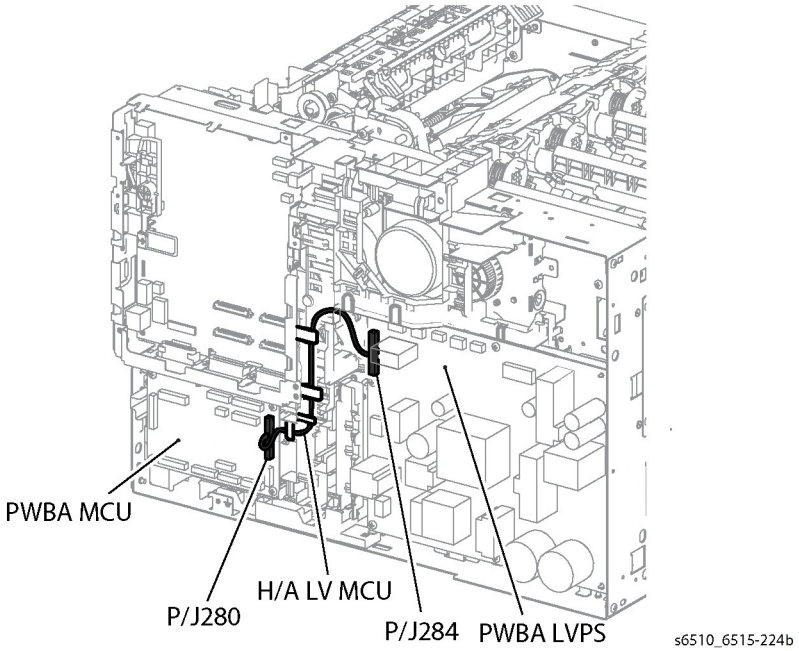

Figure 2 MCU LV Harness

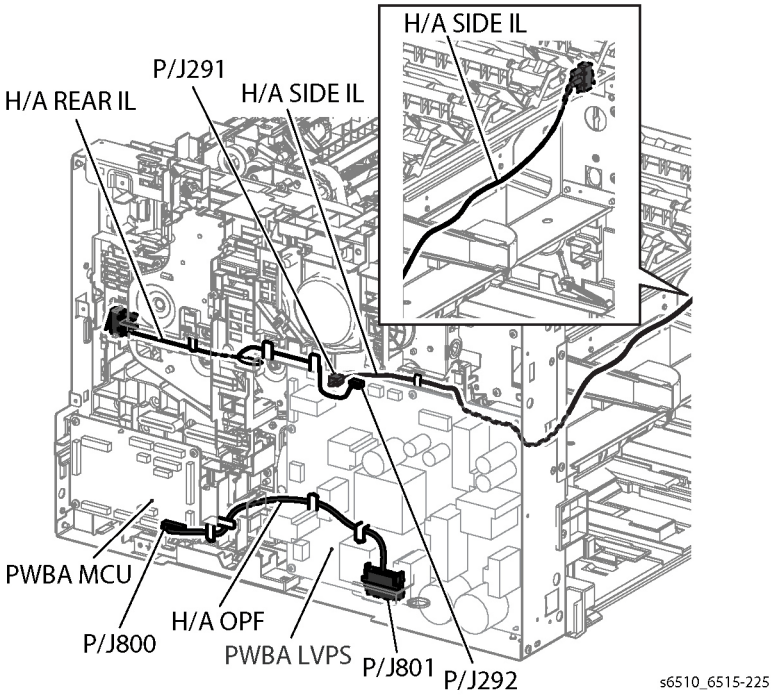

Figure 3 Rear I/L, Side I/L, and Optional Feeder Harnesses

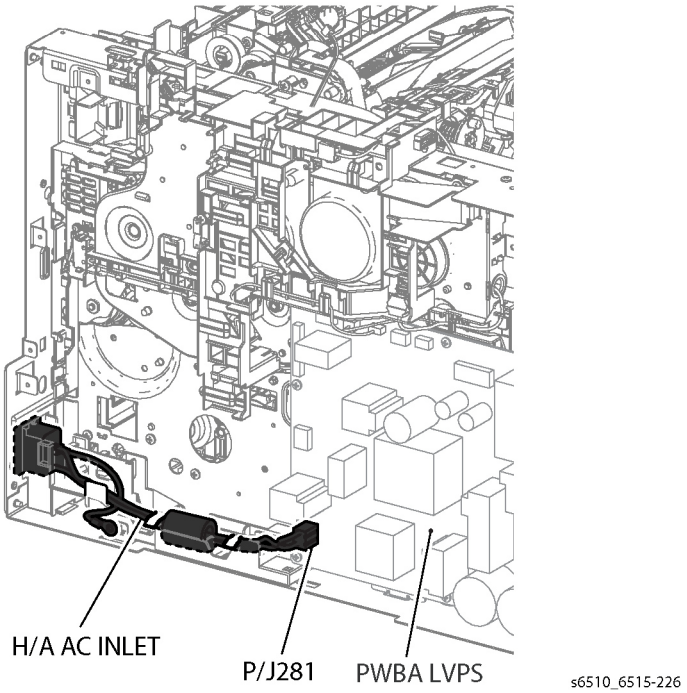

Figure 4 AC Inlet Harness

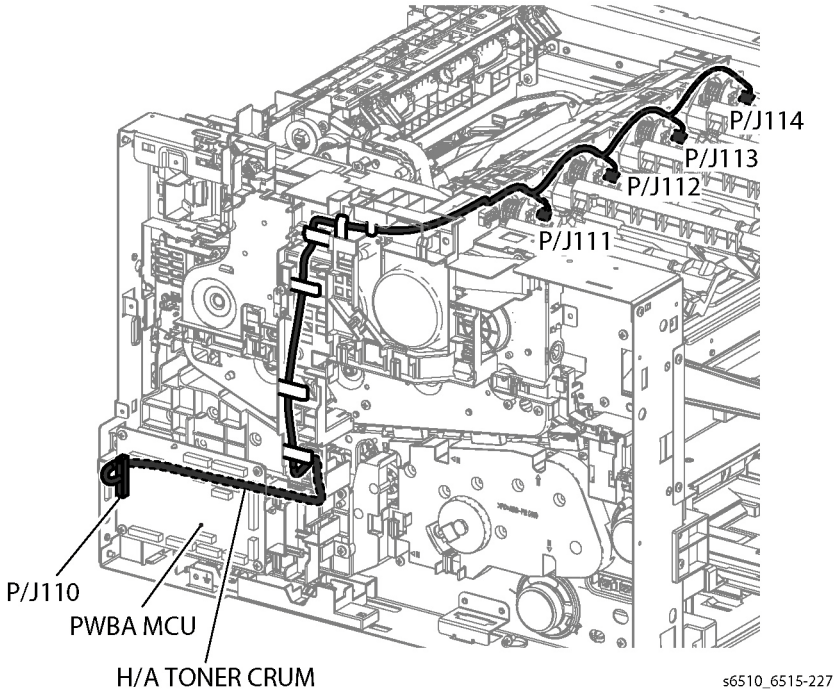

Figure 5 Toner CRUM Harness

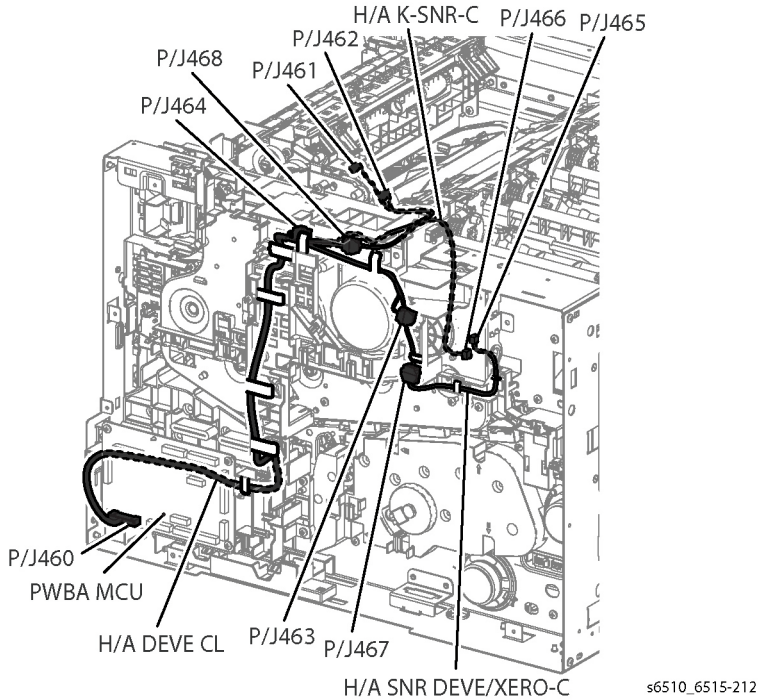

Figure 6 Development Harness

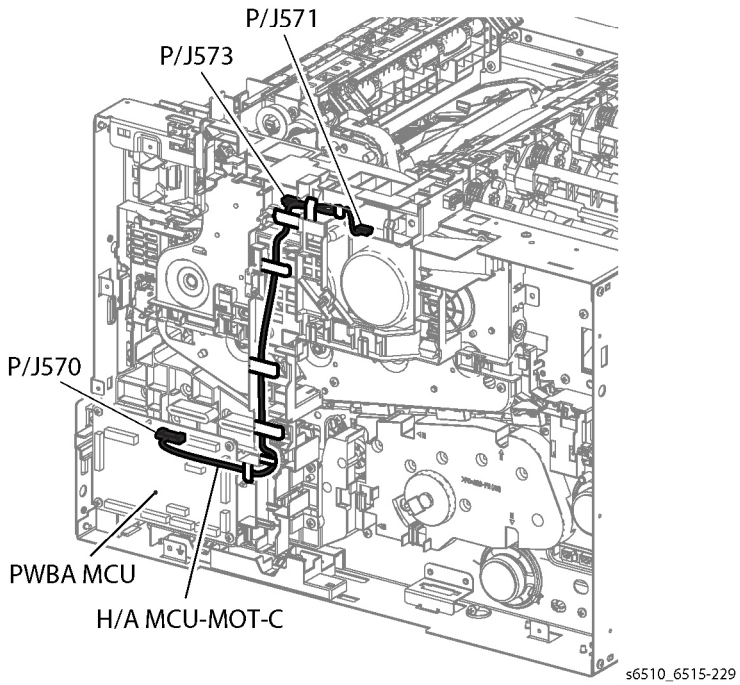

Figure 7 MCU-Motor-C Harness

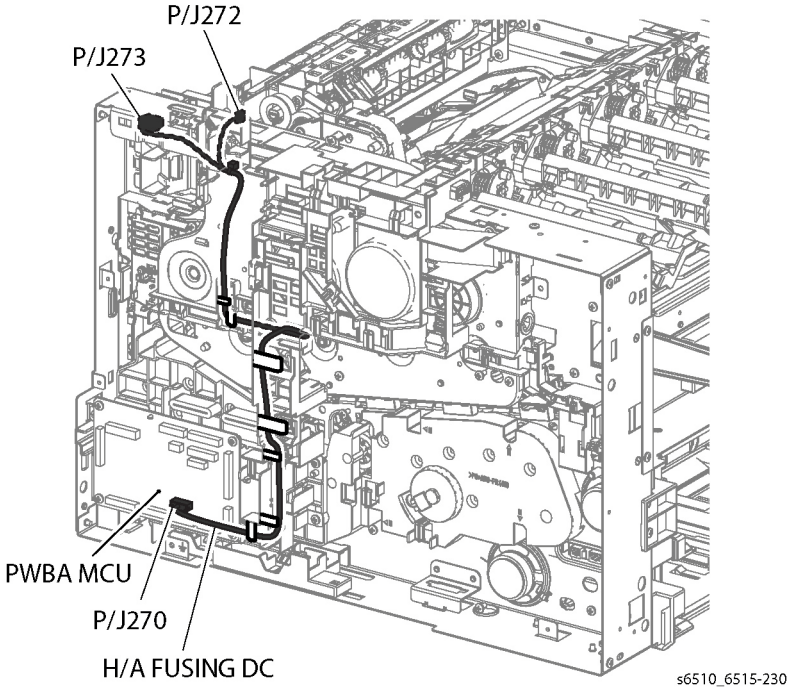

Figure 8 Fuser DC Harness

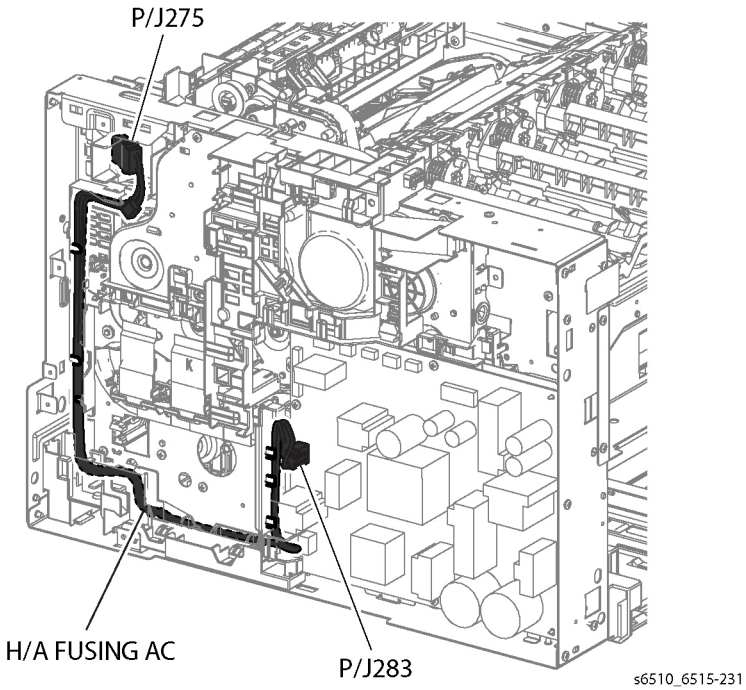

Figure 9 Fuser AC Harness

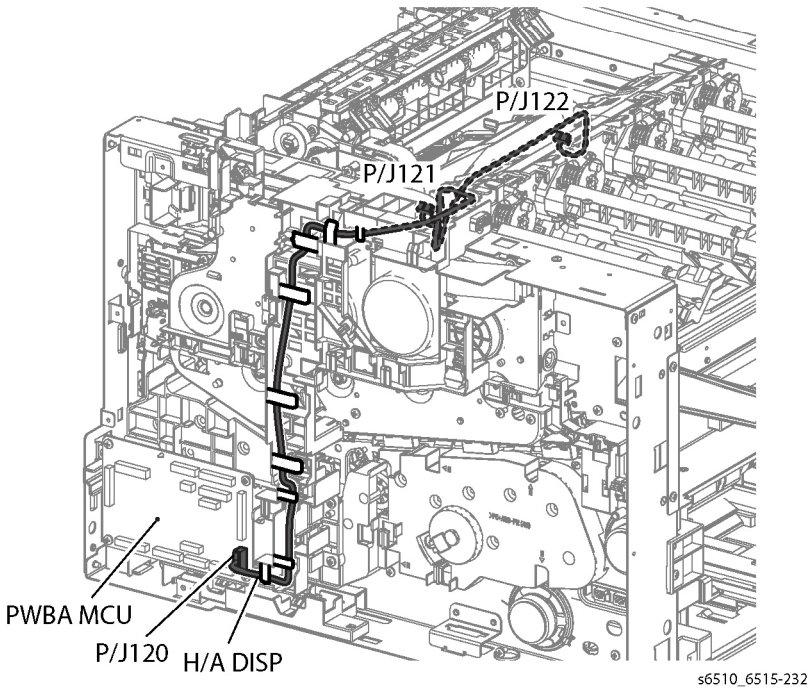

Figure 10 Dispenser Harness

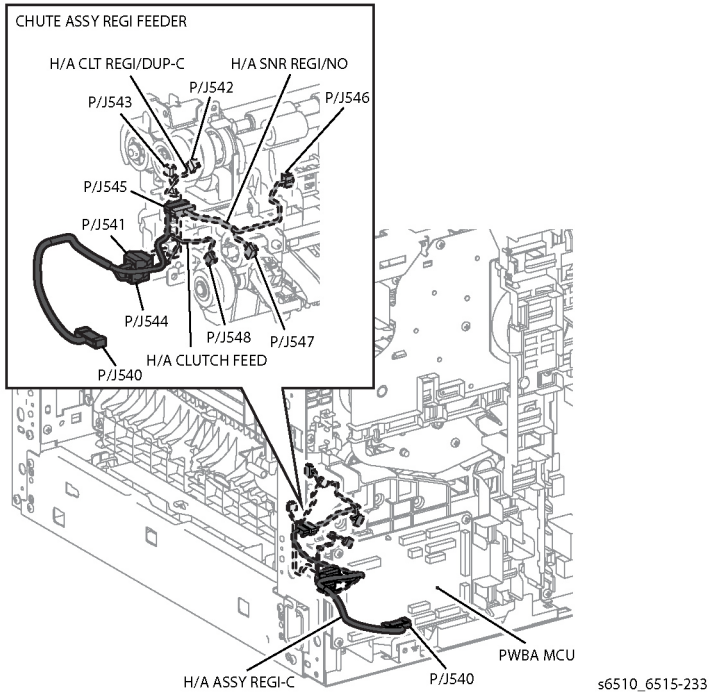

Figure 11 Regi-C, CLT Regi/Dub-C, Feed Clutch, and Regi/NO Sensor Harnesses

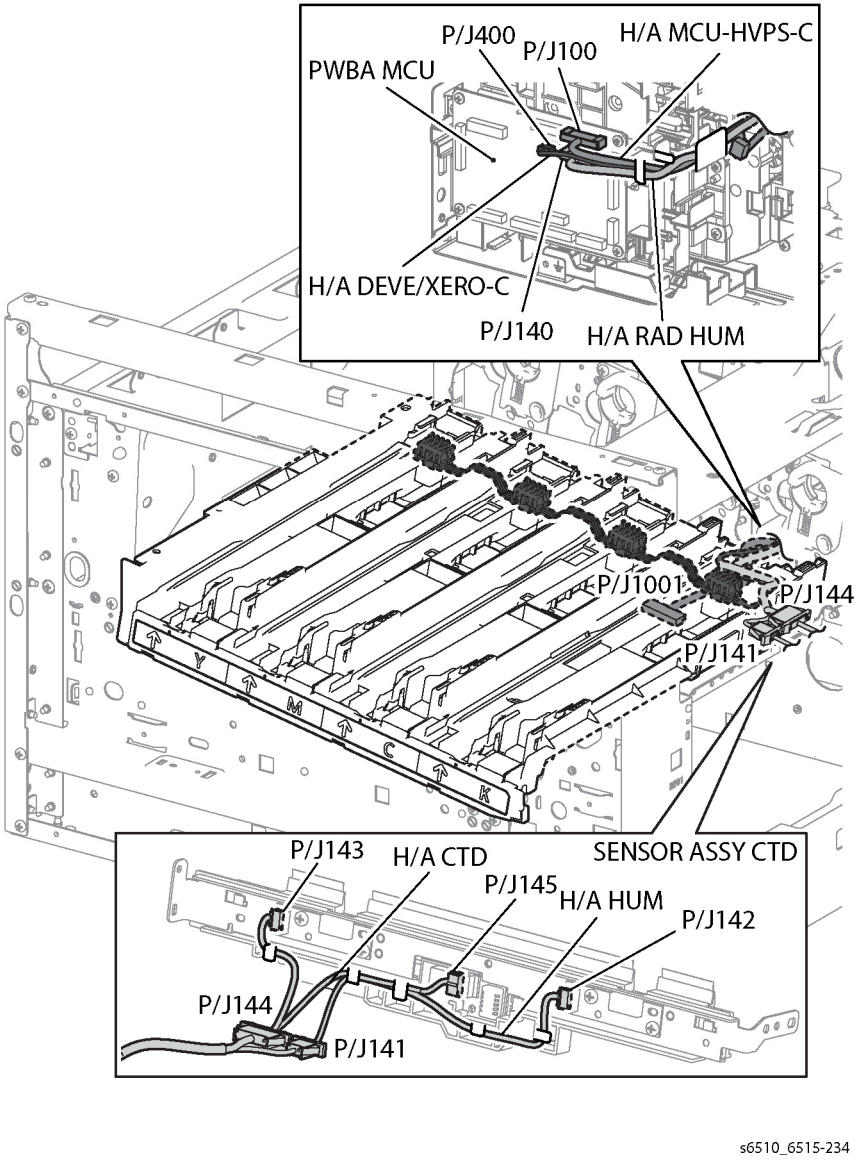

Figure 12 MCU-HVPS-C, Deve/Xero C Assy, Hum Rad, CTD Assy, and Hum Assy Harnesses

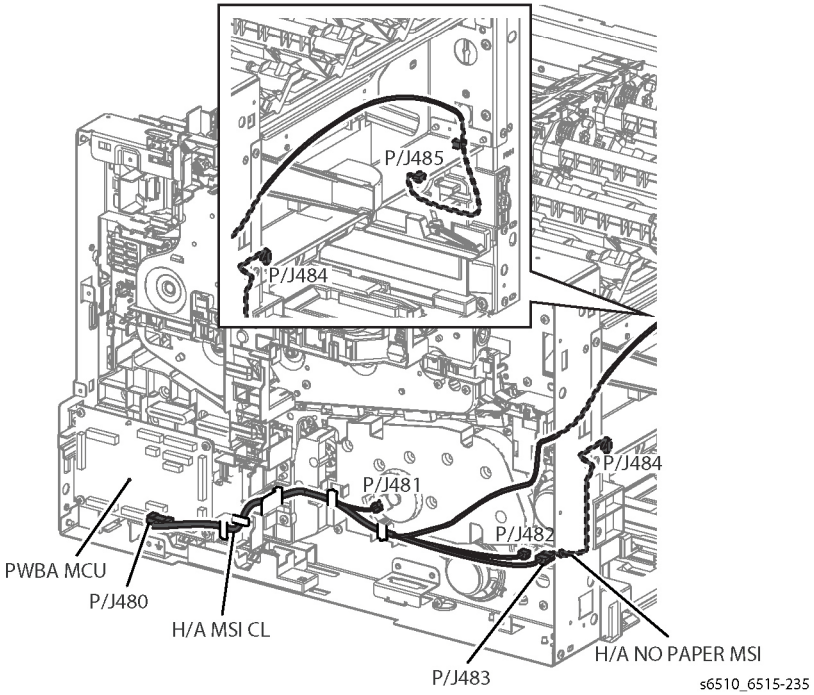

Figure 13 MSI CL, and MSI No Paper Harnesses

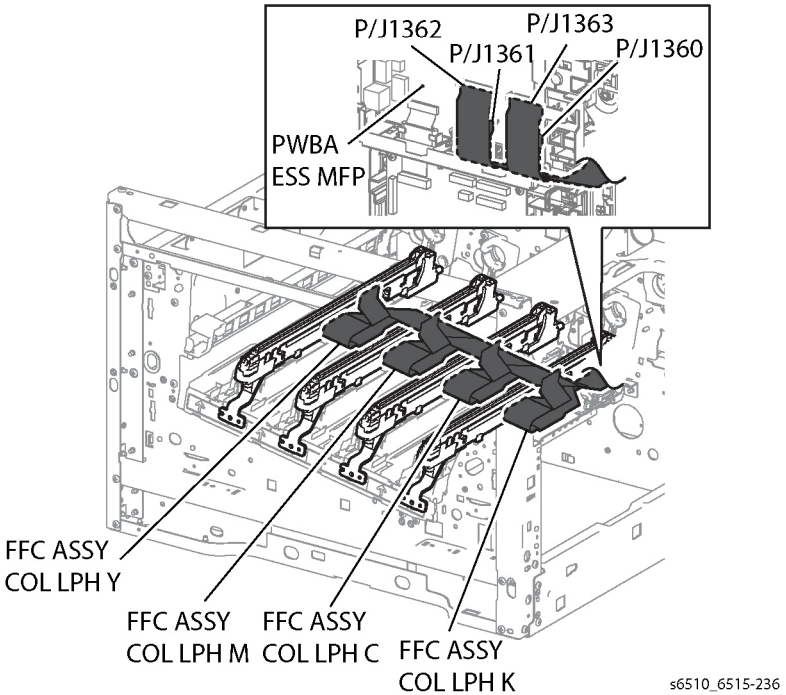

Figure 14 LPH Color FFC Y/M/C/K Harnesses

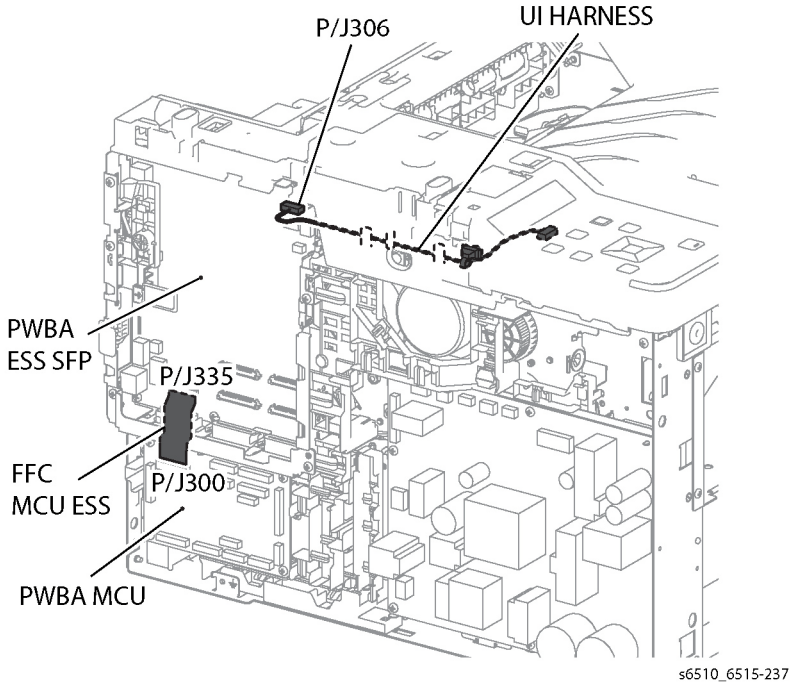

Figure 15 ESS MCU FFC, and UI Harnesses

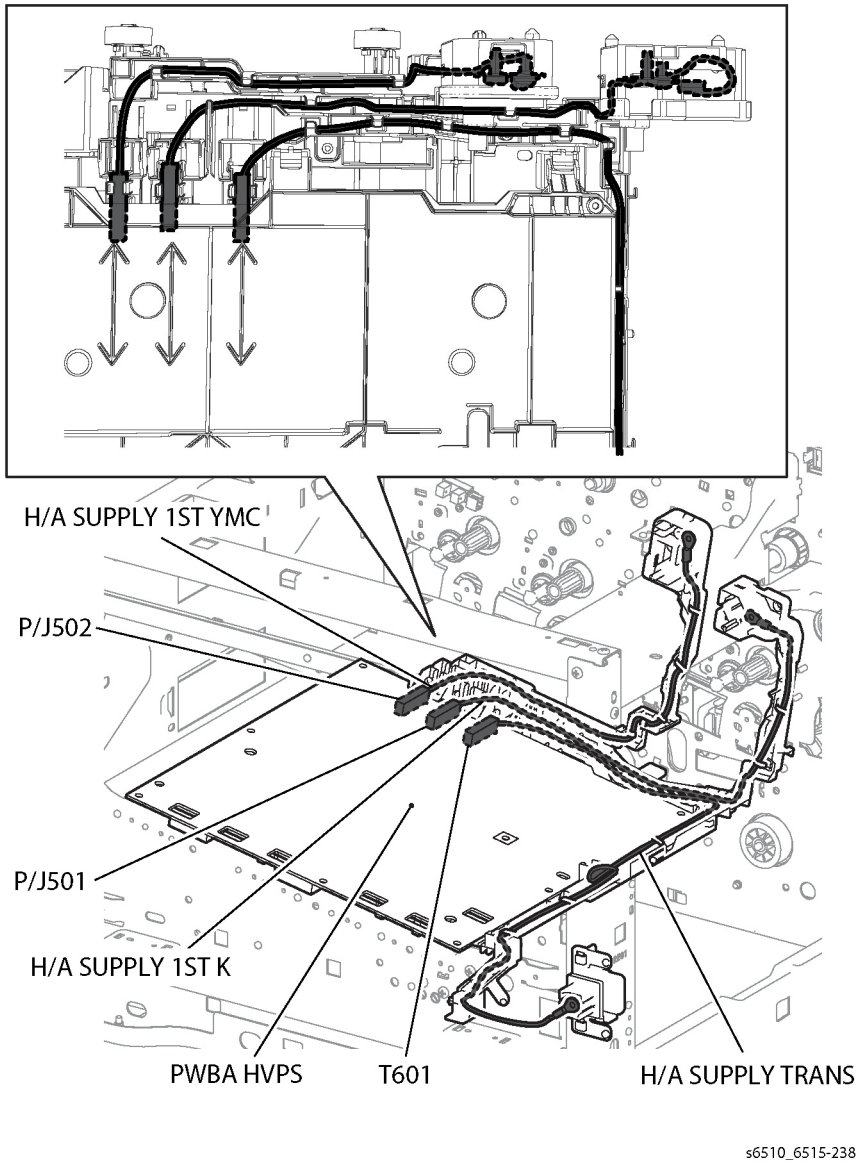

Figure 16 1st K Supply, 1st YMC Supply, and Transfer Supply Harnesses

8 Principles of Operation

Printing Process 8-3
Scanning Process 8-7
Paper Path 8-8
Major Components' Functions 8-13
Control 8-24
Drive Transmission Route 8-26
Options for the Phaser 6510 and WorkCentre 6515 8-29

Printing Process

This section describes the operational characteristics of the Phaser 6510 (SFP) and WorkCentre 6515 (MFP). It provides detailed descriptions of the media path, xerographics, and major assemblies for each model.

Summary of Printing Process

This device is an LED-based full-color xerographic printer operating on a tandem printing system that has four color-specific drum/developer sets for yellow, magenta, cyan, and black (YMCK). The four color-separated images of the original document are created with toner on the drums and then transferred in registration onto the Intermediate Transfer Belt to reproduce a full color image. The completed toner image is transferred and fixed on the print medium, and then output as a print.

The printer's printing process comprises the following basic steps:

1. Charging: The drum surface is electrically charged.
2. Exposure: The image is formed on the drum surface by the light from the LEDs (Light-Emitting Diodes).
3. Development: The image is developed with toner.
4. Primary Transfer: The four color separation images on the drums are transferred onto the Transfer Belt.
5. Cleaning: The drums are electrically neutralized and the toner remaining on the drums and BCRs is removed.
6. Secondary Transfer: The toner image on the Transfer Belt is transferred onto the medium.
7. Neutralization: Electric charge of the paper is eliminated.
8. Cleaning: The toner remaining on the Transfer Belt and 2nd Transfer Roller is removed.
9. Fusing: The toner is fixed to the print medium by heat and pressure.

Figure 1 shows the printing process flow.

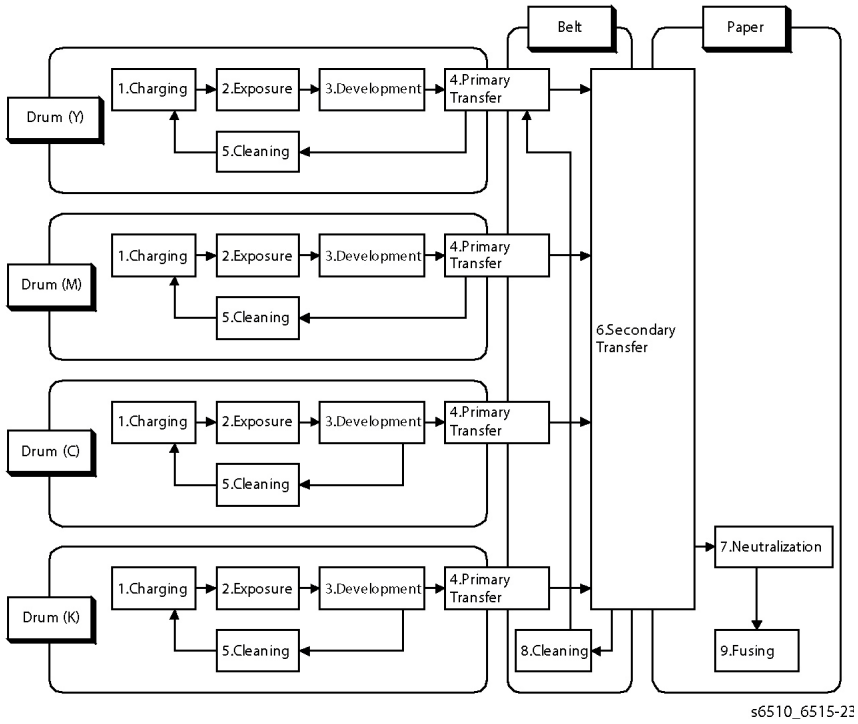

Figure 1 Printing Process Flow

Figure 2 shows the printing process outline.

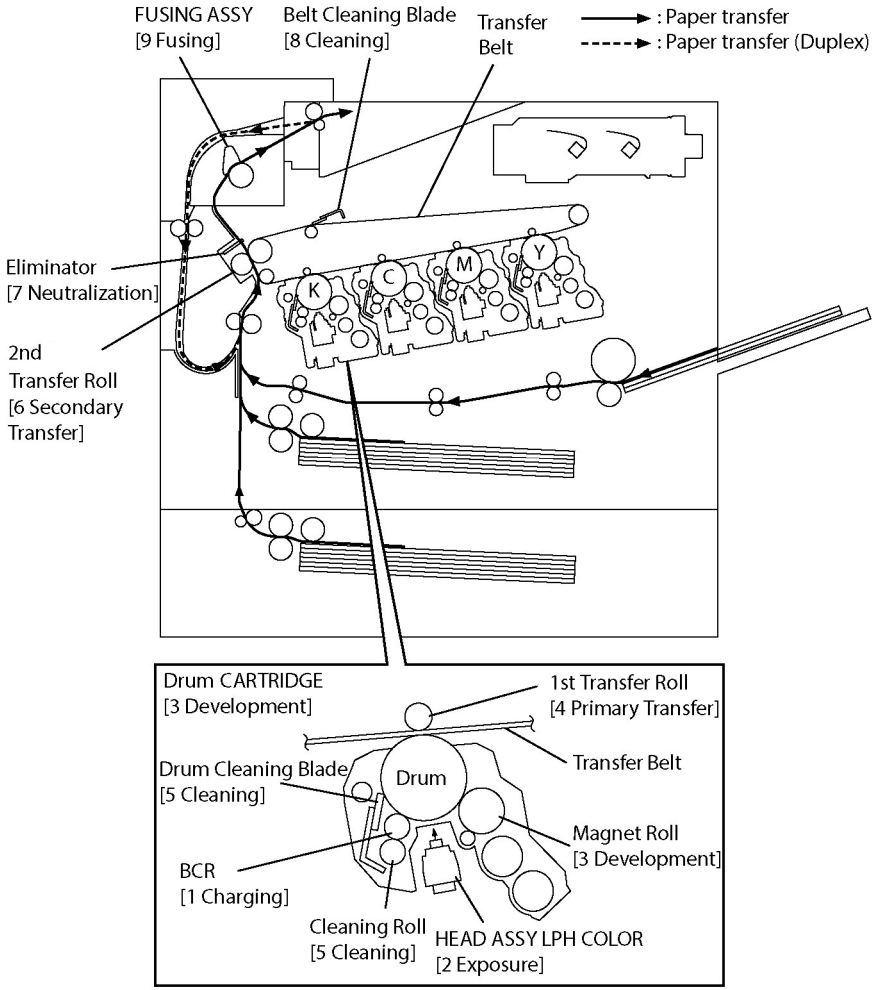

Figure 2 Printing Process Functions

Charging

In the charging process, the surface of the drum rotating at a constant speed is uniformly charged with negative polarity by the discharge from the Bias Charge Roll (BCR). This process is performed in parallel for yellow, magenta, cyan and black colors.

- Bias Charge Roll (BCR)

  The BCR is kept in contact with the drum and rotates following the rotations of the drum. The BCR is a conductive roll that uniformly and negatively charges the drum surface with the negative voltage applied by the HVPS.
- Drum

  The drum surface is uniformly and negatively charged with DC bias voltage.

  The drum surface consists of a photoreceptor (which is an insulator in the dark and a conductor in the light) backed with a conductor.
- Cleaning Roll

  The Cleaning Roll physically contacts the BCR to remove the toner from it.

Exposure

The Exposure process forms an invisible electrostatic latent image on the negatively charged drum surface by illuminating it with the Light Emitting Diodes (LEDs).

This process is performed in parallel for yellow, magenta, cyan, and black colors.

This device uses the LED Print Head (LPH) for the exposure process. The LPH consists of numerous illuminating points that are lined in the main scanning direction. The LPH of this device consists of 21 newly developed Self-Scanning* Light Emitting Diodes (SLEDs). With 506 illuminating points per SLED, the total number of illuminating points on 21 SLEDs amounts to 10626, achieving a high resolution of 1200 dpi in the main scanning direction. Utilizing the switching characteristics of the PNPN thyristor, makes the PN junction work as a light emitting diode to provide the scanning function.

The LEDs emit lights according to the printing data (image data) output from the printer controller, and the lights pass through the lenses to be converged onto the drum surface. The LEDs illuminate the points on the drum surface corresponding to the pixels (micro points composing characters or pictures) of the printing data. When the LEDs illuminate the drum surface, the illuminated area becomes conductive. This allows the negative charge on the drum surface to flow to the positive side and cancel the positive charge, lowering the potential on the drum surface. This low-potential area becomes the electrostatic latent image.

Development

The development process makes a visible image appear on the drum surface by electrically attracting toner particles to the electrostatic latent image.

This process is performed in parallel for yellow, magenta, cyan and black color independently.

Toner Dispensing

The toner in the TONER CARTRIDGE is fed into the Drum Cartridge by the Upper Auger and the Lower Auger driven by the MOTOR ASSY DISP as shown in Figure 3. The toner supplied from the TONER CARTRIDGE is fed toward the Drum Cartridge by the Upper Auger and the Lower Auger in the DISP ASSY and the paddle in the TONER CARTRIDGE driven by the MOTOR ASSY DISP.

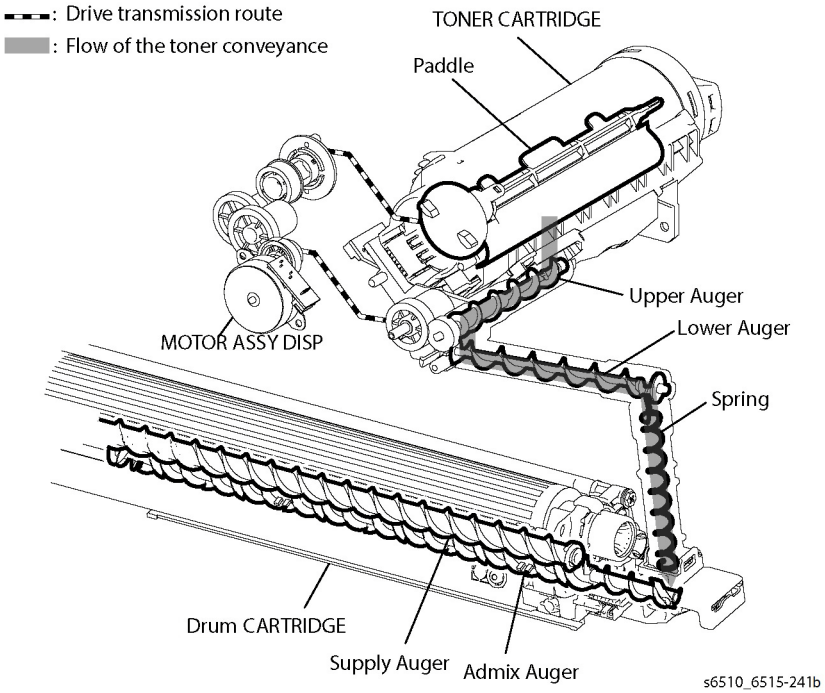

Figure 3 Toner Dispensing During Development

Development

In the developer section, the incoming toner is mixed with the existing developer (toner/carrier mixture) by the Admix Auger and the Supply Auger, and then supplied to the Magnet Roll located near the drum surface as shown in Figure 4. The toner and carrier are charged by friction due to agitation (toner in negative, carrier in positive), and they attract each other electrically. The carrier, due to its magnetic properties, is attracted to the Magnet Roll, and then uniformly leveled by the Trimmer Rod.

The Magnet Roll is covered by a thin semi-conductive sleeve all over the surface. The DB (Developing Bias) voltage is supplied to this semiconductor sleeve from the High Voltage Power Supply (HVPS). The DB voltage is negative DC voltage combined with AC voltage. The DC voltage keeps the Magnet Roll at a constant negative voltage against the photoreceptor layer of the drum. Therefore, at the area where the negative electric charge on the drum surface does not decrease, the potential is lower than that of the Magnet Roll, while the potential is higher than that of the Magnet Roll at the area where the negative charge on the drum surface decreases. The AC voltage shakes the developer on the surface of the Magnet Roll so that the toner easily flies to the drum. Thus, only the portions of the drum surface where the negative charge has decreased below that of the Magnet Roll (electrostatic latent image) attract the toner to form an image on the drum. Once the toner is deposited on the drum, the potential and the toner-attracting force of the corresponding portion decreases because the increase of negative charge lowers the potential at that portion.

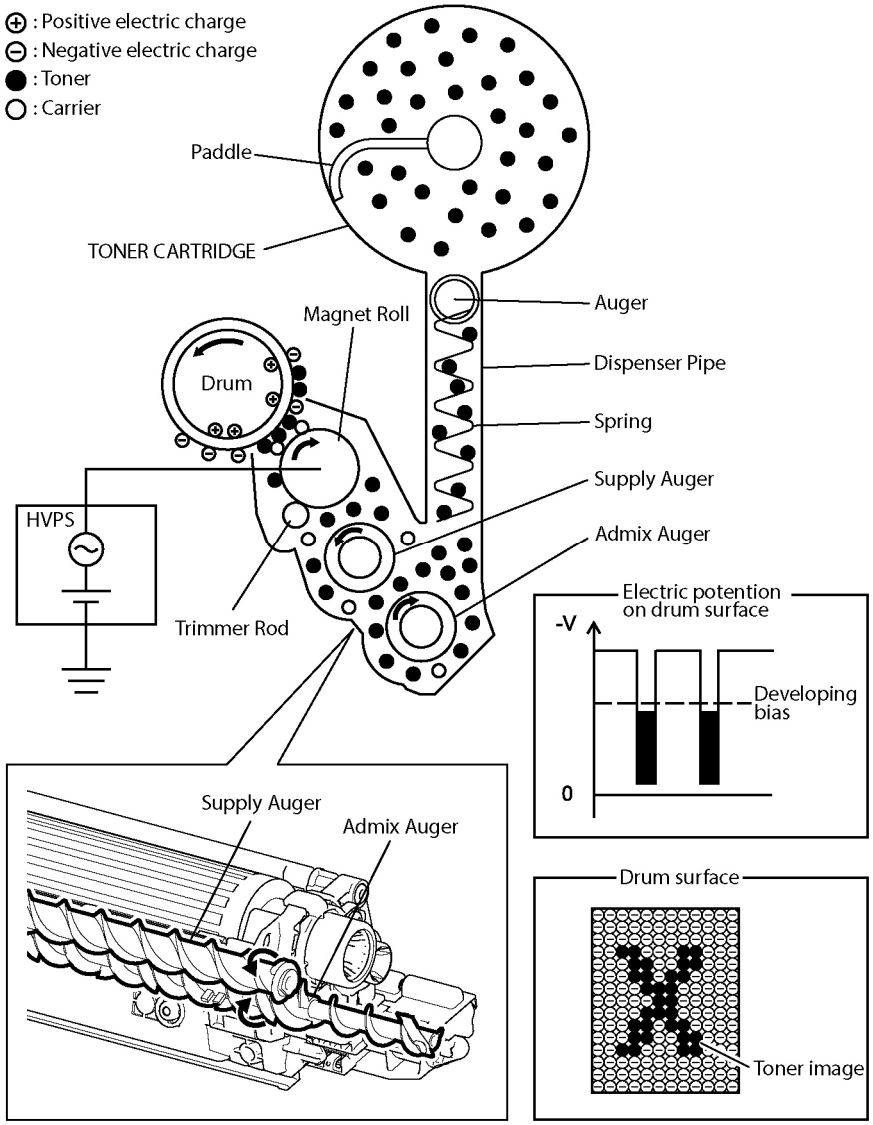

Figure 4 Development Process

Primary Transfer

In the Primary Transfer process, the toner images formed on the drums are transferred onto the Transfer Belt via the 1st Transfer Roller. The four color separation images are transferred from the drums onto the Transfer Belt in the order of Y, M, C, and K.

The 1st Transfer RollerTransfer Roller is a metal roll, to which the positive voltage from the High Voltage Power Supply (HVPS) is applied. The 1st Transfer Roller positively charges the backside of the Transfer Belt with the voltage generated by the contact resistance with the Transfer Belt. The toner images on the drums are transferred to the Transfer Belt due to the attracting force generated between the negative polarity of the toner image and the positive polarity on the Transfer Belt.

Cleaning (Drum)

In the Cleaning process, excess toner and charge is removed from the Drum and BCR surfaces.

Drum Cleaning

The excess toner that was not transferred to the Transfer Belt in the Primary Transfer process remains on the drum surface. To prevent the excess toner from causing troubles in the subsequent processes, the toner is scraped off by the Drum Cleaning Blade in contact with the drum surface, and then is collected into the Waste Cartridge.

BCR Cleaning

The remaining toner is roiled by the Cleaning Roll made of spongy material in contact with the BCR surface, and then collected to the Drum. The toner returned to the Drum is scraped off by the Drum Cleaning Blade with the transfer remaining toner in the drum cleaning process.

Secondary Transfer

In the Secondary Transfer process, the toner image completed on the surface of the Transfer Belt is transferred onto the print medium using the 2nd Transfer Roller. The print medium passes between the 2nd Transfer Roller and the Transfer Belt that runs in contact with the conductive roll (Back Up Roll). The toner image on the Transfer Belt moves onto the print medium due to the attracting force generated between the grounded Back Up Roll and the positively polarized 2nd Transfer Roller.

Neutralization

In the Neutralization process, the charge on the paper is neutralized or eliminated by the Eliminator. The charge is neutralized (removed) to prevent the toner on the paper from spreading over the surrounding metal surfaces. The Eliminator is a metal sheet that is held at the ground potential. The Eliminator is installed at several millimeters away from the backside of the Transfer Belt.

Cleaning (Transfer Belt, 2nd Transfer Roller)

In the Cleaning process, the toner and charge remaining on the Transfer Belt and the toner remaining on the 2nd Transfer Roller are removed after the toner image is transferred onto the print medium.

Belt Cleaning

The excess toner that was not transferred to the sheet in the Secondary Transfer process remains on the Transfer Belt surface. To prevent the excess toner from causing troubles in the subsequent processes, the toner is scraped off by the Cleaning Blade in contact with the Transfer Belt surface, and then is collected into the Waste Cartridge.

2nd Transfer Roller Cleaning

The excess toner deposited on the 2nd Transfer Roller in the Secondary Transfer process soils the backsides of the subsequent sheets. To prevent this trouble, the excess toner on the 2nd Transfer Roller is transferred back onto the Transfer Belt using the attracting force generated by the Back Up Roll which is positioned opposite to the 2nd Transfer Roller and is positively polarized by the DC voltage from the HVPS. The excess toner remaining on the Transfer Belt is scraped off by the Belt Cleaning Blade that is in contact with the Transfer Belt, and then is collected into the Waste Cartridge (see Waste Toner Collection).

Fusing

In the Fusing process, toner is fixed onto the print medium by heat and pressure. The toner particles are melted by the Heat Roll heated by the Heater Lamp, and fused onto the print medium by the pressure between the Heat Roll and the Pressure Belt. The Pressure Belt friction-driven by the Heat Roll nips the print media against the Heat Roll using the pressurizing mechanism it contains.

Waste Toner Collection

The excess toner generated by the Y/M/C/K drum cleaning is fed to the Waste Cartridge by the Drum Cleaning Auger in the Drum Cartridge of YMCK as shown Figure 5.

The excess toner generated by the belt cleaning is fed to the Waste Cartridge by the Belt Cleaning Auger in the Transfer Belt Unit.

The Drum Cleaning Auger (K) and the Belt Cleaning Auger are driven by the Main Motor and the Drum Cleaning Auger (Y/M/C) are driven by the Sub Motor.

The excess toner fed to the Waste Cartridge is collected into the cartridge by the Waste Auger in the Waste Cartridge.

The Waste Auger in the Waste Cartridge is driven by the Main Motor via the Regi Roll.

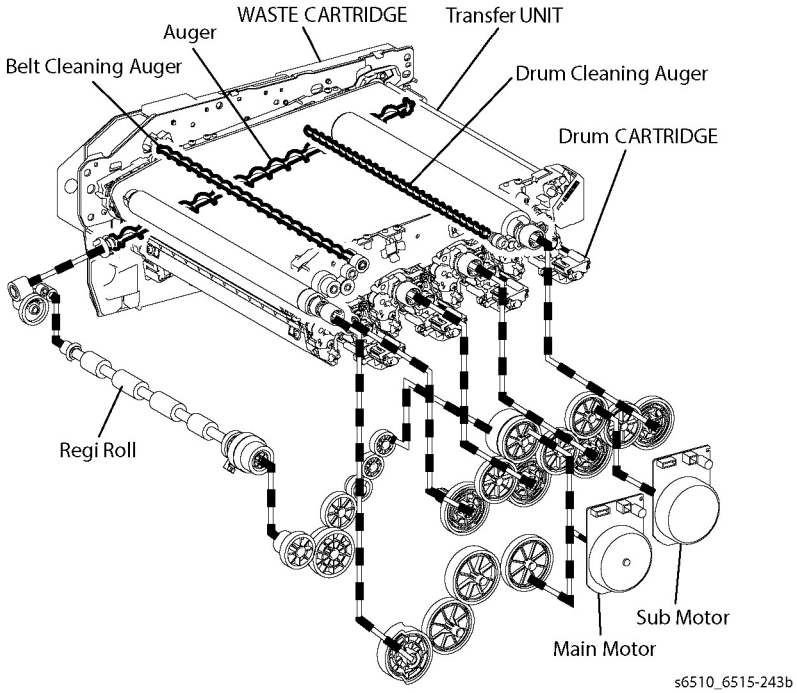

Figure 5 Waste Toner Collection

Scanning Process

Document Scanning

The SCANNER ASSY consists of the Image Input Terminal (IIT) and the Duplex Automatic Document Feeder (DADF). Document scanning is performed by the Carriage Assy in the Image Input Terminal.

Document Scanning at Platen (IIT)

The SCANNER ASSY, shown in Figure 1, consists of the Image Input Terminal (IIT) and the Auto Document Feeder (ADF). Document scanning is performed by the Carriage Assy in the Image Input Terminal.

The Carriage Assy consists of components such as the CCD Image Sensor for converting image to data, the LED Array for illuminating the original, and the Rod Scope for converting the original image to a full-size erect image.

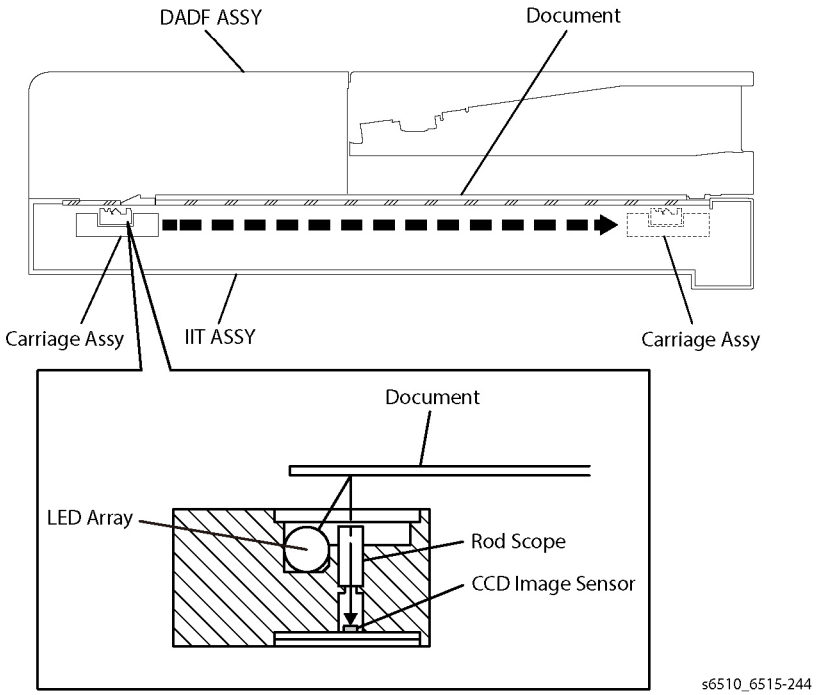

Figure 1 Scanning at Platen (IIT) Assembly

Document Scanning at DADF

This DADF, shown in Figure 2, has a different system from the conventional document feeder, being capable of scanning both the front and back sides of the document during the one-pass conveyance. The CCD Array Assy on the IIT ASSY reads the front side of the document, and the CIS Array Assy on the DADF ASSY reads the back side of the document. These two scanning parts are arranged so as to interpose the paper path from both sides, and this allows both sides of the document to be scanned without rotation.

When the document being fed by the torque from the DADF Motor at the speed corresponding to the set magnification passes the Scanner Home Position (CVT: Constant Velocity Transport) of the Carriage Assy in the IIT ASSY, allowing the reflected image to be read by the CCD Image Sensor.

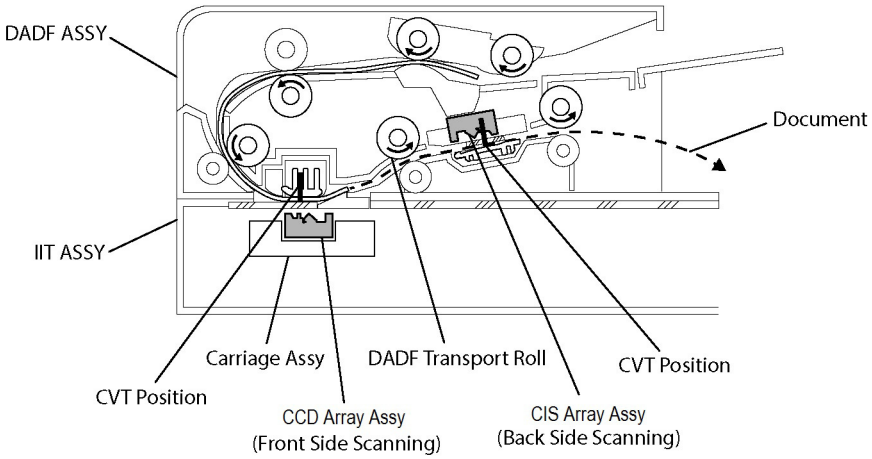

Figure 2 Scanning at DADF Assembly

Paper Path

This section describes the paper feed path of the entire device and the paper feed process in each feed section.

Paper Path Layout

Figure 1 shows the paper feed layout when the tray module is installed, and the components relevant to paper feed.

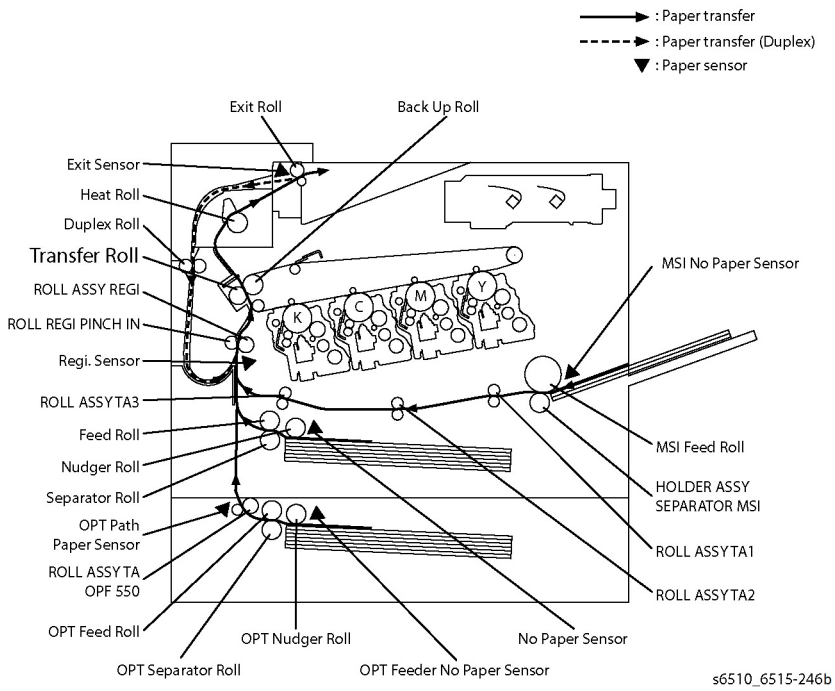

Figure 1 Paper Path Layout

Feeding from Paper Cassette

Figure 2 shows the paper loaded in the paper cassette is fed between the Feed Roll and the Separator Roll by the Nudger Roll, and fed farther to the registration section by the rotation of the Feed Roll and the Separator Roll.

- The Nudger Roll and the Feed Roll are rotated by the Main Motor via the CLUTCH ASSY PH.
- The Separator Roll, pressed from underneath by the spring pressure and forced against the Feed Roll, fans a sheet by the rotation friction.
- When the sheet is lapped over, the break force of the torque limiter combined with the Separator Roll separates and feeds only the top sheet.

- The PLATE ASSY BOTTOM is the mechanism driven with the gear located on the side of the paper cassette.
- Unless the interlock gear is unlocked, the PLATE ASSY BOTTOM keeps the state that it is not lowered or elevated from the arbitrary position. The sheet is fed at this position.
- As paper is fed and the stack of paper decreases by several sheets, the Nudger Roll lowers down and the lever unlocks the gear, which elevates the PLATE ASSY BOTTOM.

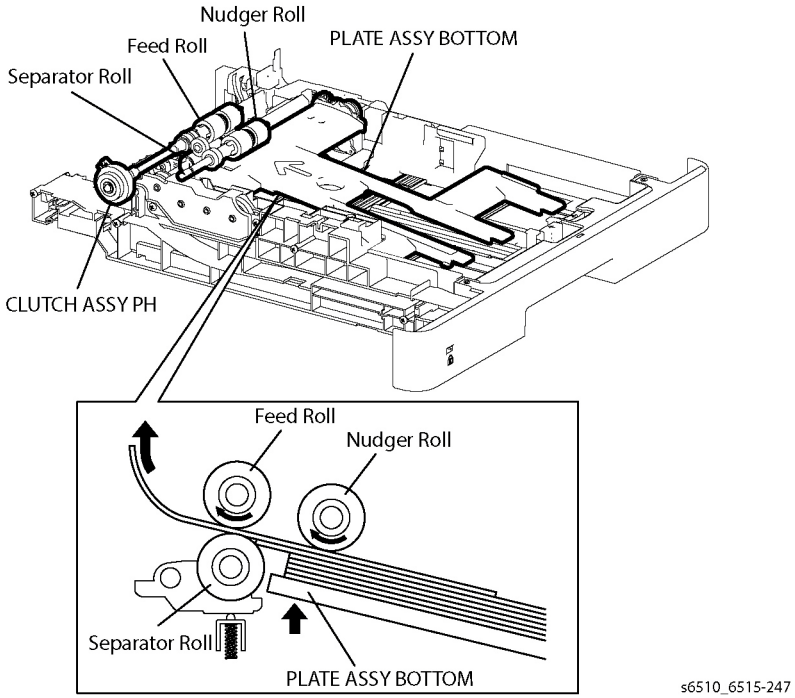

Figure 2 Feeding from Paper Cassette

Feeding from Bypass Tray

When sheet feeding from the MSI starts, the MSI Feed Roll rotates, driven by the Main Motor and controlled by the SOLENOID FEED MSI, to feed the sheet to the position where it is nipped between the MSI Feed Roll and the MSI Separator Roll (HOLDER ASSY SEPARATOR MSI). As the MSI Feed Roll rotates, the MSI Left Cam and MSI Right Cam also rotate to lift the PLATE ASSY BOTTOM MSI via the LATCH MSI L and LATCH MSI R to the position for sheet feeding. See Figure 3.

Normally, when only one sheet is fed, both the MSI Feed Roll and MSI Separator Roll rotate to allow the sheet to pass. However, when two sheets are fed concurrently, only the MSI Feed Roll rotates and the MSI Separator Roll is locked. This allows the upper sheet to pass by being separated from the lower sheet that is stopped by the friction with the MSI Separator Roll at rest.

The MSI Separator Roll is pushed toward the MSI Feed Roll by spring pressure, and controlled by the torque limiter (Clutch Assy Friction) with which it is coupled.

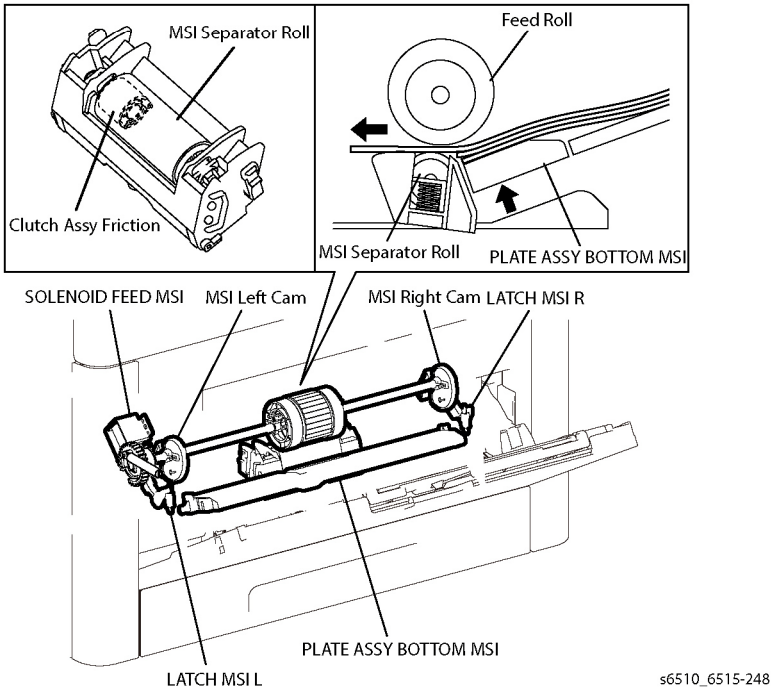

Figure 3 Feeding from the Bypass Tray

Feeding in the Registration Section

Feeding to the Registration Section

The sheet fed from the MSI is fed to the registration section by the ROLL ASSY TA1, ROLL ASSY TA2, and ROLL ASSY TA3 driven by the Main Motor. See Figure 4.

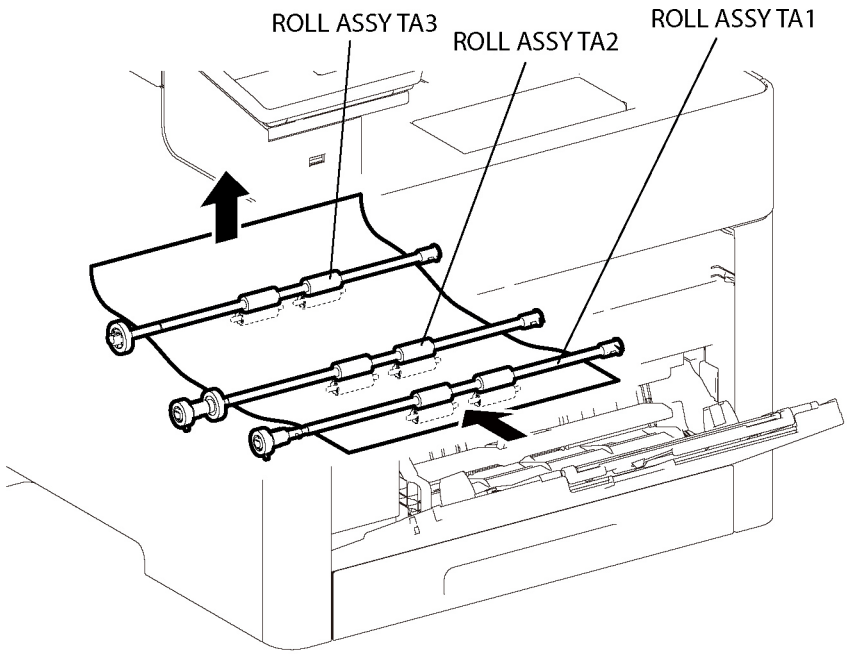

Figure 4 Feeding Through the Takeaway Rolls

The sheet fed from the paper cassette is passed through the chute directly and fed to the registration section. See Figure 5.

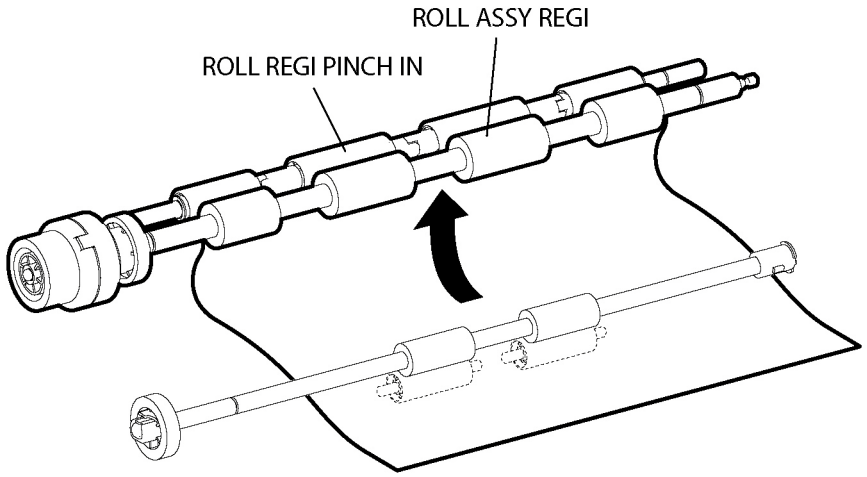

Figure 5 Feeding to the Registration Section

Lead-Edge Registration (Paper Skew Correction)

When a sheet fed out of the MSI or Tray directly reaches the toner transfer section, the toner image may not be transferred at the correct position on the sheet due to misalignment of lead edges in the MSI or Tray.

To avoid this problem, the lead edge position of the sheet needs to be corrected at the registration section before the sheet is forwarded to the toner transfer section.

By thrusting the edge of the sheet fed out of the MSI or Tray against the locked ROLL ASSY REGI, the sheet's lead edge position is corrected. See Figure 6.

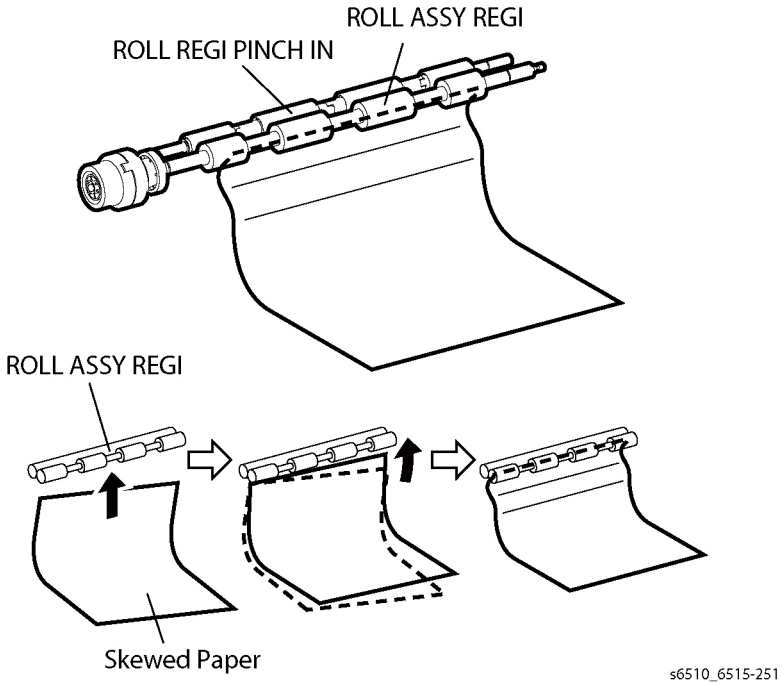

Figure 6 Sheet Leading Edge Position Correction

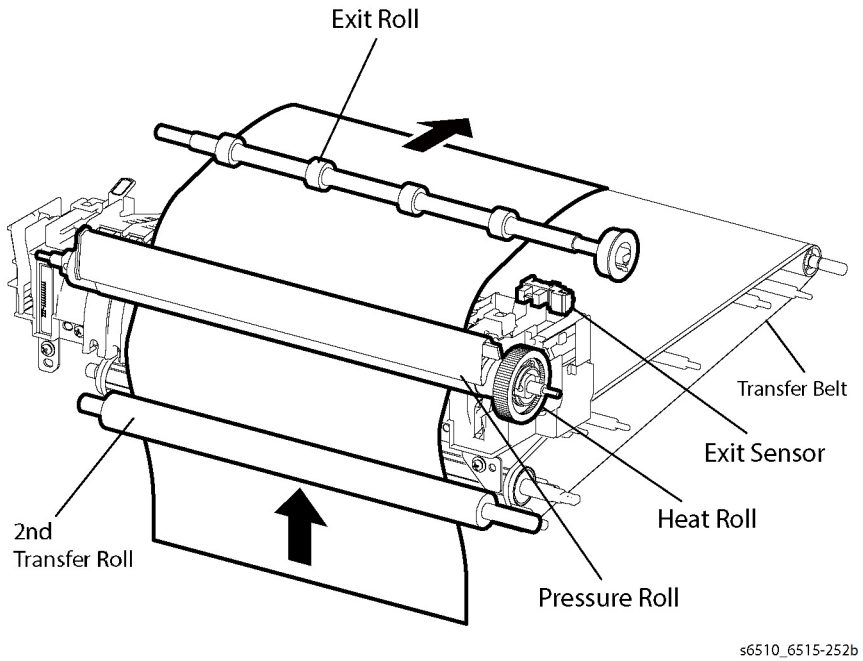

Figure 7 Feeding Through the Transfer/Fusing/Exit

Feeding from the Registration Section

The sheet is fed to the toner transfer section by the rotation of the ROLL ASSY REGI at the proper timing, after the lead edge position of the sheet fed is corrected in the registration section. The ROLL ASSY REGI is rotated by the Main Motor drive via the CLUTCH ASSY REGI.

Transfer / Fusing / Exit

On the sheet passed through the registration section, the toner image on the Transfer Belt is transferred by the Transfer Belt and the 2nd Transfer Roller rotated by the Main Motor drive. Then, the sheet is fed to the exit section while its toner image is being fused by the Heat Roll rotated by the Main Motor. See Figure 7. Also, the Main Motor drive is transmitted to the Exit Clutch, and the Exit Roll is rotated in the sheet exit direction. The printed sheet is ejected from the printer. The Exit Sensor detects when the sheet completely exits the printer.

Feeding Through the Duplexer

After the sheet is passed through the Heat Roll and side 1 printing is completed, the rotation direction of the Exit Roll is changed to the duplex feed direction at the proper timing, and the sheet is nipped in the Duplex Assembly. See Figure 8. When the Main Motor drive is transferred to the Exit Clutch 2, the Exit Roll is rotated in the duplex direction. Also, the Duplex Roll is rotated by the Main Motor drive, and the sheet is fed to the registration position.

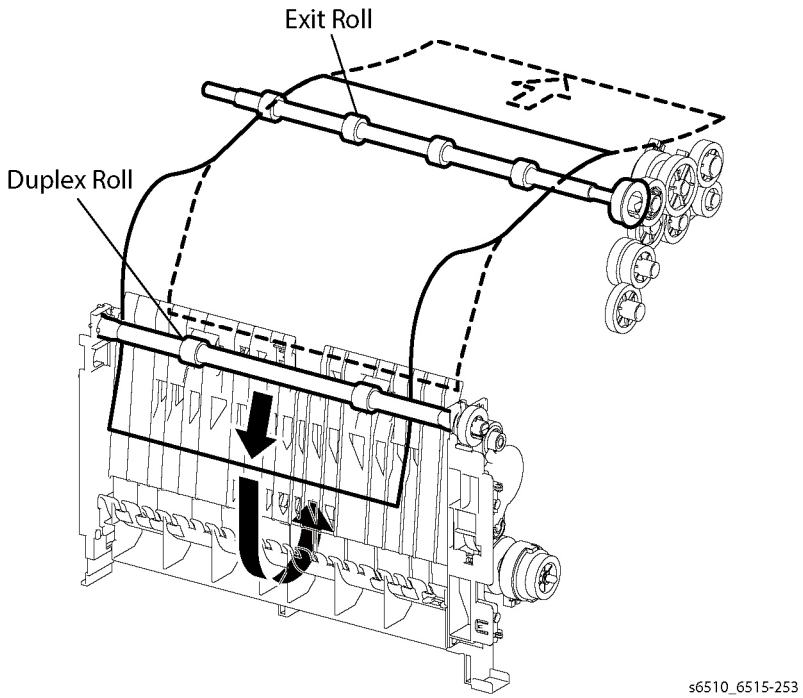

Figure 8 Feeding Through the Duplexer

DADF Paper Path (MFP)

When the sheet feeding from the Document Feeder Tray of the DADF starts, the DADF Nudger Roll and the DADF Feed Roll rotation is driven by the DADF Motor. The sheet is nipped between the DADF Feed Roll and the Retard Pad while being fed into the DADF. See Figure 9.

Inside the DADF, the sheet is fed by the DADF Takeaway Roll rotated by the DADF Motor, aligned by the DADF Regi Roll rotated by the DADF Motor, and fed to the Scanner Home (CVT: Constant Velocity Transport) Position in the Carriage Assy, and is scanned (Simplex). Then, the sheet is fed by the DADF Transport Roll rotated by the DADF Motor to the CVT position, and is scanned (Duplex).

After being scanned, the sheet is ejected by the DADF Exit Roll rotated by the DADF Motor to the DADF's Document Output Tray.

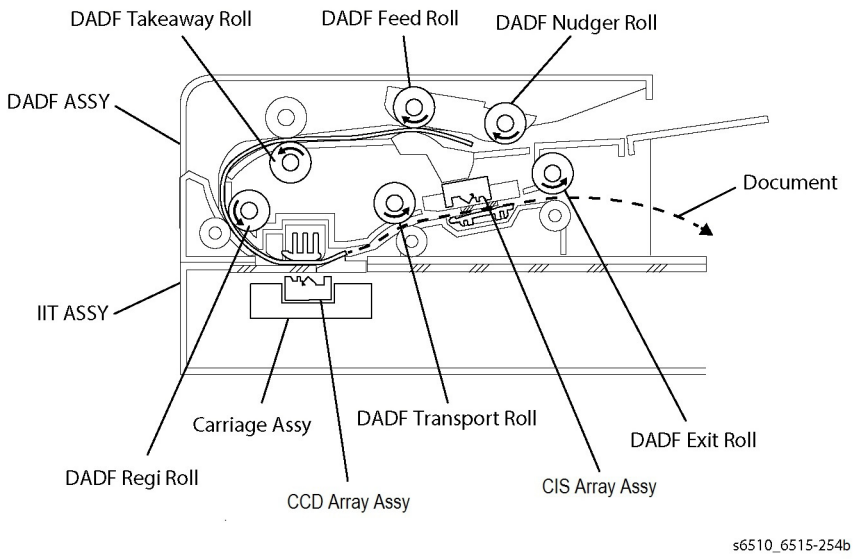

Figure 9 Feeding Through the DADF

Major Components' Functions

This section describes the major functional components of the printer and the scanner with corresponding illustrations. These components are classified into the following blocks based on the printer and scanner configurations.

LPH

Figure 1 shows the LPH assemblies.

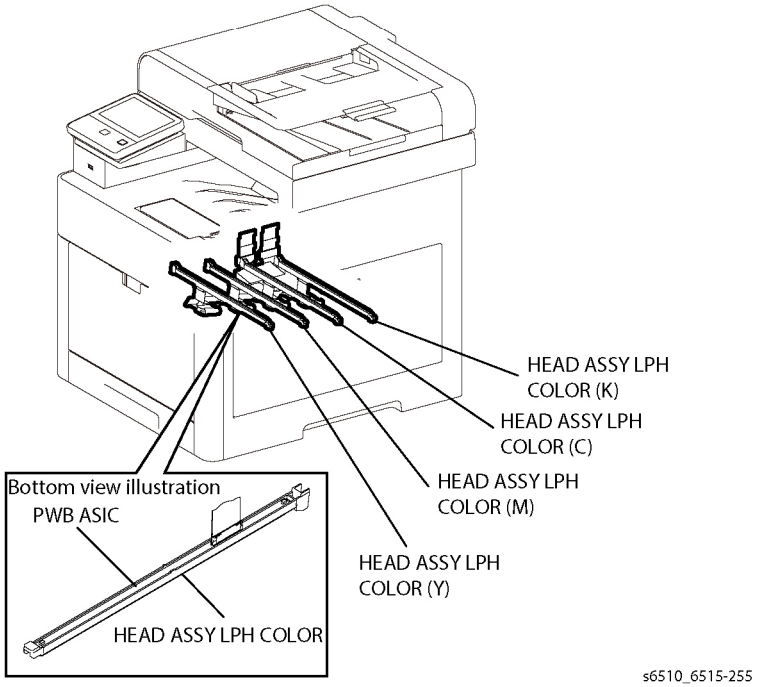

Figure 1 LPH Function

HEAD ASSY LPH COLOR (PL 2.1 Item 1)

An exposure device for creating an electrostatic latent image on the drum surface. One unit is provided for each color: yellow, magenta, cyan, and black.

The HEAD ASSY LPH COLOR mainly consists of the following part:

- PWB ASIC

  A board that bridges between the PWBA ESS MFP/PWBA ESS SFP and the HEAD ASSY LPH COLOR.

Drive

Figure 2 shows the drive assemblies.

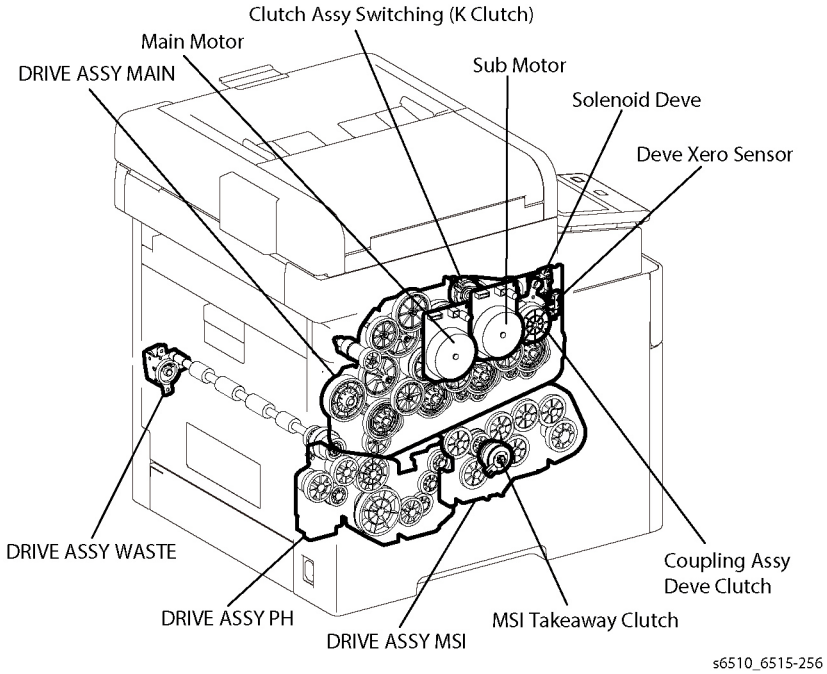

Figure 2 Drive Function

DRIVE ASSY MAIN (PL 3.1 Item 1)

The DRIVE ASSY MAIN mainly consists of the following parts:

- Main Motor

  The DC motor that drives the Heat Roll in the Fuser ASSY, the Exit Roll in the exit section, each roller of the paper feed section (feed from the MSI/tray, registration, and duplex feed), the Drum and Magnet Roll in the Drum Cartridge (K) (black), the Transfer Belt and Belt Cleaning Auger in the Transfer Belt Unit, and the Auger in the Waste Cartridge.
- Sub Motor

  The DC motor that drives the Drum and Magnet Roll in the Drum Cartridge (Y/M/C) (Yellow/Magenta/Cyan).
- Development Coupling Clutch Assembly

  Transfers the drive from the Sub Motor to the Drum and Magnet Roll in the Drum Cartridge (Y/M/C) (Yellow/Magenta/Cyan). This clutch is controlled by the Solenoid Deve and Deve Xero Sensor.
- Switching Clutch Assembly (K Clutch)

  Transfers the drive from the Main Motor to the Switching Camshaft in the Transfer Belt Unit and switches the contact/retract of the 1st Transfer Roller.

DRIVE ASSY PH (PL 3.1 Item 2)

Transfers the drive to the DRIVE ASSY WASTE via the ROLL ASSY REGI.

DRIVE ASSY MSI (PL 3.1 Item 3)

The DRIVE ASSY PH mainly consists of the following part:

- MSI Takeaway Clutch

  Transfers the drive from the Main Motor to the ROLL ASSY TA1, the ROLL ASSY TA2, and the ROLL ASSY TA3.

Air Flow

Figure 3 shows the Main Fan.

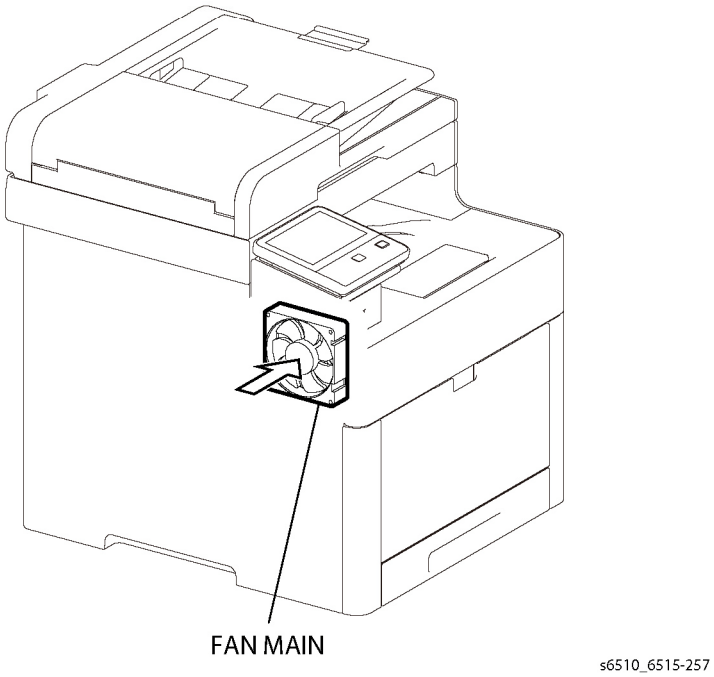

Figure 3 Air Flow

FAN MAIN (PL 4.1 Item 1)

Takes air in from outside the machine, and prevents temperature rise inside the machine.

Waste Toner Collection

Figure 4 shows the Waste Cartridge.

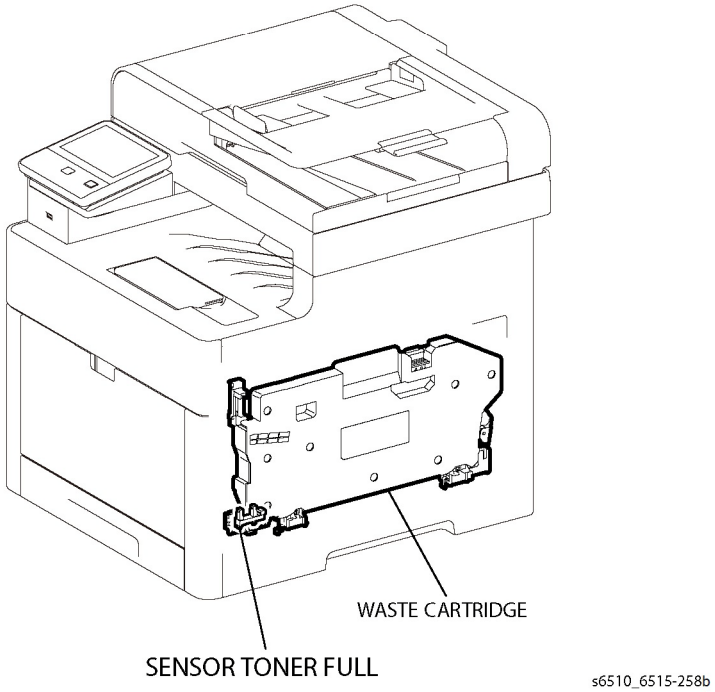

Figure 4 Waste Toner Function

SENSOR TONER FULL (PL 5.1 Item 9)

Detects when the Waste Cartridge is full.

Waste Cartridge (PL 8.1 Item 5)

Stores the waste toner conveyed from the Transfer Belt and the Drum Cartridge (Y/M/C/K) via the Belt Cleaning Auger and the Drum Cleaning Auger.

Toner Dispensing

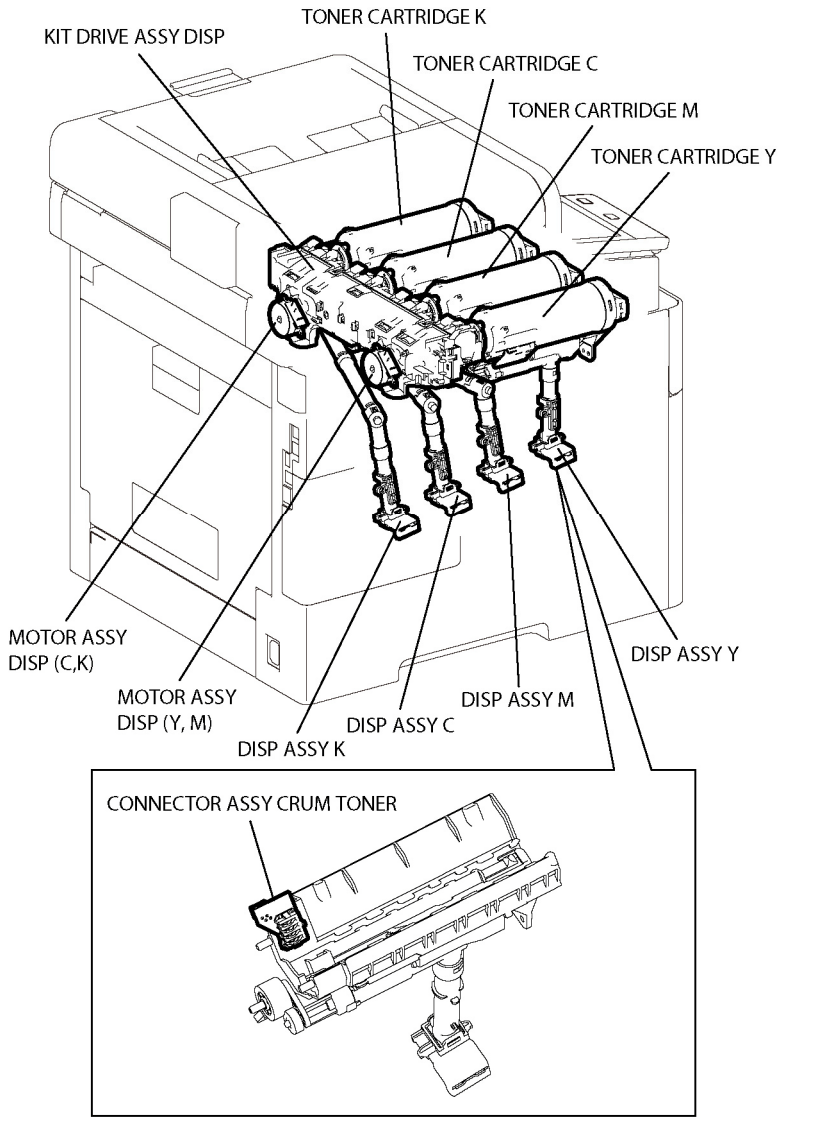

s6510_6515-259

Figure 5 Toner Dispensing Function

KIT DRIVE ASSY DISP (PL 5.1 Item 99)

Drives the paddle in the TONER CARTRIDGE, the Upper Auger, and the Lower Auger of the DISP ASSY, feeding toner to the development section in the Drum Cartridge.

The Dispenser Drive Assembly mainly consists of the following parts:

- Dispenser Motor Assembly (Y,M)

  Drives the TONER CARTRIDGE for the Y toner and M toner and the DISP ASSY via the gear.
- Dispenser Motor Assembly (C,K)

  Drives the TONER CARTRIDGE for the C toner and K toner and the DISP ASSY via the gear.

TONER CARTRIDGE Y,M,C,K (PL 5.1 Item 11, PL 5.1 Item 12, PL 5.1 Item 13, PL 5.1 Item 14)

Stores toner and a small amount of carriers. Also, includes the CRUM, a non-volatile memory to store the machine information.

DISP ASSY Y,M,C,K (PL 5.1 Item 2, PL 5.1 Item 3, PL 5.1 Item 4, PL 5.1 Item 5)

Feeds toner in the TONER CARTRIDGE to the Drum Cartridge.

The DISP ASSY Y/M/C/K mainly consists of the following parts:

- CONNECTOR ASSY CRUM TONER

  Detects whether the TONER CARTRIDGE being connected is a regular part.

Xerographics and Transfer

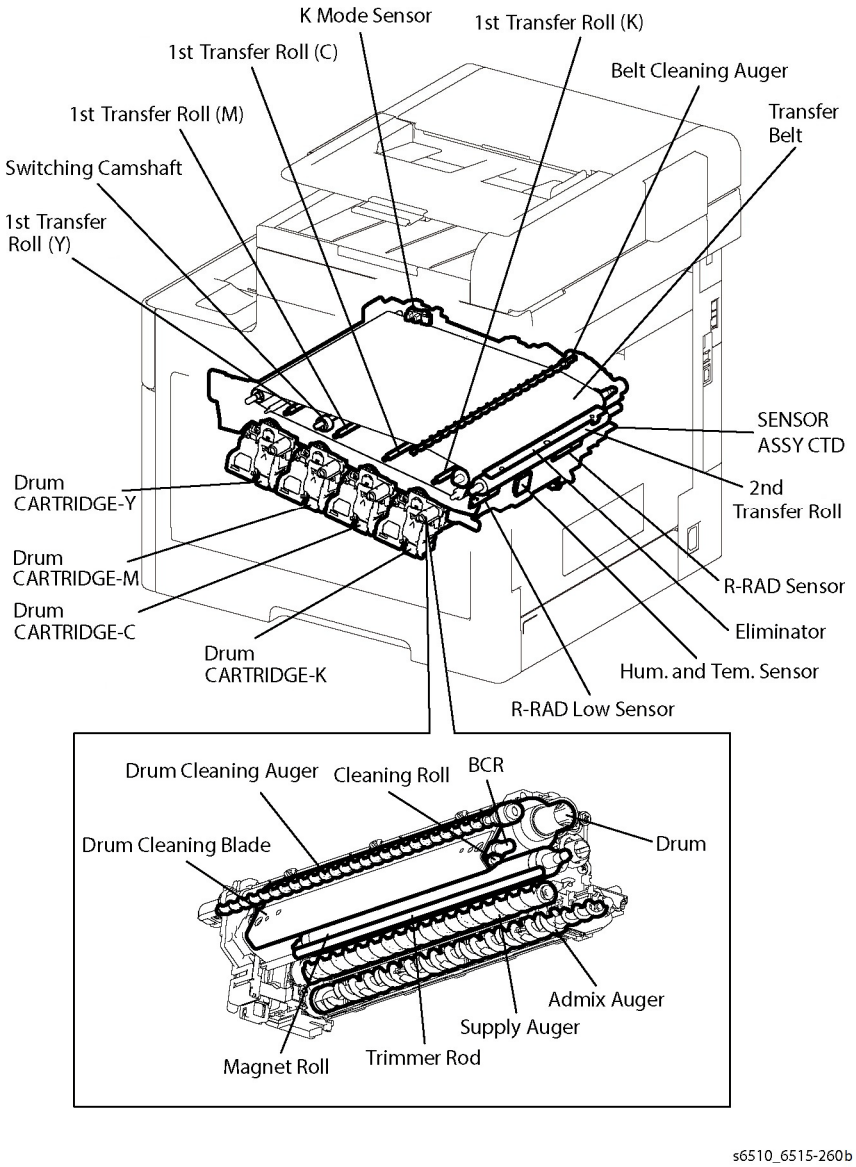

Figure 6 Xerographics Function

SENSOR ASSY CTD (PL 6.1 Item 8)

The CTD Sensor Assembly consists of the following parts:

- R-RAD Low Sensor

  Irradiates light from the LED in the sensor to the Transfer Belt and the toner patch on the Transfer Belt, detects the reflected light from the Transfer Belt with the light receiving element, and outputs the electric signal. The output value is used to control the image position.
- R-RAD Sensor

  Irradiates light from the LED in the sensor to the Transfer Belt and the toner patch on the Transfer Belt, detects the reflected light from the Transfer Belt with the light receiving element, and outputs the electric signal. The output value is used to control the toner density, the image density, and the image position.
- Humidity and Temperature Sensor

  Detects the humidity and the temperature.

Drum Cartridge (Y,M,C,K) (PL 8.1 Item 1, PL 8.1 Item 2, PL 8.1 Item 3, PL 8.1 Item 4)

A unit that consists of the Drum to form the static latent image and toner image, and the developer to develop toner to the Drum. Placed in yellow, magenta, cyan, and black color each.

- Drum

  Forms the static latent image and the toner image.
- BCR

  Charges the Drum.
- Cleaning Roll

  Cleans toner on the BCR surface.
- Drum Cleaning Blade

  Cleans the remaining toner in the Drum after the toner image is transferred on the sheet.
- Magnet Roll

  Contacts with the Drum and forms the toner image on the Drum.
- Admix Auger, Supply Auger

  Stirs toner.
- Trimmer Rod

  Equalizes toner and carriers on the Magnet Roll.

Transfer Belt Unit (PL 6.1 Item 1)

The primary transfer unit that transfers the toner image on the drum surface of each color to the Transfer Belt.

The Transfer Belt mainly consists of the following components:

- 1st Transfer Roller (Y)/(M)/(C)/(K)

  Impresses the positive electric charge on the reverse side of the Transfer Belt in printing, and transfers the toner image formed in the Drum to the Transfer Belt.
- Transfer Belt

  Reduplicates and transfers the toner image formed in the Drums of each color.
- Back Up Roll

  Contacts with the 2nd Transfer Roller via the Transfer Belt in the secondary transfer, and transfers the toner image on the Transfer Belt to the sheet.

- Belt Cleaning Auger

  After the toner image is transferred on the sheet, cleans the remaining toner in the Transfer Belt.
- Switching Camshaft

  Switches the contact/retract of the 1st Transfer Roller (Y)/(M)/(C) to the Transfer Belt.
- K Mode Sensor

  Detects the contact/retract of the 1st Transfer Roller (Y)/(M)/(C) to the Transfer Belt.

2nd Transfer Roller Assy (PL 19.2 Item 11 MFP, PL 19.4 Item 11 SFP)

The 2nd Transfer Roller Assy mainly consists of the following components:

- 2nd Transfer Roller

  Contacts with the reverse side of the toner transfer face on the sheet, and transfers the toner image formed in the Transfer Belt to the sheet.
- Eliminator

  Neutralizes the sheet.

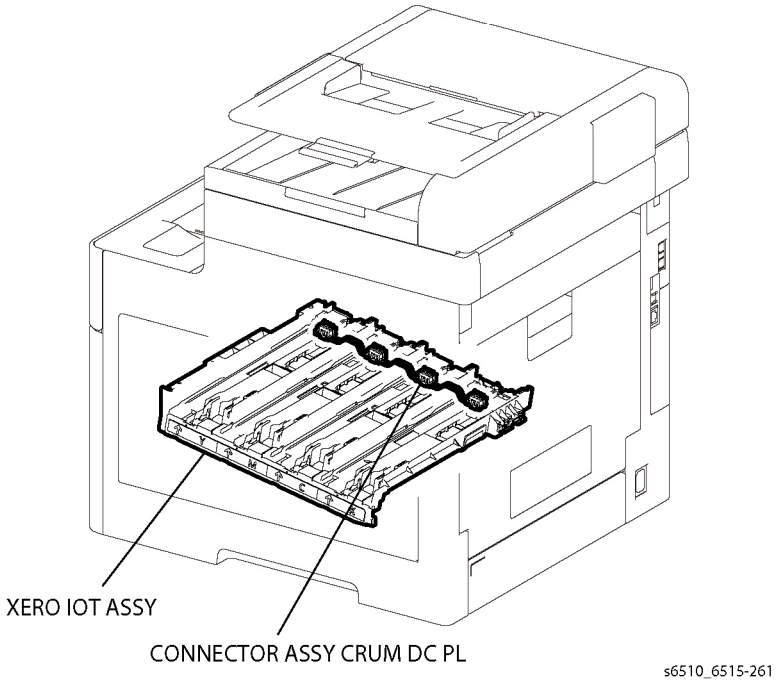

Figure 7 Xerographics Transfer Function

XERO IOT ASSY

The XERO IOT ASSY mainly consists of the following parts:

- CONNECTOR ASSY CRUM DC PL

  Detects whether the Drum Cartridge (Y/M/C/K) is set to the XERO IOT ASSY

Fuser

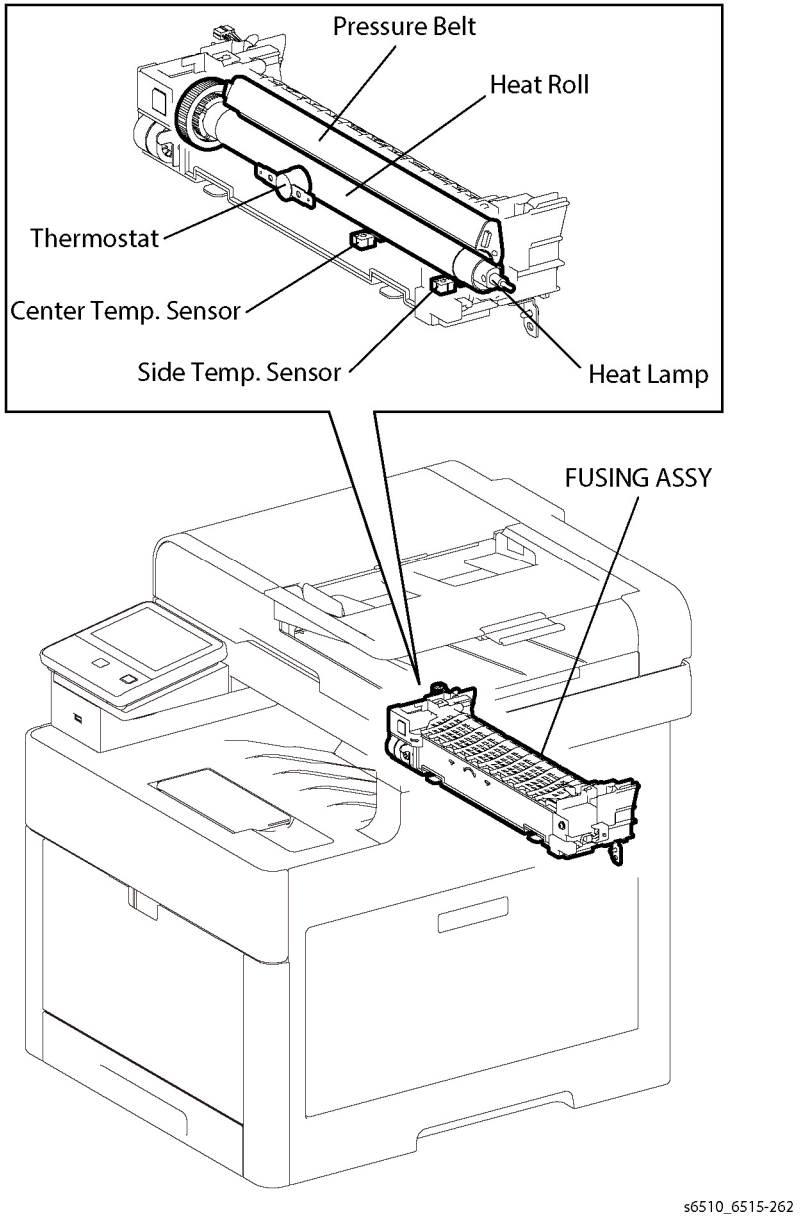

Figure 8 Fuser Function

Fuser ASSY (PL 7.1 Item 1)

The Fuser ASSY is a unit that fuses the complete toner image transferred on the sheet with the sheet by heat and pressure.

The Fuser ASSY mainly consists of the following components:

- Heat Roll

  A metal roller, with a surface for transferring heat to fuse toner on a sheet covered by the tube.
- Pressure Belt

  A belt contained the pressurization system inside. Combined with the Heat Roll, impresses toner on the sheet.
- Heater Lamp

  A heating element sealed inside the Heat Roll.
- Center Temp. Sensor

  A thermistor that reacts corresponding to temperature changes, located in the Heat Roll. The sensor detects the Heat Roll's surface temperature, preventing abnormally high temperature.
- Side Temp. Sensor

  A thermistor that reacts corresponding to temperature changes, located in the Heat Roll. The sensor detects the Heat Roll's surface temperature, preventing abnormally high temperature.
- Thermostat

  Located in series with the Heater Lamp's power source. A secondary device to prevent excessive temperature in the Heat Roll if the Temp. Sensors fail.

Paper Transport

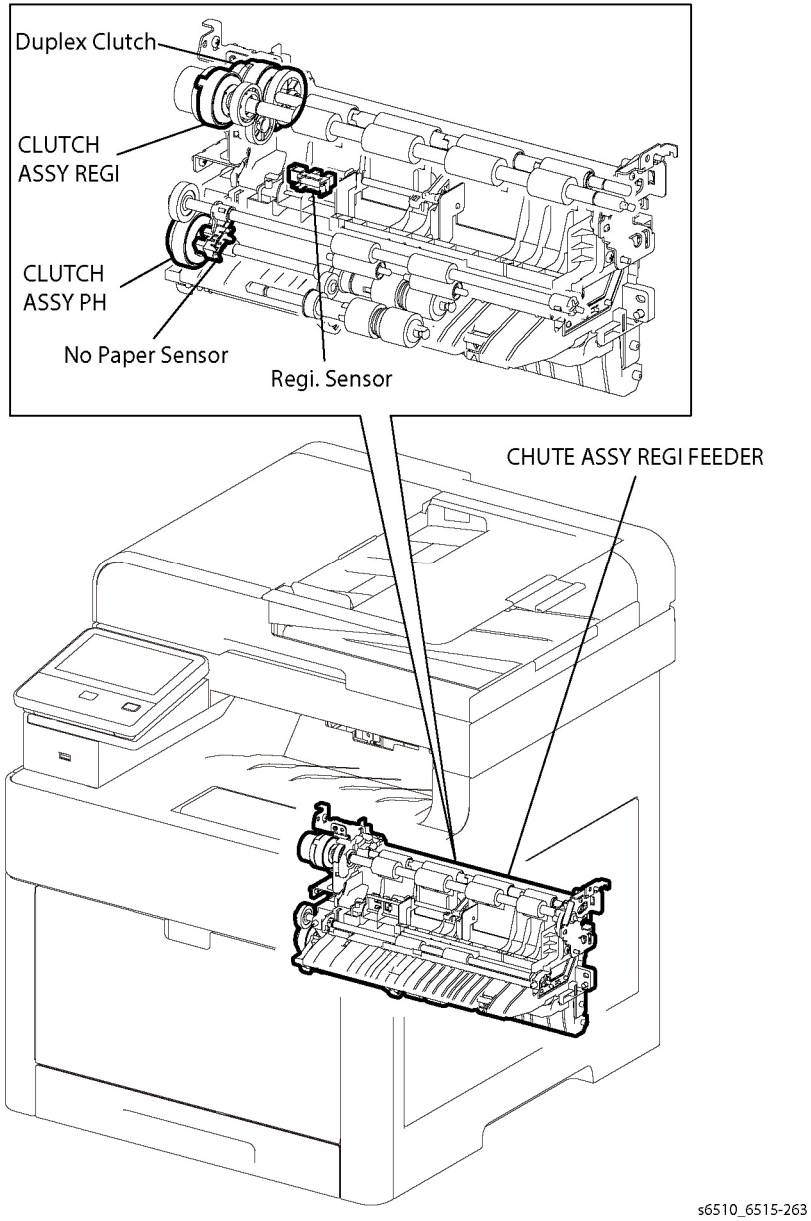

Figure 9 Paper Transport Function

CLUTCH ASSY REGI (PL 15.1 Item 8)

Transfers the Main Motor drive to the ROLL ASSY REGI.

CHUTE ASSY REGI FEEDER (PL 15.2 Item 1)

The CHUTE ASSY REGI FEEDER mainly consists of the following components:

- No Paper Sensor
  By change of the actuator, detects presence or absence of paper in the paper cassette.
- Registration Sensor
  Detects that a lead edge of a sheet reached the registration section.

CLUTCH ASSY PH (PL 15.2 Item 15)

Transfers the Main Motor drive to the Feed Roll.

Duplex Clutch

Transfers the Main Motor drive to the Duplex Roll inside the Duplex Assembly.

Bypass

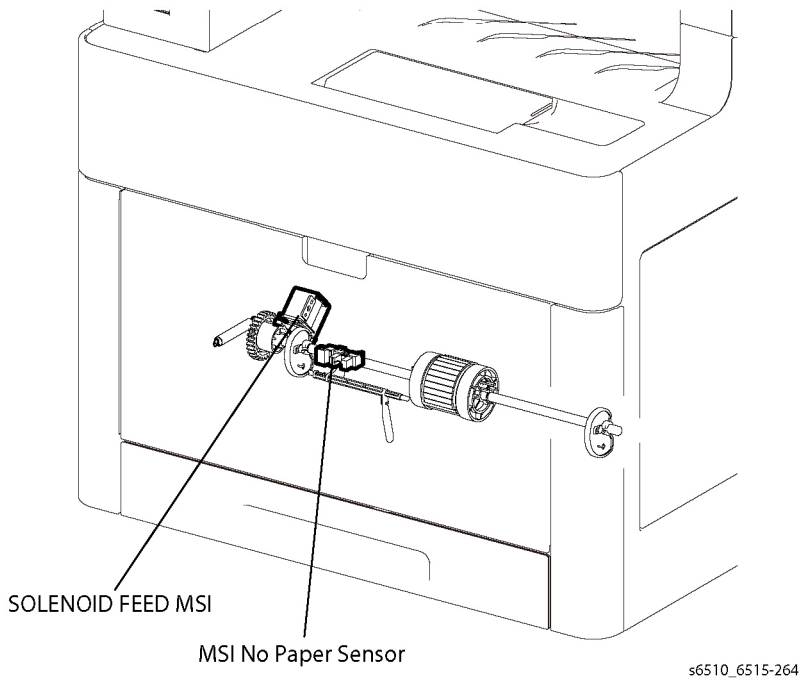

Figure 10 Bypass Function

MSI No Paper Sensor

Actuator movement indicates presence or absence of paper in the MSI.

SOLENOID FEED MSI (PL 13.1 Item 7)

Transfers the Main Motor drive to the MSI Feed Roll.

Exit

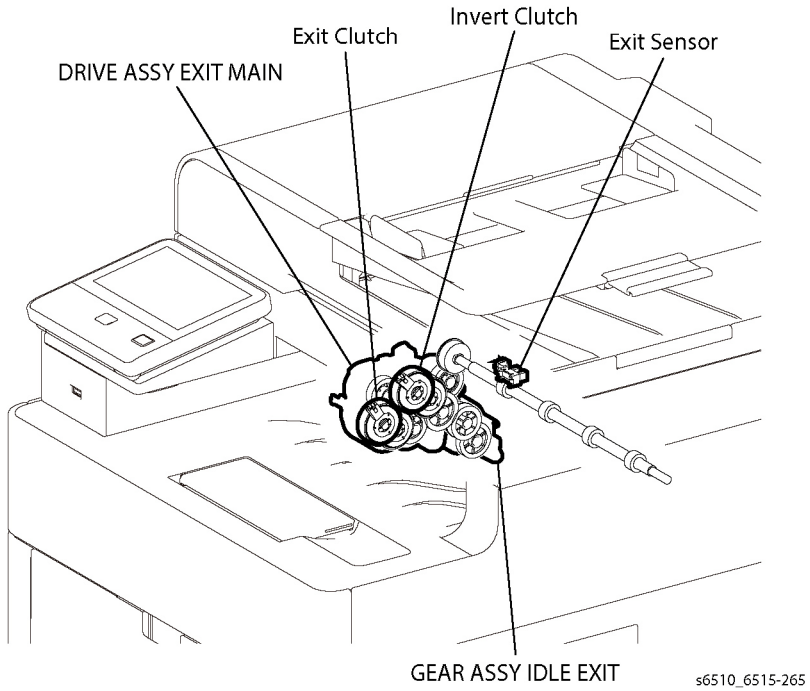

Figure 11 Exit Function

Exit Sensor

Detects a sheet as it passes out of the Fuser unit.

DRIVE ASSY EXIT MAIN (PL 17.1 Item 4)

The Main Exit Drive mainly consists of the following components.

- Exit Clutch
  Transfers the Main Motor drive to the Exit Roll. The Exit Roll rotates in the paper exit direction.
- Invert Clutch
  Transfers the Main Motor drive to the Exit Roll. The Exit Roll rotates in the duplex feed direction.

GEAR ASSY IDLE EXIT (PL 17.1 Item 5)

Contains the gears that transmit the Main Motor drive to the gears in the DRIVE ASSY EXIT MAIN.

Electrical (MFP)

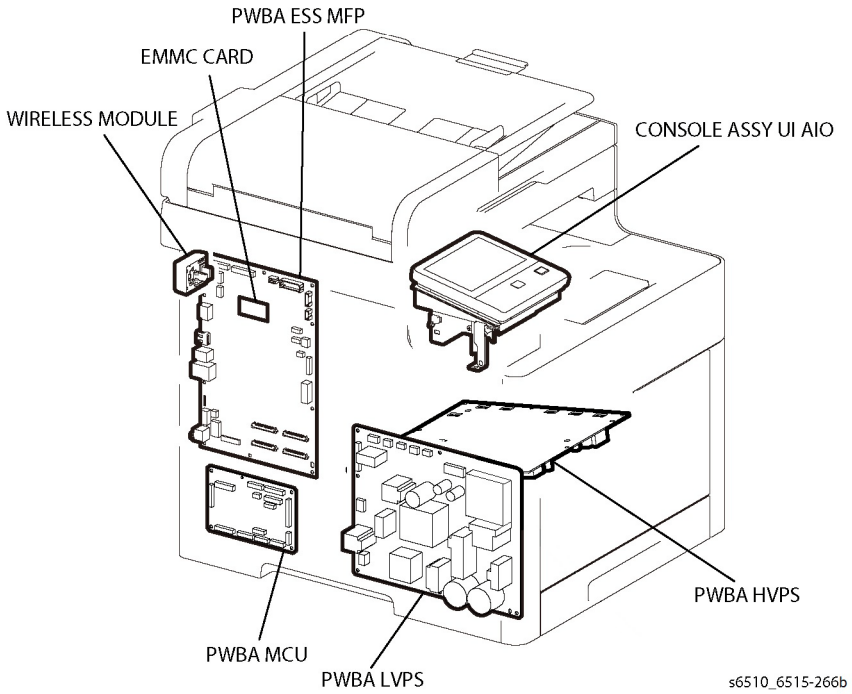

Figure 12 MFP Electrical Function

CONSOLE ASSY UI (MFP) (PL 1.1 Item 1)

Consists of the LCD, LED, and the buttons. Displays the status of the machine on the LCD and LED, and controls the machine using the buttons.

PWBA MCU (PL 18.1 Item 1)

Performs communication with the printer controller and controls each component in printing.

PWBA ESS MFP (PL 18.1 Item 5)

A printer controller. Controls printing by communicating with the PWBA MCU, HEAD ASSY LPH COLOR, and CONSOLE ASSY UI AIO.

PWBA LVPS (PL 18.1 Item 16)

Generates the +24VDC and +5VDC from the AC power source to provide power for each component.

PWBA HVPS (PL 18.2 Item 2)

Provides high voltage to the 1st Transfer Roller contained in the Transfer Belt Unit, and the Magnet Roll and BCR contained in the Drum Cartridge for each color.

WIRELESS MODULE (PL 18.1 Item 11)

Controls the Wireless Network interface.

EMMC BOARD (PL 18.1 Item 30)

Non-volatile memory that stores the machine information.

Electrical (SFP)

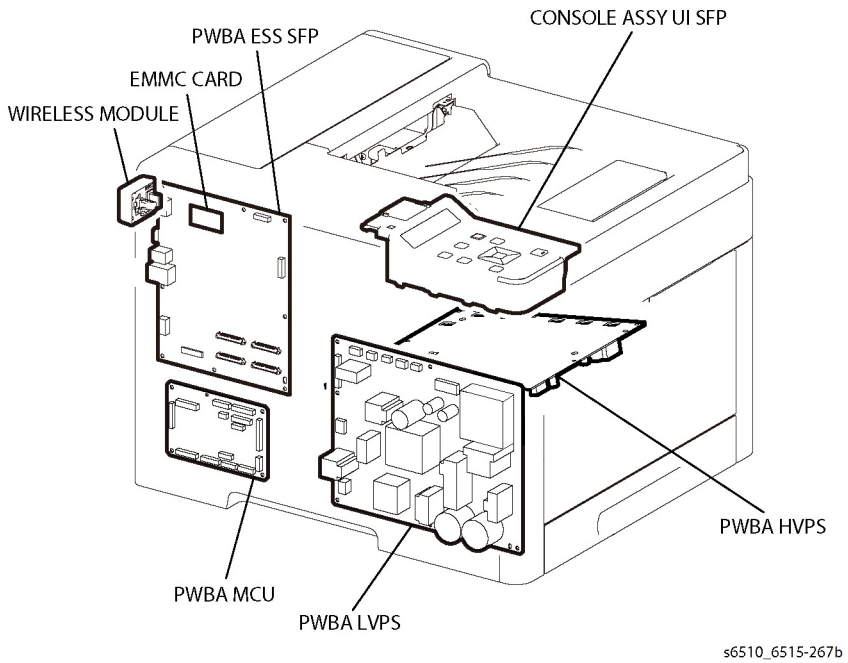

Figure 13 SFP Electrical Function

CONSOLE ASSY UI (SFP) (PL 1.2 Item 1)

Consists of the LCD, LED, and the buttons. Displays the status of the machine on the LCD and LED, and controls the machine using the buttons.

PWBA MCU (PL 18.5 Item 1)

Communicates with the printer controller and controls each component during printing.

PWBA ESS SFP (PL 18.5 Item 5)

A printer controller. Controls printing by communicating with the PWBA MCU, HEAD ASSY LPH COLOR, and CONSOLE ASSY UI SFP.

PWBA LVPS PL 18.5 Item 16

Generates the +24VDC and +5VDC from the AC power source to provide power for each component.

PWBA HVPS PL 18.6 Item 2

Provides high voltage to the 1st Transfer Roller contained in the Transfer Belt Unit, and the Magnet Roll and BCR contained in the Drum Cartridge for each color.

WIRELESS MODULE PL 18.5 Item 11

Controls the Wireless Network interface.

EMMC BOARD PL 18.5 Item 30

Non-volatile memory that stores the machine information.

Interlock

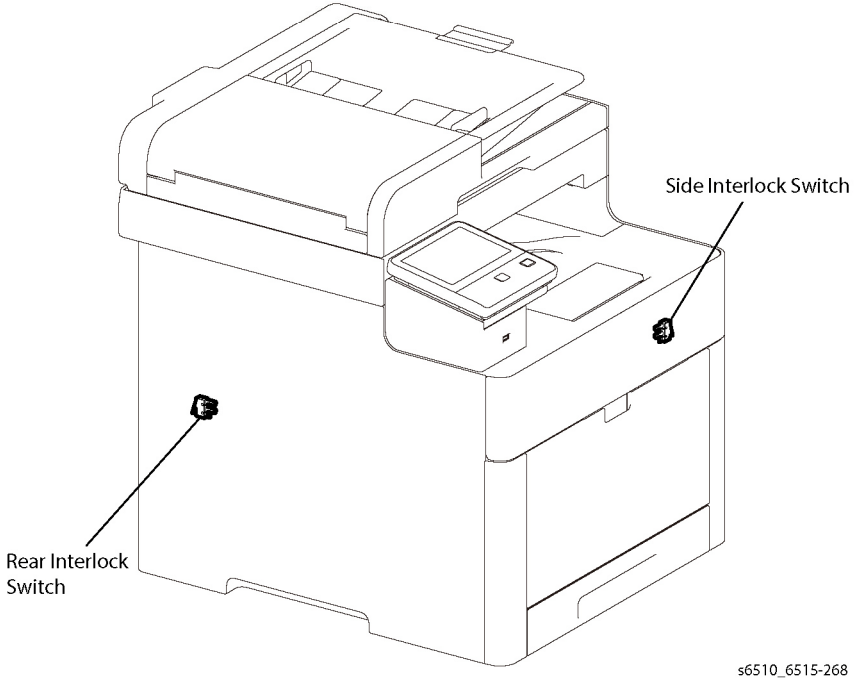

Figure 14 Interlock Function

Rear Interlock Switch

Detects the opening/closing of the rear cover.

Side Interlock Switch

Detects the opening/closing of the side cover.

UI and FAX

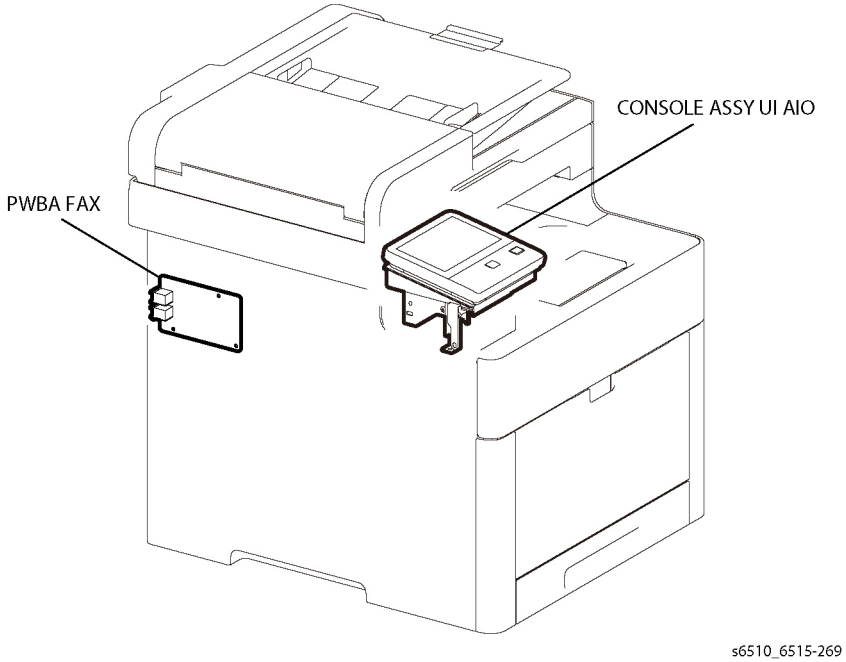

Figure 15 UI and FAX Function

CONSOLE ASSY UI (MFP) PL 1.1 Item 1

The CONSOLE ASSY UI AIO displays the state of the printer and FAX using the LCD and LED, and operates the printer and FAX using the buttons.

PWBA FAX PL 18.1 Item 9

The board for controlling the FAX signal.

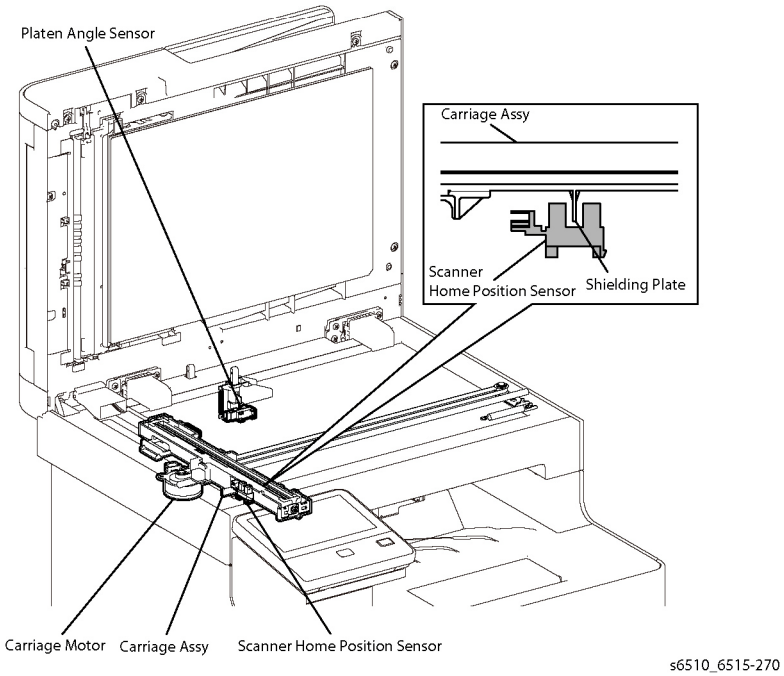

Figure 16 Scanner IIT Function

IIT ASSY PL 50.1 Item 2

- Carriage Motor (Scanner Motor)

  The stepping motor that drives the Carriage Assy.
- Scanner Home Position Sensor (CVT Position)

  As part of the rear side of the Carriage Assembly frame, the sensor functions as an actuator and blocks the light on the Scanner Home Position Sensor, thus detecting the registration position. This sensor detects the home position of the Carriage Assembly. When the Carriage Assembly is in the home position, the light is shielded, and when not in the home position, the light is unshielded.
- Platen Angle Sensor

  Detects when the platen is open/closed.

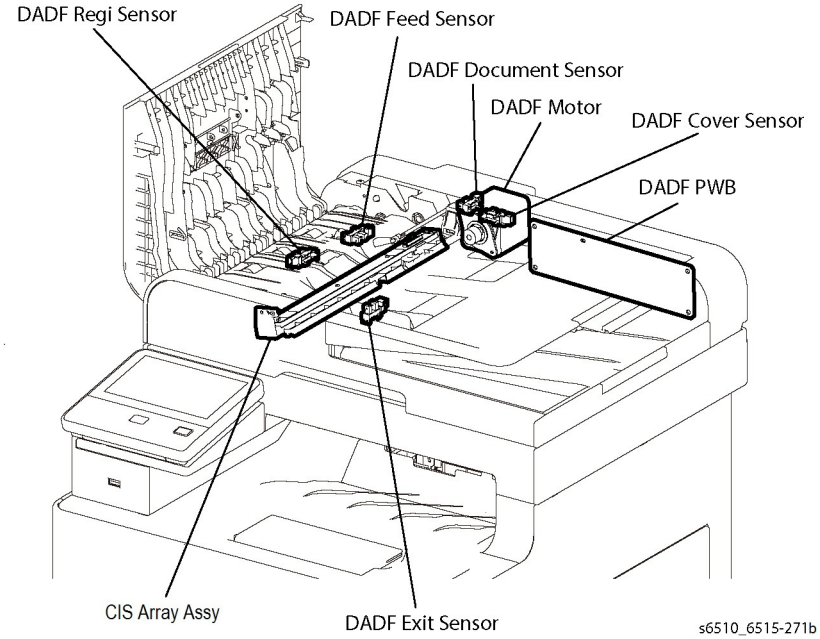

Figure 17 Scanner DADF Function

DADF ASSY PL 50.1 Item 1

- DADF Document Sensor

  A sensor that detects when a document is present or absent on the DADF Feeder Tray.

  (Document present: light on sensor) (Document absent: no light on sensor)
- DADF Cover Sensor

  A sensor that detects whether or not the DADF Top Cover is open.

  (Open: entrance of light) (Closed: No entrance of light)
- DADF Feed Sensor

  Located near the side of the DADF Feed Roll and detects the paper passing.

  (Paper present: entrance of light) (Paper absent: No entrance of light)
- DADF Regi Sensor

  Located near side of the DADF Regi Roll and detects the paper passing.

  (Paper present: entrance of light) (Paper absent: No entrance of light)
- DADF Motor

  The DADF Motor rotates the DADF Nudger Roll, DADF Feed Roll, DADF Takeaway Roll, DADF Regi Roll, DADF Transport Roll, and DADF Exit Roll.
- CIS Array Assembly

  Scans the image on the back side of the document in the duplex mode.

- DADF Board

  Controls the whole DADF system.

- Document Stopper

  When a document is loaded in the DADF, the Document Stopper is locked to prevent the document from being moved forward.

  When the DADF starts feeding, the front portion of the Pickup Assembly is lowered. This unlocks the Document Stopper that blocks the document. When the Document Stopper is pressed by the lead edge of the document in the feed direction, the document is fed. When the paper feed is completed, the Pickup Assembly returns to its original position.

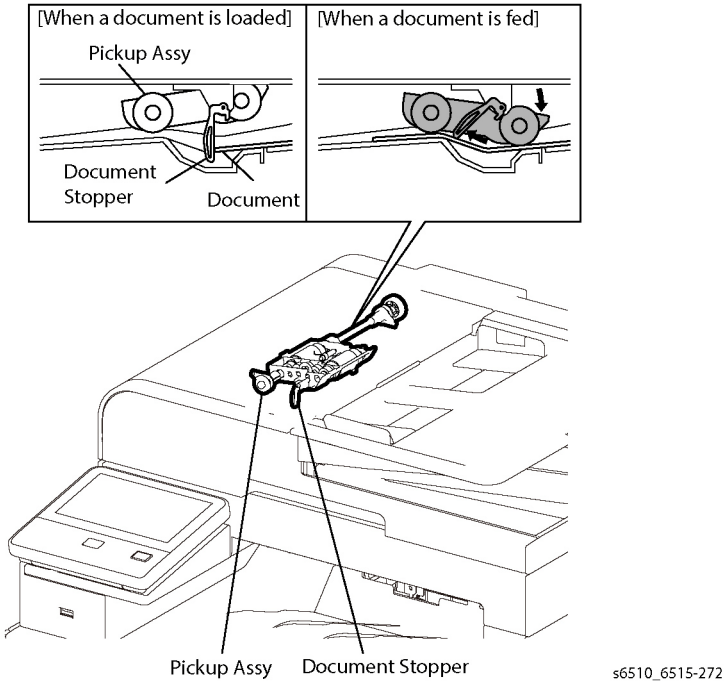

Figure 18 Document Stopper Function

- DADF Pinch Roll

  The DADF Pinch Roll is normally pressed against the direction of the DADF Takeaway Roll by the spring pressure.

  Documents are fed between the DADF Pinch Roll and the DADF Takeaway Roll to the CVT Window by the rotation of the DADF Takeaway Roll.

  If a jam occurs between the DADF Pinch Roll and the DADF Takeaway Roll, it is hard to retrieve documents due to the high spring pressure of DADF Pinch Roll.

  To retrieve jammed documents, open the DADF Top Cover to release the spring pressure, and make enough clearance between the DADF Pinch Roll and the DADF Takeaway Roll.

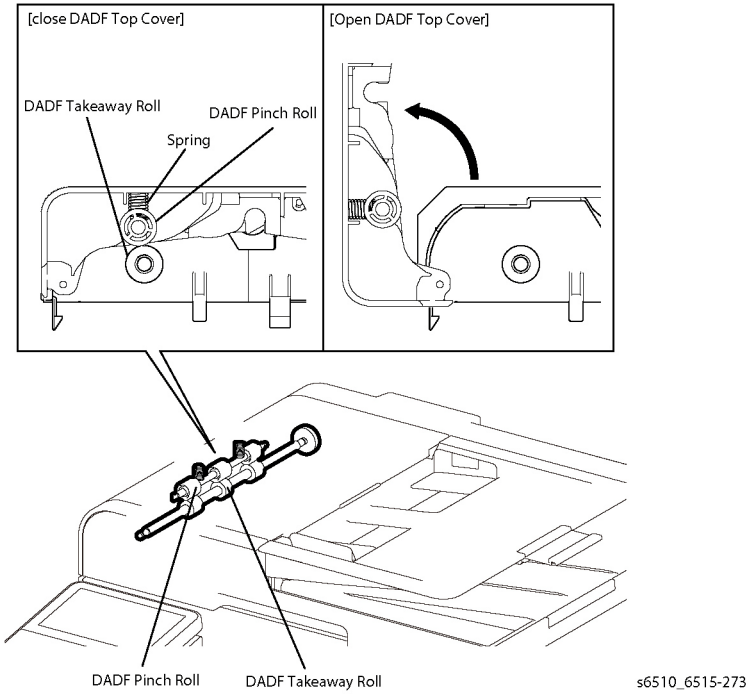

Figure 19 DADF Pinch Roll Function

Control

This section describes the components that control the printer processes, color registration, fusing, and scanning.

Process Control

Process Control

The parameters related to image formation must be corrected to stabilize printing. This control involves the entire printing process including the parameter correction control. The process control is performed by the following two methods after every 30 cumulative prints upon termination of a print run or during a continuous run:

- Potential Control
- Toner Density Control

To supplement these two controls, the following controls are provided:

- High Area Coverage Mode
- Admix Mode

Potential Control

To stabilize the print image density, the drum charging voltage, the developing DC voltage, and the LED light amount of the LPH are adjusted according to the ever-changing developing capability of each color developer. The adjusted drum charging voltage, the developing DC voltage, and the LED light amount of the LPH are fed back to keep the print image density constant.

The Potential Control follows this process:

1. SENSOR HUM AND TEMP (Hum. and Tem. Sensor) detects the temperature and humidity.
2. The patches of respective colors (yellow, magenta, cyan, and black) for the potential control are generated and transferred onto the Belt.
3. The ADC Sensor (density sensor) detects the density of the patches on the Belt.
4. The drum charging voltage, the developing DC voltage, and the LED light amount of the LPH are adjusted for each color according to the detected patch density.

Toner Density Control

The toner density must be kept constant to stabilize the print image quality. The control system for this purpose is called toner density control and includes the following:

- ICDC (Image Count Dispense Control)

  The quantity of the toner to be consumed in the developing process is calculated in terms of toner-dispensing time based on the quantity of the video signals that have been input to the LPH. The amount of the toner to be fed to the developer section is controlled by turning on the Toner Motor for the toner-dispensing time thus calculated.
- ADC (Auto Density Control)

  The patches of respective colors (yellow, magenta, cyan, and black) for the toner density control are generated under the specified potential condition, and then transferred onto the Belt. The ADC Sensor measures the densities of these patches and compares them with the reference value. If the toner density is lower than the reference value, the toner dispense quantity is increased at the next printing. If the toner density is higher than the reference value, the toner dispense quantity is reduced at the next printing. The toner dispense quantity is calculated in terms of the toner-dispensing time on a color-by-color basis.

High Area Coverage Mode

A continuous printing of data involving high area coverage exceeding the extra toner dispense capability causes the toner density in the developer to be lowered. The High Area Coverage Mode postpones the next page feed and dispenses the toner during this time if the toner dispense time has reached the specified value during a continuous printing.

Admix Mode

This mode executes extra toner dispensation to prevent the toner density from being lowered whenever the value of the toner density control patch measured by the ADC Sensor falls far below the reference value. If the toner density level cannot be recovered even after this operation, the control determines that the toner has run out.

ADC Sensor Adjustment

The ADC Sensor is a reflection type sensor that irradiates the light from its LED onto the target, detects the reflected light at its photoreceptor, and outputs electric signals responsive to the amount of the detected light. To ensure an accurate patch density measurement, clean the ADC Sensor surfaces to remove soil due to toner, or other contaminants. The light quantity adjustment is made so that the reflected light quantity satisfies the predetermined value when the patch for potential control and toner density control are created.

Color Registration Control

The printer uses a tandem system where the drums and developers are arranged respectively for each of yellow, magenta, cyan, and black colors. Since the four color-separated images overlay one another on the print medium, a color shift may occur. The color registration control calculates how much the registration is shifted, and adjusts the LPH write timing. The lateral registration control adjusts all of the four colors in lateral directions.

The color registration control is executed during a process control based on the change in the internal temperature and the print count.

The Color Registration Control follows this process:

1. With no toner except for K toner patch on the Belt, the output values of the R-RAD Low Sensor and the R-RAD Sensor are measured to determine the threshold value and the light intensity value.
2. The patch for color registration control is generated on the Belt. This patch comprises four cycles of a color pattern, each containing 2.5mm wide color horizontal lines and diagonal lines followed by K, Y, K, M, K, and C.
3. The density of the patch is measured by the R-RAD Low Sensor and the R-RAD Sensor.
4. The shift correction amount is calculated from the threshold value determined in step 1 and the patch density measured in step 3.
5. The LPH write timing is changed according to the shift correction amount.

Fuser Assembly Control

Fuser Assembly Temperature Control

To control the Fuser Assembly temperature, the target temperature is set, and then the Heater Lamp is turned on/off so that the surface temperature of the Heat Roll satisfies the target value.

The surface temperature of the Heat Roll is detected by the Temp. Sensor (STS = Soft Touch Sensor) in the middle of the Heat Roll and the Temp. Sensors (STS) at the end sections. When the temperature detected is higher than the target value, the Heater Lamp is turned OFF. When the temperature is below the target value, the Heater Lamp is turned ON.

However, the STS may detect a temperature lower than the actual value when an error occurs during the temperature detection. To prevent, in such a case, the Heater Lamp from activating for an excessive duration causing the Fuser Assembly to melt or burn, the Heater Lamp is turned off unless Warm-up is completed within the specified time.

The target temperature varies depending on the printer status such as Warm-up, Printing, or Process Control, and is calibrated according to the interior temperature detected by the Sensor Hum Temp, the temperature difference between the middle and the ends of the Heat Roll, the printing mode, and the input power supply voltage.

Cooling Down

As the printing continues, the temperature of the Heat Roll becomes nonuniform between the area that contacts the sheet and the area that does not. In such a case, the paper feeding is suspended for a certain duration to compensate for the temperature non uniformity of the Heat Roll. This is called Cooling Down. When the temperature of the Heat Roll end is high, cooling down is performed to lower the temperature to the target value.

Document Scanning Steps

A CCD Image Sensor is used to read image data from the document. To ensure stabilized image reading, the CCD Image Sensor output is adjusted. Adjustment includes Automatic Gain Control (AGC) and Automatic Offset Control (AOC).

Reference data for adjustment is collected and used to perform compensation on the read image data. Reference data is obtained by reading image data from a white reference plate via the CCD image sensor. Compensation includes shading compensation, white variation compensation, and black variation compensation. These adjustment and compensation steps are described as follows:

- AGC (Auto Gain Control): White Level Variation Adjustment

  During AGC, the Scanner ASSY is moved to the position of the white reference plate, and the Exposure Lamp is illuminated. The light reflected from the white reference plate is read by the CMOS Image Sensor as the white reference value, which is used to adjust CMOS Image Sensor output.
- AOC (Auto Offset Control)

  AOC is performed by turning off the Exposure Lamp after AGC. This state is read by the CMOS Image Sensor as the black reference value, which is used to adjust CMOS Image Sensor output. (The order of AGC and AOC adjustment depends on the model.)
- Shading Compensation

  Shading compensation compensates for pixel-by-pixel sensitivity variations and the non uniformity of lamp light in the fast scanning direction. The AGC and AOC adjustment values are used to compensate for the image data read by the CCD Image Sensor.

System Configuration

The PWBA ESS MFP controls the FAX, Scanner, and DADF. FAX and copy operations are performed according to data entered at the operation panel.

Figure 1 shows the system configuration:

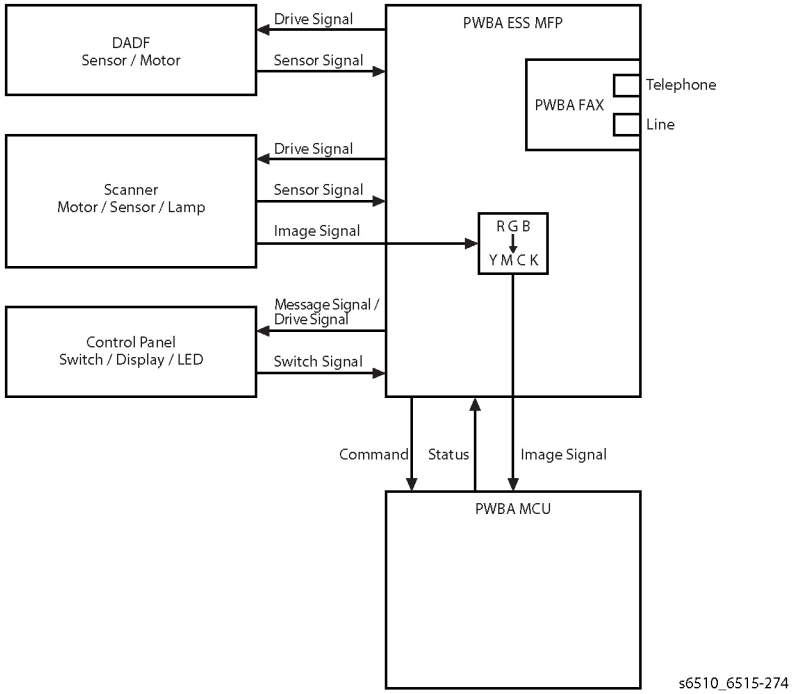

Figure 1 System Configuration

Drive Transmission Route

This section describes the drive transmission between the motors and gears.

Paper Feed (MSI to Registration)

Figure 1 shows the drive transmission from the MSI section to the registration section, where the rolls and gears are driven by the Main Motor.

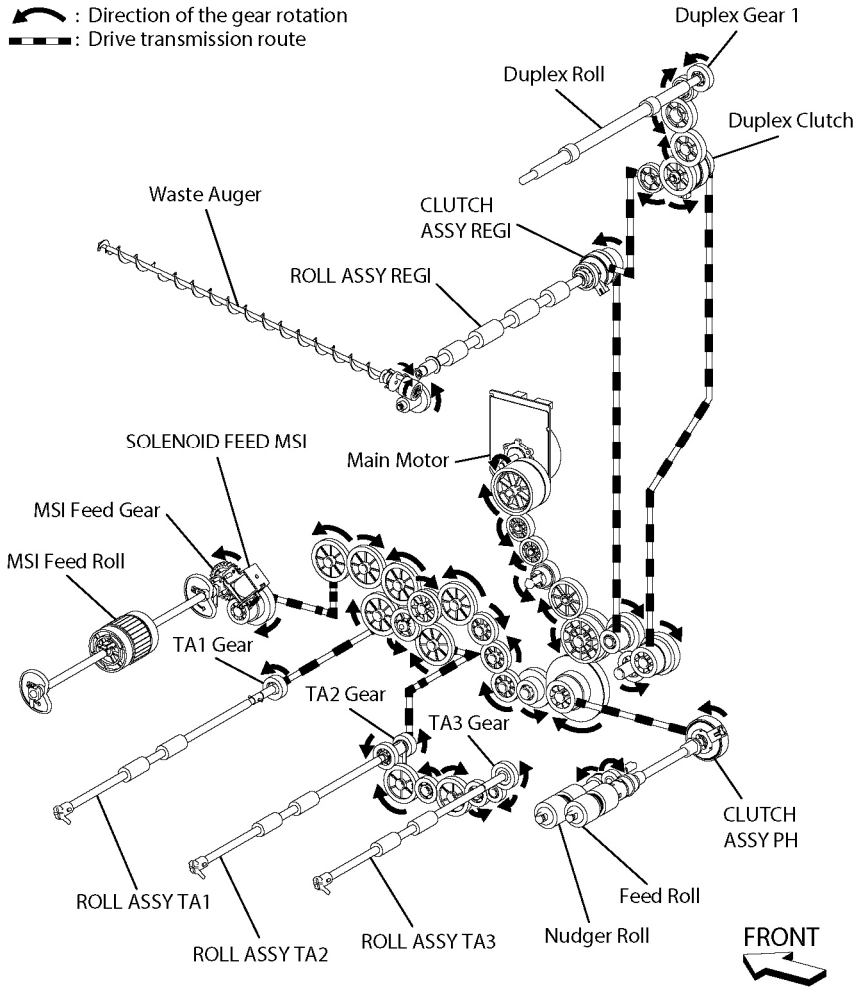

Figure 1 Paper Feed (MSI to Registration)

Paper Feed (Fuser to Exit)

Figure 2 shows the drive transmission from the Fuser section to the exit section, where the rolls and gears are driven by the Main Motor.

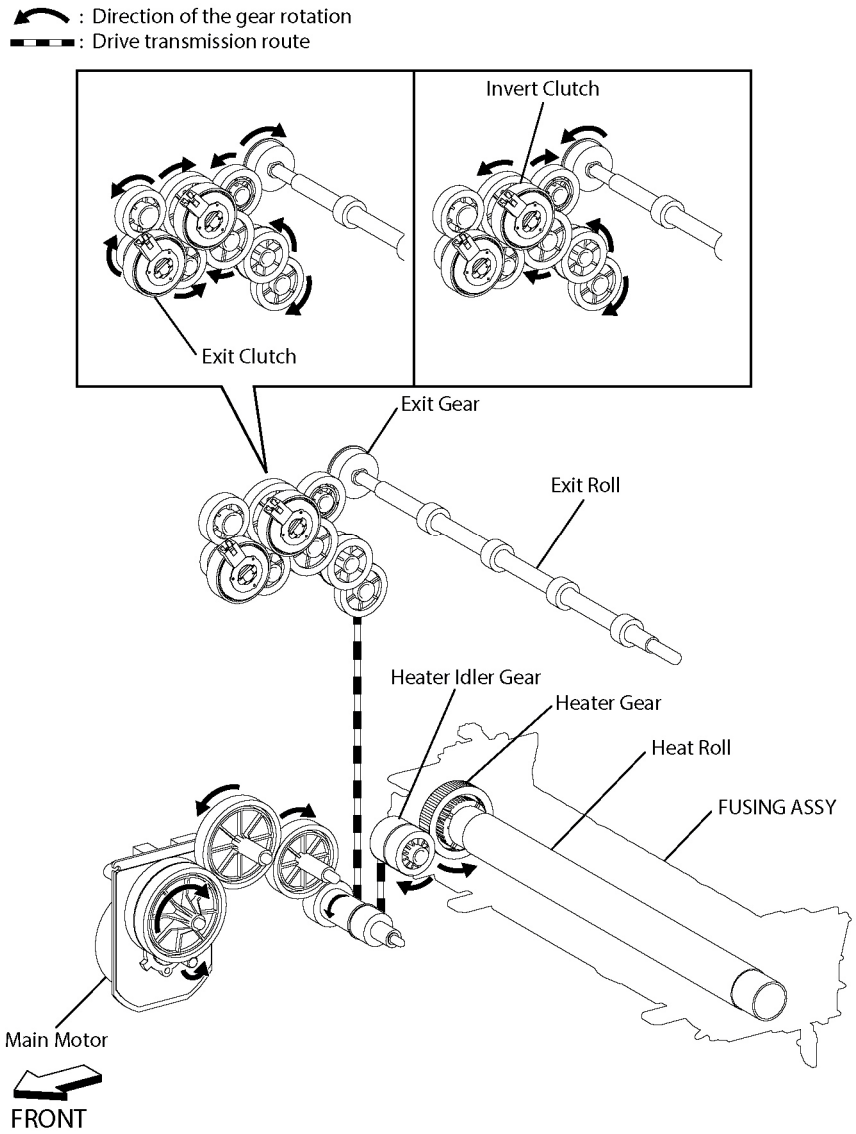

Figure 2 Paper Feed (Fuser to Exit)

Drum and Transfer Belt Feed

Figure 3 shows the drive transmission of the Drum and the Transfer Belt. The Main Motor drives the rolls and gears of the Drum (K) and the Transfer Belt. The Sub Motor drives the rolls and gears of the Drums (Y/M/C).

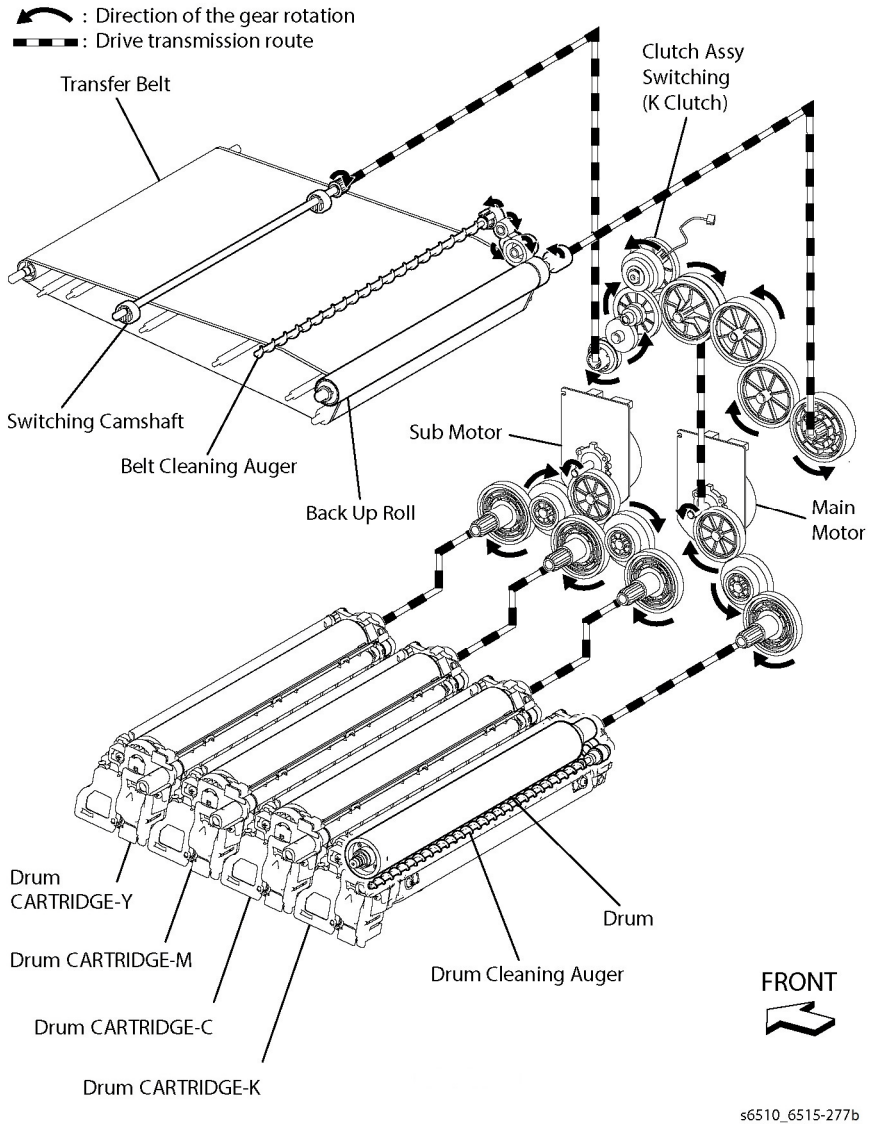

Figure 3 Drum and Transfer Belt Feed

Development Feed

Figure 4 and Figure 5 show the drive transmission of the development components for full color mode and for monochrome mode. The Main Motor drives the rolls and gears of the development components (K). The Sub Motor drives the rolls and gears of the development components (Y/M/C)

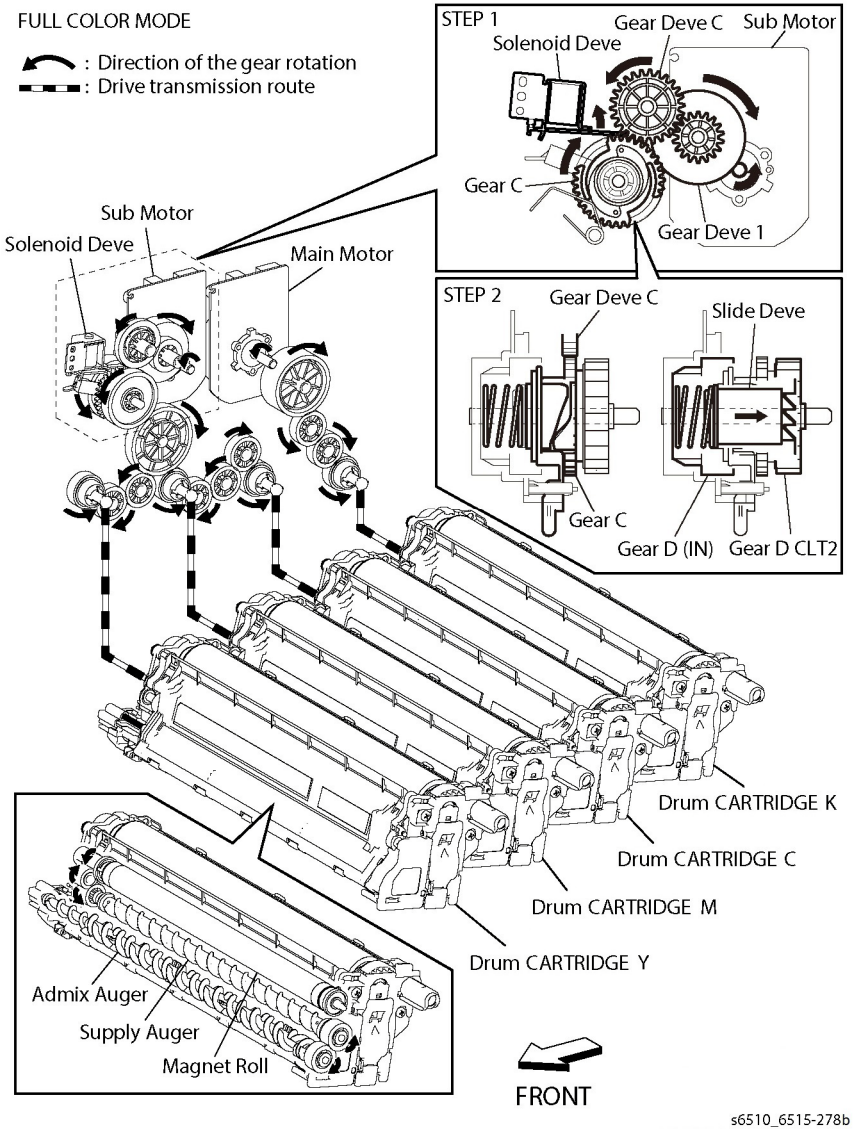

Figure 4 Development Feed Color Mode

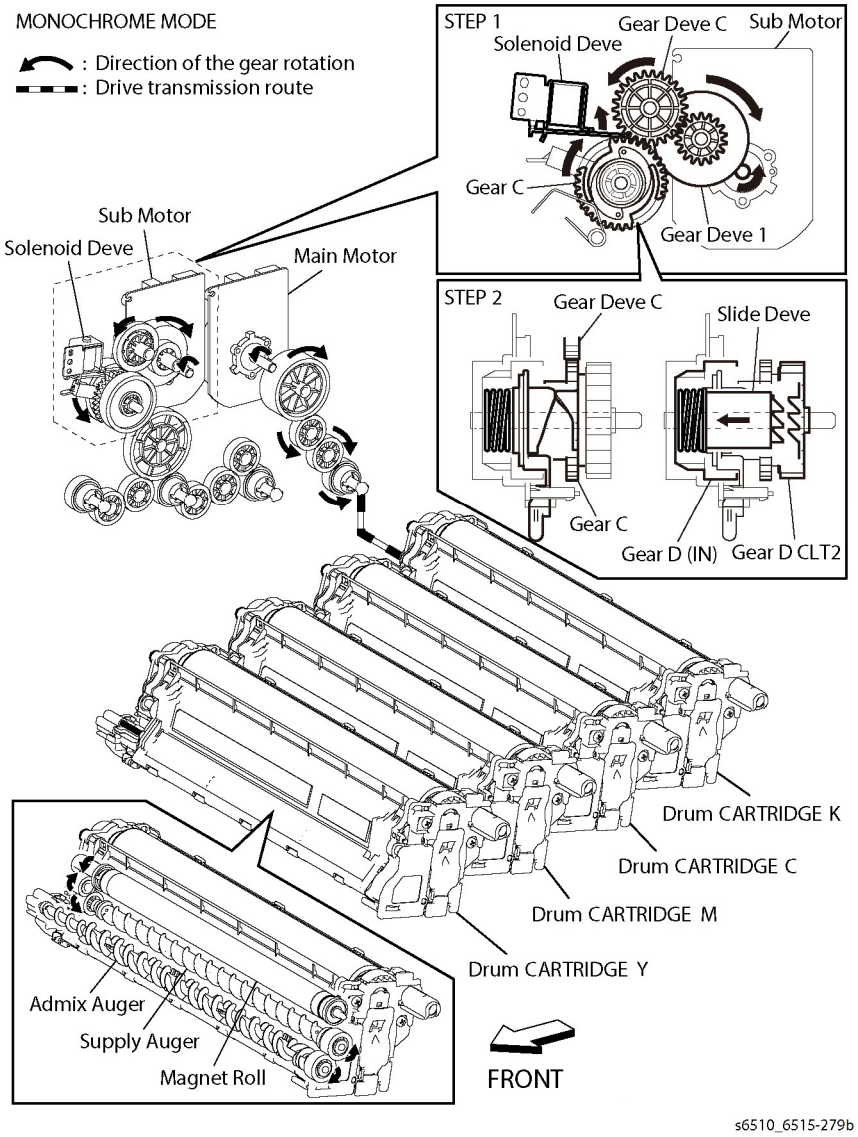

Figure 5 Development Feed Monochrome Mode

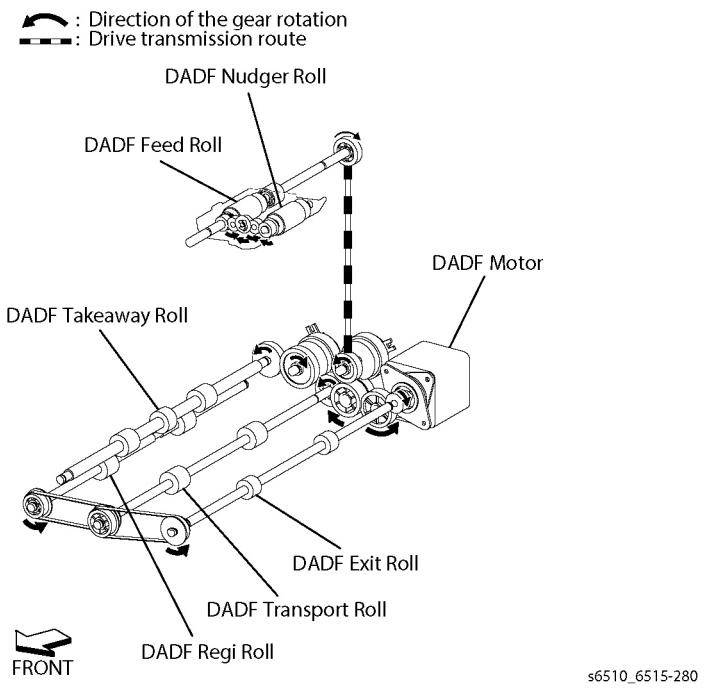

Figure 6 DADF Motor

DADF Motor

Figure 6 shows the drive transmission route from the DADF Motor to each roller.

Options for the Phaser 6510 and WorkCentre 6515

Phaser 6510 and WorkCentre 6515 options add media capacity, and functionality.

This section describes in detail the media path, sensors, major assemblies, and operational characteristics for each of these options.

- 550-Sheet Feeder
- Wireless Adaptor

The options are documented in their respective installation instructions.

Option Feeder and Cassette Functionality

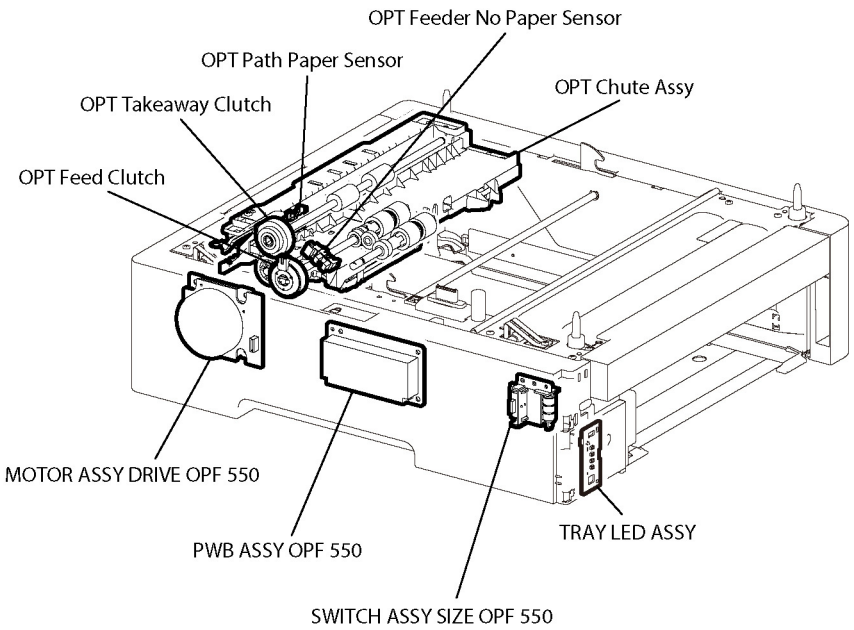

Figure 1 Option Feeder Functions

PWB ASSY OPF 550 (PL 10.1 Item 11)

Controls each component in the optional tray.

OPT Takeaway Clutch

Transfers the 550 OPF Motor Drive output to the 550 OPT TA Roller Assembly.

MOTOR ASSY DRIVE OPF 550 (PL 10.1 Item 18)

The DC motor that drives each roll of the paper feed section in the optional tray.

OPT Chute Assembly

The OPT Chute Assembly mainly consists of the following components:

- OPT Feeder No Paper Sensor

  Based on actuator position, sensor detects the presence or absence of paper in the paper cassette.
- OPT Paper Path Sensor

  Detects that a lead edge of a sheet reached the registration section.

OPT Feed Clutch

Transfers the 550 OPF Motor Drive output to the 550 OPT TA Roller Assembly.

TRAY LED ASSY PL 10.1 Item 22

Not used.

SWITCH ASSY SIZE OPF 550 PL 10.1 Item 12

Detects paper size, and presence or absence of paper in the 550 paper cassette.

Load paper in the paper cassette, and adjust the Left Guide Assembly, Right Guide Assembly, and End Guide Assembly to the paper size. Linked with the End Guide Assembly, the position of the Size Slot Plate is changed, and the three Size Actuators on the side of the cassette depress the Size Switch Assembly. The detected paper size corresponds to the combination of actuators depressing the Size Switch.

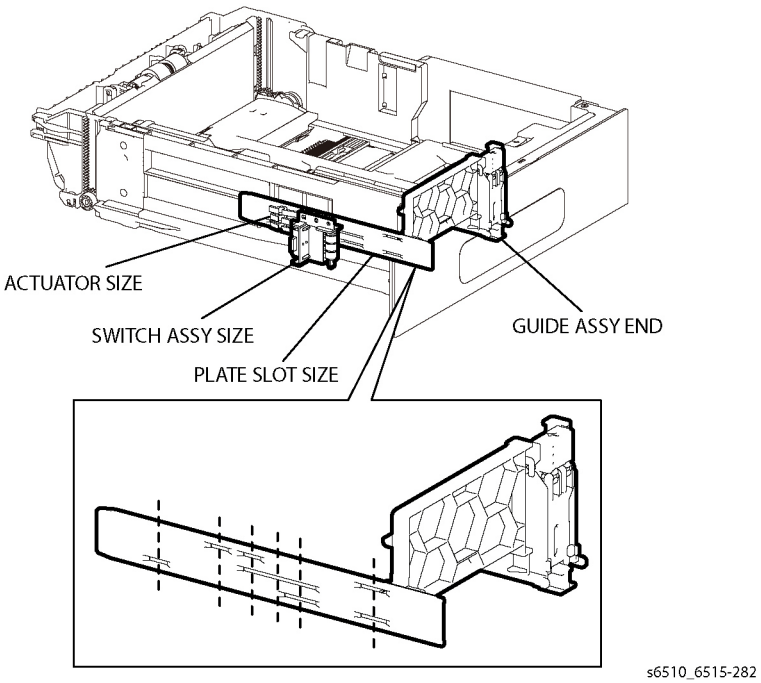

Figure 2 Option Feeder Size Switch

Copyright © 2016, Xerox Corporation.
All rights reserved. Unpublished
rights reserved under the copyright
laws of the United States.

Part#: 705P01382